City of Deltona

Mayor
John Masiarczyk

Vice Mayor
Chris Nabicht
District 6

Commissioners:

Mitch Honaker
District 1

Anita Bradford
District 2

Heidi Herzberg
District 3

Christopher Alcantara
District 4

Brian Soukup
District 5

City Manager
Jane K. Shang

PUBLIC NOTICE

CITY OF DELTONA
2345 Providence Blvd.
Deltona, FL 32725

City Manager Agenda Review Meeting
2nd Floor Conference Room
Monday, December 12, 2016
5:30 P.M.

NOTE: If any person decides to appeal any decision made by the City Commission with respect to any matter considered at this meeting or hearing, he/she will need a record of the proceedings, and for such purpose he/she may need to ensure that a verbatim record of the proceedings is made, which record includes the testimony and evidence upon which the appeal is to be based (F.S. 286.0105).

Individuals with disabilities needing assistance to participate in any of these proceedings should contact the City Clerk, Joyce Raftery 48 hours in advance of the meeting date and time at (386) 878-8500.

City of Deltona

2345 Providence Blvd.
Deltona, FL 32725

Regular Commission Meeting

City Commission

Mayor John C. Masiarczyk Sr.
Vice Mayor Chris Nabicht
Commissioner Christopher Alcantara
Commissioner Anita Bradford
Commissioner Heidi Herzberg
Commissioner Gary Mitch Honaker
Commissioner Brian Soukup

Monday, December 12, 2016 | **6:30 PM** | **Deltona Commission Chambers**

1. CALL TO ORDER:

2. ROLL CALL – CITY CLERK:

3. INVOCATION AND PLEDGE TO THE FLAG:

A. Invocation Presented by Commissioner Herzberg

Background: At the Regular City Commission Meeting on Monday, October 17, 2011, the City Commission approved to have each Commissioner by District schedule someone to present the invocation at each Regular City Commission meeting rotating each Commissioner by District starting with District #1, #2, #3, #4, #5, #6 and the Mayor

4. APPROVAL OF MINUTES & AGENDA:

A. Approval of minutes - Regular Commission Meeting of November 21, 2016, as presented. - Joyce Raftery, City Clerk (386) 878-8502.

Background: N/A

Attachments: November 21, 2016 Minutes

5. PRESENTATIONS/AWARDS/REPORTS:

A. Proclamation - Alberto Gómez-Gómez Day

Attachments: Alberto Gomez-Gomez

B. Recognition to Nina Ehmer, winner of the “My City: I’m Part of It, I’m Proud of It” photo contest

Background: Nina Ehmer’s photo of the Lake Monroe boat launch was taken

around 5:30 p.m., Dec. 15, 2015, using an Olympus E3 Digital SLR with a 12-60 mm lens. Ehmer always had a “mild interest” in photography but became serious about in 2014 when she received her first digital camera. Ehmer says she liked the idea of not having to deal with film and the instant gratification of being able to view images right away. She began to look at other photographers’ work online and began to read more about photography. She and her husband Howard live in the house they originally built here in Deltona on Lake Theresa in 1986. They live in a wooded environment that encourages a variety of wildlife. Her favorite subjects are birds, butterflies, and the resident family of sandhill cranes. The Ehmers have several butterfly and hummingbird gardens she also photographs. In late 2004, she began selling her photos at the New Smyrna Beach Farmers Market (usually happens October through April). To see more of her photos, visit ninaehmer.com.

Attachments: Nina Ehmer

C. Super Star Student of the Month Certificates for November 2016

Background: Super Star Student of the Month awards for November 2016 will be presented to:

1. Deltona Lakes Elementary, Jadiel Cruz, 1st Grade
2. Discovery Elementary, William Marte, 5th Grade
3. Enterprise Elementary, Delaney Mullins, 2nd Grade
4. Forest Lake Elementary, Elisa-Rae Fantauzzi, 1st Grade
5. Friendship Elementary, Morgan Saavedra, 5th Grade
6. Pride Elementary, Shane LeeKam, Kindergarten
7. Spirit Elementary, Briana Gutierrez, 3rd Grade
8. Sunrise Elementary, Rece Watters, 2nd Grade
9. Timbercrest Elementary, Miguel Sanchez, 1st Grade
10. Deltona Middle, Danali Rivera, 8th Grade
11. Galaxy Middle, Kayla Crespo, 8th Grade
12. Heritage Middle, Leandra Morales, 8th Grade
13. Deltona High, Dayne Ford, 10th Grade
14. Pine Ridge High, Naiomi Latorre, 12th Grade
15. University High, Savannah Yilk, 12th Grade

Attachments: Nov 2016 Super Star Student Achievements

6. CITY COMMISSION SPECIAL REPORTS:

7. PUBLIC FORUM: - Citizen comments limited to items not on the agenda and comments on items listed on the agenda will take place after discussion of each item.

Citizen comments for any items. (4 minute maximum length per speaker)

CONSENT AGENDA: The consent agenda contains items that have been determined to be routine and non-controversial. If anyone in the audience wishes to address a particular item on the consent agenda, now is the opportunity for you to do so. Additionally, if staff or members of the City Commission wish to speak on a consent item, they have the same opportunity.

8. CONSENT AGENDA:

A. Approval of agreement with the County of Volusia for Municipal Transport Program - Bill Snyder, Fire Chief (386) 575-6902

Strategic Goal: Public Safety - pursue the ability of the City to be able to provide medical transport.

Background: The fire department has been working with the county to expand the current medical transport agreement. Our current agreement allows us to transport on a contingency basis. This means that if we arrive at the scene of a critical patient, determine there is an immediate need to transport and the County transport unit is more than 10 minutes away we can transport. The expansion would allow the city to participate in the county's PLUS (Peak Load Utilization System) program. This would allow the city to continue to transport on a contingency basis, but also allow us to transport on a primary basis when the county's system is overloaded and we are requested by the county. A PLUS transport would occur when the county's transport unit is going to have a long delay or they have no units available. They would then dispatch our rescue unit to transport on both emergency and non-emergency calls. This expansion would allow the fire department to be there for our citizens when the county system is overloaded. Currently, the county will not entertain any agreement that allows the city to transport as the primary unit except under the PLUS program. The county is working with the cities that currently provide medical transport to all come under the PLUS program agreement.

Attachments: Application for Municipal Transport
Business Associate Agreement

B. Request for Approval of AFG Matching Grant

Background: The primary goal of the Assistance to Firefighters Grants (AFG) is to enhance the safety of the public and firefighters with respect to fire-related hazards by providing direct financial assistance to eligible fire departments, nonaffiliated Emergency Medical Services (EMS) organizations, and State Fire Training Academies (SFTA) for

critically needed resources to equip and train emergency personnel to recognized standards, enhance operations efficiencies, foster interoperability, and support community resilience.

This is a grant we apply for each year. This year we have applied for items in three categories: Equipment, Training, and Personal Protective Equipment. This year hazardous materials and chemical, biological, radiological, nuclear, and explosive (CBRNE) is a high priority for funding through FEMA. This being the case all of the items requested on the grant is for hazardous materials, technical rescue and/or CBRNE response. The total dollar amount we have requested for grant funding is $397,308.00 with the city's matching contribution of 10% or $39,731.00.

The requested equipment helps our special operations team become more in line with National Fire Protection Agency (NFPA) 471 Standard, the Occupational Safety and Health Administration (OSHA) Hazardous Materials standards, and other recognized national standard and best practices requirements. This equipment is expensive and needed to improve the overall effectiveness and safety of the members of our special operations team.

The training money requested brings our members up to NFPA 472 requirements as hazardous materials technicians. Since our team is a State recognized Light Technical Rescue Team (LTRT) we can be deployed throughout the state after a natural disaster such as a hurricane, tornado, etc. This training averages about $1500/person. This grant also covers training for structural collapse technicians which is necessary for our LTRT. Training props are also a part of the grant and affords our team members the ability to stay proficient in their hazmat skills as well as meet the mandatory recurrent training requirements of NFPA 472.
The personnel protective equipment brings us into compliance with the requirements of NFPA 1951 and 1999 for technical rescue and hazardous materials protective ensemble. Currently our team members are wearing their duty uniform which provides for limited protection against the environmental hazards during technical rescue special operations incidents.

Our special operations team responses to all special hazards operations, which includes hazardous materials, CBRNE, and technical rescue events, within our local jurisdiction. We also respond outside our jurisdiction providing special operations services to our surrounding communities. In the city of Deltona we have several special hazards in the city such as natural gas pipeline on the southern end of the city, Interstate 4, and fuel stations with high ethanol fuel. In the surrounding communities we have operating

power plants, CSX railways, Amtrac, and the St Johns River.

In order to proceed with the grant, we are requesting approval to proceed with submittal of the grant and the city approving 10% investment. We believe this will enhance the safety of our community and our members.

Attachments: AFG entire application 2016-special ops

C. Request approval of the budget amendment for the Saxon Stormwater Vault Pump Station (non-sewer), Matt Doan, P.E., Acting Public Works Director, (386) 878-8973.

Strategic Goal: Fiscal Issues

Background: The Florida Department of Transportation (FDOT) is planning to implement improvements at the intersection of Interstate 4 (I-4) and Saxon Boulevard within the City of Deltona (City). The City intends to partner with the FDOT to capture and treat the runoff related to these improvements.

The City will design and permit a pump station and associated stormwater force main to divert the water to its regional water management site located at Alexander Avenue. The stormwater vault will be located at the northwest corner of the intersection of Saxon Boulevard and Finland Drive. The stormwater force main will connect to a newly constructed pump station in the stormwater vault and discharge at the Alexander Avenue Site approximately 2.75 miles away.

Funds are available in the Fund Balance.

Attachments: SaxonVaultStormPS_FM-Scope_112916
SaxonVaultStormPS_TA_112916
SW Budget Amendment

D. Request for approval of the Hawksley Consulting Inc. Agreement, Matt Doan, P.E., Acting Public Works Director, (386) 878-8973.

Strategic Goal: Fiscal Issues

Background: In 2008 the City Commission approved Burton & Associates Inc. for Consulting Services for a Water, Wastewater and Reclaimed Water Rates and Charges Study in accordance with a City of Deltona RFQ#0841. This Study allowed for a review of the current rates and a determination of future rates. Staff received five responses to RFQ#0841. Burton and Associates Inc. was ranked the highest by the Selection Committee.

On October 24, 2012 the City Commission approved Resolution No. 2012-35 and directed Staff to hire a rate consultant for purposes of both fulfilling the need for a rate consultant for the upcoming Swaption refinance, as well as explore rate options that would bring relief to the current sewer customers. It was noted that The City of Plant City recently awarded a contract for a Water and Wastewater Rate Study to be completed by Burton & Associates Inc. through RFP 12-9466-001. As Burton & Associates Inc. conducted the original rate study for Deltona Water in 2008 and had also worked with the City's current Financial Advisor, FirstSouthwest, on previous occasions. Burton & Associates Inc. was contacted to determine if they can not only meet the needs required by FirstSouthwest, but also be flexible to try several alternative rate scenarios in an effort to provide relief to our sewer customers. Burton & Associates Inc. submitted a proposal, tailored to the City of Deltona, stating that they feel that they could meet our requirements and have preliminary results back within 60 days of receiving a notice to proceed and a full report completed within 90 days. Burton & Associates Inc. created a model that was able to provide "what if" scenarios that allow the City to explore different rate options and determine their results instantaneously. They also provide one on one meeting with City Staff and the City Commission also take place along with a presentation of the rate study update at a City Commission Workshop.

In 2015 and 2016 Burton & Associates Inc. provided the the same services via a proposal. The Proposal was tailored to the City of Deltona and Burton & Associates Inc. was used as a Standardized Vendor.

The City of Deltona would like to request the services of Burton and Associates Inc. a subsidiary of Hawksley Consulting for Water, Wastewater and Reclaimed Water Rate Study and Financial Management Services. A proposal has been submitted and attached as Exhibit A. We believe to seek out other firms to provide this service and future rate studies would be cost prohibitive; as new firms would need to essentially re-create a model from scratch whereas Hawksley Consulting Inc. only requires updating the parameters that are currently in place. Staff is requesting the approval of the agreement with Hawksley Consulting Inc. the successor in interest to Burton and Associates Inc. on an as needed basis for a period of two (2) years with three (3) additional one (1) year renewal options by mutual agreement of the parties.

Attachments: Financial Management Consulting Services Proposal_11.7
Hawksley Consulting Inc_Agreement Final
Burton & Associates a subsidiary of Hawksley Consulting

E. Annual Renewal of STD/LTD Plans

Background: Short Term Disability and Long Term Disability plans are up for annual renewal. Rates have not changed in 3 years. Recent claims history has dictated a rate change to the Short Term Disability rates.

Attachments: City of Deltona STD LTD Rates 2017
City of Deltona Experience 10-21-2016 uw 3yr
City of Deltona Experience 10-21-2016 uw 3yr A

9. ORDINANCES AND PUBLIC HEARINGS:

A. Public Hearing - Ordinance No. 28-2016, Amending Chapter 94, Impact Fees, of the Land Development Code, and the City's Impact Fee Schedule for Fire/Rescue, Parks, Transportation, and Law Enforcement, at first reading - Chris Bowley, AICP, Planning and Development Services, (386) 878-8602.

Strategic Goal: Other Priority Objectives Identified - Maintain a balanced budget, reserves, and investments.

Background: Chapter 163.31801, Florida Statutes (FS), allows a local governments to levy impact fees to off-set "impacts" as a result of new growth. Specifically, the statutes list that impact fees are *"to use in funding the infrastructure necessitated by new growth. The Legislature further finds that impact fees are an outgrowth of the home rule power of a local government to provide certain services within its jurisdiction."* The statute requires local governments to provide *"notice no less than 90 days before the effective date of an ordinance or resolution imposing a new or increased impact fee."* The second and final reading of the ordinance will comply with this law.

The City collects impact fees for increased intensity of land uses and has had moratoriums in the past to help businesses locate or expand within the City. With economic recovery, the City updated its impact fees for parks, fire rescue, law enforcement, and transportation fees (water and sewer impact fees are within Deltona Water). In 2007, the City had an impact fee study completed that created an extensive list of land uses and fees. Some development applications did not always match that adopted land use list. The series of adoptions of fees is included in the composite attachment (see attached).

In 2015, the City contracted Burton & Associates (Burton) to revisit the adopted impact fees and to create a simplified uniform land use list that reflects Deltona's land use pattern. The impact fees for fire/rescue and law enforcement were found to be comparable to local communities similar to Deltona and are recommended for adoption. The existing parks impact fee is higher than comparative communities and Burton recommends keeping the current parks fee. The proposed transportation impact fees from Burton for some land use categories is higher. The City Commission directed staff to revisit those fees and a comparative analysis was performed. The recommended impact fee schedule within the attached Ordinance No. 28-2016 is the result of that analysis. Where the Burton transportation fee was higher that average, the City's current fee is recommended to be kept for economic development. It is also recommended that City impact fees be reviewed at least every five (5) years to remain current and to minimize large increases. Finally, the Planning & Zoning Board reviewed Ordinance No. 28-2016 on November 16, 2016, and voted 5-0 (two members absent) for the City Commission to adopt the ordinance.

Attachments: Ord No. 28-2016 Impact Fees
Impact Fee Comparison Table
Existing Impact Fees Composite
Burton Impact Fee Study Report

B. Public Hearing - Ordinance No. 29-2016, Amending Chapter 102, Signs, of the Land Development Code, at first reading - Chris Bowley, AICP, Planning and Development Services, (386) 878-8602.

Strategic Goal: Public Safety - Sign ordinance amendment/rewrite the sign code.

Background: At the November 28, 2016, the City Commission Workshop, the City Commission discussed the proposed sign code and directed staff to meet again with the Deltona Business Alliance (DBA) on an updated sign code draft. Until that additional meeting with the DBA and rewrite occurs, Ordinance No. 29-2016 shall not be heard.

Attachments: Ord No. 29-2016 Signs 111716
Staff Report
Typical Signage Presentation

C. Public Hearing - Ordinance No. 32-2016, Rezoning ±1.67 acres located at 3151 Howland Blvd. from C-2 (General Commercial) to C-1 (Retail Commercial), at first reading - Ron A. Paradise, Assistant Director, Planning and Development Services (386) 878-8610.

Strategic Goal: Economic Development - focus on Howland Blvd. as a gateway for commercial growth.

Background: The subject property is known as the Jena Medical development (Jena Medical) complex and was used to house the Health Department offices. Jena Medical consists of three (3) office buildings surrounding by a parking lot. The facility now has vacant leasable area that has been difficult to fill. Therefore, the owner is requesting the property be rezoned from C-2 to C-1 to allow for a house of worship as a permitted use, which is interested in becoming a tenant. No daycare facility or other ancillary uses sometimes associated with churches are planned.

The requested C-1 zoning is consistent with the Comprehensive Plan, does not result in the creation of non-conforming uses and structures, and is compatible with existing commercial and institutional land uses (Deltona High School, four houses of worship) in the immediate area. For more information, including graphics, see the attached staff report. Through this action, the entire site is proposed to be rezoned.

Attachments:
Ord No. 32-2016 Jena Rezone
Staff Report
Location Map
Aerial Photo
Floodplain Map
Future Land Use Map
Existing Zoning
Proposed Zoning

D. Request for approval to transfer funds and position from the Legal Department to the Building and Enforcement Services Department - Dale Baker, Deputy City Manager 386-878-8852.

Strategic Goal: Internal and External Communications

Background: Originally the position who conducts lien searches and releases of liens was in the Building and Enforcement Services Department. In FY 10/11 the position was transferred to the Legal Department. With the upcoming retirement of Sheri Sallade we are proposing to transfer the position back to the Building and Enforcement Services Department along with the funding for the position. This transfer reduces the staffing level in the Legal Department by one (1) and increases the staffing level in Building and Enforcement Services by one (1). There is no net increase to the FY 16/17 budget as a result of the requested transfer.

Attachments: Resolution 2016-67 General Fund mid-year budget amend 2017-11

E. Request for Approval of Resolution No. 2016-68, Adopting the Facilities Plan, Capital Financing Plan, Certified Minutes from the Public Meeting held on November 15, 2016 and Authorizing submission of the Plan to the Florida Department of Environmental Protection (FDEP) for the Alexander Avenue Reclaimed Water Augmentation (known as Lake Monroe Project Phase 4A and 4B) - Matt Doan, P.E., Acting Public Works Director (386) 878-8973

Strategic Goal: Infrastructure

Background: As recently approved, the City of Deltona has entered into a cost share agreement with the St. Johns River Water Management District (SJRWMD) to secure available grant funding for the Lake Monroe Project Phase 4A and 4B.

The City of Deltona is seeking consideration for a low-interest State Revolving Fund (SRF) loan in the amount of approximately $13,267,000 based upon preliminary planning estimates, to facilitate funding of this project. This action supports the City's intent to secure the lowest cost funding available.

Adopting Resolution No. 2016-68 authorizes the following: Adoption of the Facilities Plan dated October 2016; Capital Financing Plan; Certified Minutes from the Public Meeting held on November 15, 2016; authorizes the submission of the Plan to FDEP; and designates the authorized representative and provides an effective date.

Attachments: Resolution No 2016-68 Alexander Ave Facility.pdf
Capital Financing Plan.pdf
Lake Monroe Public Information Meeting Nov 2016.pdf
Draft Facilities Plan - 112916

10. OLD BUSINESS:

11. NEW BUSINESS:

A. Request for approval of 2nd Amendment with Verizon Wireless for Land at Dewey Boster Park. CityScape, cell tower consultants. Jane K. Shang, City Manager (386) 878-8850

Strategic Goal: Fiscal Issues

Background: This is an extension of the Site Agreement for Land with Verizon Wireless for a cell tower construction at Dewey Boster Park located at 1190 Saxon Blvd. This cell tower provides cell tower services to residents and businesses in the areas near the tower. The extension provides annual revenue to the City in the amount of Twenty-Five Thousand Nine Hundred and Twenty Dollars ($25,920.00), with a 20% rent increase every five years. This agreement gives the City four (4) additional five (5) year renewal terms. This extension was negotiated by the City's cell tower consultant, CityScape. A representative of CityScape will be at the Commission meeting to discuss the extension and answer any questions anyone has regarding this agreement.

Attachments: 2nd Amendment Verizon Wireless
2000 Amendment to Site Agreement
1999 Memorandum of Site Agreement

B. Request for approval of First Amendment with T-Mobile South, LLC for Land and Co-Location on Tower located at Fire Station 63. CityScape, cell tower consultants. Jane K. Shang, City Manager (386) 878-8850.

Strategic Goal: Fiscal Issues

Background: This is an extension of the site agreement for land and co-location with T-Mobile for the cell tower located at Fire Station 63 at 2147 Howland Boulevard near Dupont Lakes. This cell tower provides cell tower services to residents and businesses in the areas near the tower. The extension provides annual revenue to the City in the amount of $22,812, with four (4) additional five (5) year renewal terms. Each year of the renewal term results in an increase in rent of three percent (3%) over the rent paid for the previous year. This extension was negotiated by the City's cell tower consultant, CityScape. A representative of CityScape will be at the meeting to discuss the extension and answer any questions anyone has regarding this agreement.

Attachments: A2A0435A 1st Amendment Final Draft
2001 Agreement - Station 63
2011-2016 Renewal Letter

C. Request for City of Deltona funds.

Background: The Commission discussed at several meetings the $35,000 discretionary fund which could be provided to non-profit organizations who applied for them. The Commission directed staff to come up with an application and guidelines for this funding which has been done.

Attached is a request from the West Volusia Wolves JV Cheerleading Squad for City funds in the amount of $2,500.00 to assist with event and travel expenses associated with the squad going to compete at the National level for Pop Warner.

Attachments: Request for City Funds

D. Public Hearing - Request for Approval of the Program Year 2015-2016 CDBG Consolidated Annual Action Performance and Evaluation Report (CAPER) - Ron Paradise, Assistant Director, Planning and Development Services, (386) 878-8610.

Strategic Goal: Internal and External Communication - Conduct a needs assessment for social services and communicate resources for public benefit.

Background: The U.S. Department of Housing and Urban Development (HUD), requires the CAPER to be submitted annually to remain federal grant compliant. The CAPER is a summary of City activities accomplished under Title 24 of the HUD-funded Community Development Block Grant (CDBG) program. The CAPER report is formulated in accordance with the regulations governing consolidated submissions (24 CFR 91.520) administered by HUD. The main purpose of the CAPER is also to report the City's proper use of HUD funds for activities and projects accomplished within the HUD program year (PY). For this PY, the majority of the activities include park improvements and public services for enhance and serve the community.

The CAPER is associated with the CDBG Five-Year Consolidated Plan (CP) that establishes strategic goals for City CDBG activities listed in the Annual Action Plan (AAP). The current CP for PY 2013-2017 and the AAP is updated annually to report the implementation of the CP for grant compliance and consistency. The CAPER consists of narratives and tables documenting the proper spending of grant funds and highlights efforts made by the City to improve its quality of life. Finally, in accordance with the required citizen participation plan, the City has observed a 15-day public comment period and no comments were received verbally or in writing during the period. The PY 2015-2106 CAPER is attached.

Attachments: Program Year 2015-2016 Consolidated Annual Performanc

12. CITY ATTORNEY COMMENTS:

13. CITY MANAGER COMMENTS:

14. CITY COMMISSION COMMENTS:

15. ADJOURNMENT:

NOTE: If any person decides to appeal any decision made by the City Commission with respect to any matter considered at this meeting or hearing, he/she will need a record of the proceedings, and for such purpose he/she may need to ensure that a verbatim record of the proceedings is made, which record includes the testimony and evidence upon which the appeal is to be based (F.S. 286.0105).

Individuals with disabilities needing assistance to participate in any of these proceedings should contact the City Clerk, Joyce Raftery 48 hours in advance of the meeting date and time at (386) 878-8500.

City of Deltona

2345 Providence Blvd.
Deltona, FL 32725

Agenda Memo

AGENDA ITEM: A.

TO: Mayor and Commission **AGENDA DATE:** 12/12/2016

FROM: Jane K. Shang, City Manager **AGENDA ITEM:** 3 - A

SUBJECT:
Invocation Presented by Commissioner Herzberg

LOCATION:
N/A

BACKGROUND:
At the Regular City Commission Meeting on Monday, October 17, 2011, the City Commission approved to have each Commissioner by District schedule someone to present the invocation at each Regular City Commission meeting rotating each Commissioner by District starting with District #1, #2, #3, #4, #5, #6 and the Mayor

COST:
N/A

SOURCE OF FUNDS:
N/A

ORIGINATING DEPARTMENT:
City Manager's Office

STAFF RECOMMENDATION PRESENTED BY:
N/A - Invocation Only

POTENTIAL MOTION:
N/A - Invocation Only

powered by Legistar™

City of Deltona

2345 Providence Blvd.
Deltona, FL 32725

Agenda Memo

AGENDA ITEM: A.

TO: Mayor and Commission **AGENDA DATE:** 12/12/2016

FROM: Jane K. Shang, City Manager **AGENDA ITEM:** 4 - A

SUBJECT:
Approval of minutes - Regular Commission Meeting of November 21, 2016, as presented. - Joyce Raftery, City Clerk (386) 878-8502.

LOCATION:
N/A

BACKGROUND:
N/A

COST:
N/A

SOURCE OF FUNDS:
N/A

ORIGINATING DEPARTMENT:
City Clerk's Office

STAFF RECOMMENDATION PRESENTED BY:
City Clerk Joyce Raftery - That the Commission approve the minutes of the Regular Commission Meeting of November 21, 2016, as presented.

POTENTIAL MOTION:
"I move to approve the minutes of the Regular Commission Meeting of November 21, 2016, as presented."

powered by Legistar™

City of Deltona

2345 Providence Blvd.
Deltona, FL 32725

Minutes

City Commission

Monday, November 21, 2016 **6:30 PM** **Deltona Commission Chambers**

1. CALL TO ORDER:

The meeting was called to order at 6:30 p.m. by Mayor Masiarczyk.

2. ROLL CALL – CITY CLERK:

Present: 7 - Commissioner Bradford
Commissioner Herzberg
Commissioner Honaker
Vice Mayor Nabicht
Mayor Masiarczyk
City Attorney Vose
City Manager Shang

Absent: 2 - Commissioner Alcantara
Commissioner Soukup

3. INVOCATION AND PLEDGE TO THE FLAG:

A. Invocation Presented by Commissioner Bradford - Pastor William Bradley with New Hope Baptist Church.

Commissioner Bradford introduced Pastor William Bradley with New Hope Baptist Church and she led everyone in the pledge to the flag.

The National Anthem was sung by Joy Tesis a 7th Grader with Deltona Middle School.

4. APPROVAL OF MINUTES & AGENDA:

A. Approval of minutes - Regular Commission Meeting of November 7, 2016 and Special Commission Meeting of November 14, 2016, as presented. - Joyce Raftery, City Clerk (386) 878-8502.

Motion by Commissioner Honaker, seconded by Commissioner Herzberg, to approve the minutes of the Regular Commission Meeting of November 7, 2016 and the Special Commission Meeting of November 14, 2016, as presented. The motion carried by the following vote:

For: 5 - Commissioner Bradford, Commissioner Herzberg, Commissioner Honaker, Vice Mayor Nabicht, and Mayor Masiarczyk

5. PRESENTATIONS/AWARDS/REPORTS:

A. Proclamation - Florence & Donald Smith Day

The Mayor and Commission presented a Proclamation to Florence & Donald Smith for their devotion, patriotic gifts, and time spent with the veterans living at the Deltona Health Care Facility.

6. CITY COMMISSION SPECIAL REPORTS:

Commissioner Herzberg spoke about attending the Sayfie Review, Florida Leaders' Summit in Orlando which was a two (2) day event that is put on by Justin Sayfie who does the Sayfie Review and updates for Tallahassee on a continual basis. One event included the speakers incoming Senate President Joe Negron and incoming House Speaker Richard Corcoran. She stated it will be interesting to see what happens this year as the incoming speaker is all about transparency, changing the way Lobbying is handled and the incoming Senate President is about Lake Okeechobee, water, storm water and is going to be making a continued push for water issues in the State of Florida, as well as the incoming speaker. She stated Tallahassee is a whole different level than local government and a lot of them have never been a local elected official or county council member so they do not understand or know that level of government. Also, some times the mandates do not impact them but, may effect a municipality. The Governor's priority this year is a pollution notice because of the Mosaic spill and this will have a huge impact on municipalities because it is a broad based measure. She suggested that the City look into a phone App similar to what Orange City has to report issues throughout the City, and she asked that the Commission continue to look at this. Issues like storm water runoff and water are going to be a big priority and it is up to the City at a local level to keep the residents informed but, to also understand what Tallahassee is bringing down for the City and what it means to us as a City. She stated on December 19th in the Commission Chambers will be the Volusia Legislative Delegation Meeting which Representative Santiago is the Chair of this year, it is from 1:00 p.m. to 5:00 p.m. and she encouraged everyone who has questions to sign up online and speak to their Delegation.

Commissioner Honaker spoke about Relay For Life fundraising event which will take place on March 30, 2017 and he spoke to Top Shelf Car Wash who will be donating $1 from every car they wash to Relay For Life.

Commissioner Bradford spoke about the kickoff for the Crumb's Toys For Tots event which she attended both Friday and Saturday night and she encouraged parents to bring their kids to the event to show them that it is just as important to give as it is to receive.

Vice Mayor Nabicht stated he will have a report at the next meeting from the

Transportation Planning Organization (TPO).

Commissioner Honaker stated he did not see a City team at the Relay For Life meeting where the jeans fundraiser was brought up and he hoped the City was still going to have that fundraiser because it raises a lot of money each year.

Mayor Masiarczyk stated he wanted to comment on the Crumb's Toys For Tots event; if you go down Eustace Avenue to Seagate Drive, to 2515 Walkertown Avenue to see that. He stated Mr. Crumb is the local representative for the United Stated Marine Corp. Toys For Tots drive. He stated he does an enormous amount of work and good will for the Marines, he has let his hair grow out which is snow white, he makes a close Santa and he encouraged everyone to go see his Christmas display, you will not be disappointed.

7. PUBLIC FORUM: - Citizen comments limited to items not on the agenda and comments on items listed on the agenda will take place after discussion of each item.

Jessica Kellie & Carrie Gabel, 1191 Wycuff Street, Deltona spoke about needing sponsorship in the amount of $15,000 for the West Volusia Wolves Cheerleaders to be able to attend the Pop Warner National Championship, the Commission presented the group last year with an award when they placed 4th at Nationals last year, most of the girls being honor roll students, having a short period of time to raise the money, membership fees being low to attract participants, and most of what the group does is through fundraising efforts.

Michael Putkowski, 2736 Courtland Blvd., Deltona, spoke about loving and respecting the Commission, the Commission having an open door, the recent actions on the dais hurting him to the core, that the City is changing and doing a lot for the community, there is now open communication, he encouraged the Commission to work things out, on the west side a social services program is going on which needs the City's support, that there is no housing or shelter for those who lose everything and this project helping those people and he encouraged the Commission to support the project in any way possible.

Christine Gallagher, Deltona Professional Firefighters Local 2913, spoke about beginning the 3rd Annual Deltona Toy Drive which helps shape children's Christmas memories, she provided a brief history of the program, that she has a list of families in need if anyone would like to sponsor a family, being willing to take the names of those employees who are in need, that collection boxes are at City Hall, Fire Stations and other City facilities, and if anyone has any questions contact herself or Emma Santiago with the Deltona Fire Department.

Larry Kent, 235 River Village Drive, Debary, thanked Commissioner Honaker for shadowing him during the permit process and he gave a brief explanation of what happened during that process, he suggested dismantling the Code Enforcement Department and recreating it, he suggested changing the Code Enforcement Department's name to Communication and Neighborhood Relations like Orlando, that

there is a City that has a system where code cases do not go to the Special Magistrate but, to a Citizen's Code of Appeals Board, and he suggested that the Commission listen to the Special Magistrate meetings.

Michael Williams, 2889 Cottageville Street, Deltona, spoke about his vote of confidence in the City Manager and City Attorney and he explained why, the many projects going on which will create new jobs for the City, that he and others support the City Manager, staying focused on what is happening in the City, the diversity in the City specifically with regards to the hiring process, the hiring process being fair and balanced, that a real medical hub is bring created, and getting people workforce trained.

John Viccaro, President, Deltona Professional Firefighters Local 2913, spoke about the silent majority having respect for the Commission, City issues that are in the paper, that he understands residents wanting to support certain causes, not supporting the behavior of insults, name calling and bullying which are unprofessional, the Union put in its contract to have a harmonious relationship with the City, wanting to move forward, for everyone to be a productive part of the City, wanting to see positive stories in the media, that he appreciates everything the City does and moving forward as the residents deserve it.

CONSENT AGENDA: The consent agenda contains items that have been determined to be routine and non-controversial. If anyone in the audience wishes to address a particular item on the consent agenda, now is the opportunity for you to do so. Additionally, if staff or members of the City Commission wish to speak on a consent item, they have the same opportunity.

8. CONSENT AGENDA:

Commissioner Honaker requested Item 8-A be removed from the Consent Agenda for discussion and the Commission concurred.

Motion by Commissioner Herzberg, seconded by Vice Mayor Nabicht, to approve Consent Agenda Item 8-B. The motion carried by the following vote:

For: 5 - Commissioner Bradford, Commissioner Herzberg, Commissioner Honaker, Vice Mayor Nabicht, and Mayor Masiarczyk

A. Request for approval of Cooperative Economic Agreement with Team Volusia Economic Development Corporation. Jerry Mayes, Economic Development Manager, (386) 878-8619.

Strategic Goals: Economic Development.

Motion by Vice Mayor Nabicht, seconded by Commissioner Herzberg, to approve the Cooperative Economic Development Agreement with Team Volusia Development Corporation. The motion carried by the following vote:

For: 5 - Commissioner Bradford, Commissioner Herzberg, Commissioner Honaker, Vice Mayor Nabicht, and Mayor Masiarczyk

B. Request Approval for a Cost-share Agreement between the St. Johns River Water Management District (SJRWMD) and the City of Deltona relating to the Lake Monroe Phase 4A project - Matt Doan, P.E., Acting Public Works Director (386) 878-8973

Strategic Goal: Infrastructure

Deputy City Clerk Janet Day read the following statement from Commissioner Soukup for the record: "He stated that he is opposed to the Team Volusia contract on the basis of how much the City has spent and has received nothing in return. He wishes his colleagues, staff and the residents a very Happy Thanksgiving!"

Mayor Masiarczyk left the meeting at 7:24 p.m. and returned at 7:24 p.m.

Approved by Consent Agenda - to authorize the Mayor or designee to execute the Cost-share Agreement between the SJRWMD and the City of Deltona as it pertains to Lake Monroe Phase 4A Project.

9. ORDINANCES AND PUBLIC HEARINGS:

A. Request for approval of Resolution No. 2016-56, Approval of Prior Year (FY 2015/2016) Budget Carry Forward of Transportation Fund funds in order to provide funding to complete multi-year Transportation projects - Robert Clinger, Finance Department (386) 878-8552.

Strategic Goal: Fiscal Issues - Transportation / CIP

Motion by Vice Mayor Nabicht, seconded by Commissioner Herzberg, to approve Resolution No. 2016-56, approval of Prior Year (FY 2015/2016) Budget Carry Forward of Transportation Fund funds in order to provide funding to complete multi-year Transportation projects.

Mayor Masiarczyk read the title of Resolution No. 2016-56 for the record.

A RESOLUTION OF THE CITY COMMISSION OF THE CITY OF DELTONA, FLORIDA;

AMENDING THE ANNUAL TRANSPORTATION FUND BUDGET FOR THE FISCAL YEAR BEGINNING OCTOBER 1, 2016, AND ENDING SEPTEMBER 30, 2017 BY CARRYING FORWARD FUNDS NOT SPENT IN FY 2015/2016 ON CERTAIN ON-GOING PROJECTS; REPEALING ALL RESOLUTIONS OR PARTS OF RESOLUTIONS IN CONFLICT HEREWITH; AND PROVIDING FOR AN EFFECTIVE DATE.

The motion carried by the following vote:

For: 5 - Commissioner Bradford, Commissioner Herzberg, Commissioner Honaker, Vice Mayor Nabicht, and Mayor Masiarczyk

Resolution No. 2016-56 was adopted at 7:35 p.m.

B. Request for approval of Resolution No. 2016-57, Approval of Prior Year (FY 2015/2016) Budget Carry Forward of Stormwater Fund funds in order to provide funding to complete multi-year Stormwater projects - Robert Clinger, Finance Department (386) 878-8552.

Strategic goal: Infrastructure

Motion by Commissioner Herzberg, seconded by Commissioner Honaker, to approve Resolution No. 2016-57, Approval of Prior Year (FY 2015/2016) Budget Carry Forward of Stormwater Fund funds in order to provide funding to complete multi-year Stormwater projects.

Mayor Masiarczyk opened and closed the public hearing as there were no public comments.

Mayor Masiarczyk read the title of Resolution No. 2016-57 for the record.

A RESOLUTION OF THE CITY COMMISSION OF THE CITY OF DELTONA, FLORIDA; AMENDING THE ANNUAL STORMWATER FUND BUDGET FOR THE FISCAL YEAR BEGINNING OCTOBER 1, 2016, AND ENDING SEPTEMBER 30, 2017 BY CARRYING FORWARD FUNDS NOT SPENT IN FY 2015/2016 ON CERTAIN ON-GOING PROJECTS; REPEALING ALL RESOLUTIONS OR PARTS OF RESOLUTIONS IN CONFLICT HEREWITH; AND PROVIDING FOR AN EFFECTIVE DATE.

The motion carried by the following vote:

For: 5 - Commissioner Bradford, Commissioner Herzberg, Commissioner Honaker, Vice Mayor Nabicht, and Mayor Masiarczyk

Resolution No. 2016-57 was adopted at 7:38 p.m.

C. Request for approval of Resolution No. 2016-63, Approval of Prior Year (FY 2015/2016) Budget Carry Forward of General Fund funds in order to provide funding to complete certain City initiatives - Robert Clinger, Finance Department (386) 878-8552.

Strategic goal: Fiscal Issues

Mayor Masiarczyk opened and closed the public hearing as there were no public comments.

Motion by Commissioner Honaker, seconded by Commissioner Herzberg, to approve Resolution No. 2016-63, Approval of Prior Year (FY 2015/2016) Budget Carry Forward of General Fund funds in order to provide funding to complete certain on-going City initiatives.

Mayor Masiarczyk read the title of Resolution No. 2016-63 for the record.

A RESOLUTION OF THE CITY COMMISSION OF THE CITY OF DELTONA, FLORIDA; AMENDING THE ANNUAL GENERAL FUND BUDGET FOR THE FISCAL YEAR BEGINNING OCTOBER 1, 2016, AND ENDING SEPTEMBER 30, 2017 BY CARRYING FORWARD FUNDS NOT SPENT IN FY 2015/2016 ON CERTAIN ON-GOING CITY INITIATIVES; REPEALING ALL RESOLUTIONS OR PARTS OF RESOLUTIONS IN CONFLICT HEREWITH; AND PROVIDING FOR AN EFFECTIVE DATE.

The motion carried by the following vote:

For: 5 - Commissioner Bradford, Commissioner Herzberg, Commissioner Honaker, Vice Mayor Nabicht, and Mayor Masiarczyk

Resolution No. 2016-63 was adopted at 7:39 p.m.

D. Request for Approval of Resolution 2016-64, Final Budget Amendment /Transfer for FY 2015/2016 to transfer funds between General Fund departments as part of the year end process - Robert Clinger, Finance Department (386) 878-8552.

Strategic Goal: Fiscal Issues

Mayor Masiarczyk opened and closed the public hearing as there were no public comments.

Motion by Commissioner Herzberg, seconded by Commissioner Honaker, to approve Resolution 2016-64, Final Budget Amendment /Transfer for FY 2015/2016 to transfer funds between General Fund departments as part of the year end process.

Mayor Masiarczyk read the title of Resolution No. 2016-64 for the record.

A RESOLUTION OF THE CITY COMMISSION OF THE CITY OF DELTONA, FLORIDA; AMENDING THE ANNUAL GENERAL FUND BUDGET FOR THE FISCAL YEAR BEGINNING OCTOBER 1, 2015, AND ENDING SEPTEMBER 30, 2016 BY ADJUSTING EXPENSES BETWEEN DEPARTMENTS; REPEALING ALL RESOLUTIONS OR PARTS OF RESOLUTIONS IN CONFLICT HEREWITH; AND PROVIDING FOR AN EFFECTIVE DATE.

The motion carried by the following vote:

For: 5 - Commissioner Bradford, Commissioner Herzberg, Commissioner Honaker, Vice Mayor Nabicht, and Mayor Masiarczyk

Resolution No. 2016-64 was adopted at 7:40 p.m.

E. Request for Approval of Resolution 2016-65, Budget Amendment for FY 2016/2017 in the Equipment Fund for $11,000 in order to provide funding for the mounting and installation of the Automated License Plate Readers (ALPRs) - Robert Clinger, Finance Department (386) 878-8552.

Strategic Goal: Public Safety

Motion by Commissioner Honaker, seconded by Vice Mayor Nabicht, to approve Resolution 2016-65, Budget Amendment for FY 2016/2017 in the Equipment Fund for $11,000 in order to provide funding for the mounting and installation of the License Plate Readers (LPRs).

Mayor Masiarczyk read the title of Resolution No. 2016-65 for the record.

A RESOLUTION OF THE CITY COMMISSION OF THE CITY OF DELTONA, FLORIDA; AMENDING THE ANNUAL EQUIPMENT FUND BUDGET FOR THE FISCAL YEAR BEGINNING OCTOBER 1, 2016, AND ENDING SEPTEMBER 30, 2017 BY ADJUSTING EXPENDITURES; REPEALING ALL RESOLUTIONS OR PARTS OF RESOLUTIONS IN CONFLICT HEREWITH; AND PROVIDING FOR AN EFFECTIVE DATE.

The motion carried by the following vote:

For: 5 - Commissioner Bradford, Commissioner Herzberg, Commissioner Honaker, Vice Mayor Nabicht, and Mayor Masiarczyk

Resolution No. 2016-65 was adopted at 7:42 p.m.

F. Request for approval of Resolution No. 2016-55, Approval of Prior Year (FY 2015/2016) Budget Carry Forward of Deltona Water funds in order to provide

funding to complete multi-year Utility projects - Robert Clinger, Finance Department (386) 878-8552.

Strategic Goal: Infrastructure

Mayor Masiarczyk opened and closed the public hearing as there were no public comments.

Motion by Commissioner Herzberg, seconded by Commissioner Bradford, to approve Resolution No. 2016-55, Approval of Prior Year (FY 2015/2016) Budget Carry Forward of Deltona Water funds in order to provide funding to complete multi-year Utility projects.

Mayor Masiarczyk read the title of Resolution No. 2016-55 for the record.

A RESOLUTION OF THE CITY COMMISSION OF THE CITY OF DELTONA, FLORIDA; AMENDING THE ANNUAL DELTONA WATER ENTERPRISE FUND BUDGET FOR THE FISCAL YEAR BEGINNING OCTOBER 1, 2016, AND ENDING SEPTEMBER 30, 2017 BY CARRYING FORWARD FUNDS NOT SPENT IN FY 2015/2016 ON CERTAIN ON-GOING PROJECTS; REPEALING ALL RESOLUTIONS OR PARTS OF RESOLUTIONS IN CONFLICT HEREWITH; AND PROVIDING FOR AN EFFECTIVE DATE.

The motion carried by the following vote:

For: 5 - Commissioner Bradford, Commissioner Herzberg, Commissioner Honaker, Vice Mayor Nabicht, and Mayor Masiarczyk

Resolution No. 2016-55 was adopted at 7:45 p.m.

G. Request for approval of Resolution No. 2016-62, Approval of Prior Year (FY 2015/2016) Budget Carry Forward of Equipment Fund funds in order to provide funding for items budgeted but not purchased and / or received in FY 2015/2016 - Robert Clinger, Finance Department (386) 878-8552.

Strategic Goal: Fiscal Issues

Mayor Masiarczyk opened and closed the public hearing as there were no public comments.

Motion by Vice Mayor Nabicht, seconded by Commissioner Herzberg, to approve Resolution No. 2016-62, Approval of Prior Year (FY 2015/2016) Budget Carry Forward of Equipment Fund funds in order to provide funding for items budgeted but not purchased and / or received in FY 2015/2016.

Mayor Masiarczyk opened and closed the public hearing as there were no public

comments.

Mayor Masiarczyk read the title of Resolution No. 2016-62 for the record.

A RESOLUTION OF THE CITY COMMISSION OF THE CITY OF DELTONA, FLORIDA; AMENDING THE ANNUAL EQUIPMENT FUND BUDGET FOR THE FISCAL YEAR BEGINNING OCTOBER 1, 2016, AND ENDING SEPTEMBER 30, 2017 BY CARRYING FORWARD FUNDS NOT SPENT IN FY 2015/2016 ON CERTAIN EQUIPMENT; REPEALING ALL RESOLUTIONS OR PARTS OF RESOLUTIONS IN CONFLICT HEREWITH; AND PROVIDING FOR AN EFFECTIVE DATE.

The motion carried by the following vote:

For: 5 - Commissioner Bradford, Commissioner Herzberg, Commissioner Honaker, Vice Mayor Nabicht, and Mayor Masiarczyk

Resolution No. 2016-62 was adopted at 7:46 p.m.

10. OLD BUSINESS:

None.

11. NEW BUSINESS:

A. The Center at Deltona Construction of a Community Center Award (Bid No. 17002) - Chris Bowley, AICP, Planning and Development Services, (386) 878-8602.

Strategic Goal: Economic Development - Construct a Senior Community Center.

Mayor Masiarczyk left the meeting at 7:47 p.m. and returned at 7:52 p.m.

Mayor Masiarczyk opened the public hearing.

Mike Williams, 2889 Cottageville Road, Deltona, asked when does the shovel go into the ground and he stated he is counting on the building being ready in 2018 for the Martin Luther King Celebration where the First Lady Michelle Obama has been invited to attend, he liked the idea of an apprentice program and he encouraged the City to do that.

Mayor Masiarczyk closed the public hearing.

Motion by Vice Mayor Nabicht, seconded by Commissioner Honaker, to award Bid No. 17002, the Center at Deltona Construction of a Community Center, to Mulligan Constructors, Inc. for a total of $7,212,393.00 that

includes $7,163,000.00 as the base bid and alternate one at $49,393.00.
The motion carried by the following vote:

For: 5 - Commissioner Bradford, Commissioner Herzberg, Commissioner Honaker, Vice Mayor Nabicht, and Mayor Masiarczyk

B. Grant Compliance Monitoring for Davis Bacon and FDOT - Chris Bowley, AICP, Planning and Development Services, (386) 878-8602.

Strategic Goal: Fiscal Issues - Other grants as approved by the City Commission.

Motion by Vice Mayor Nabicht, seconded by Commissioner Herzberg, to select Guardian Community Resource Management, Inc. for grant compliance monitoring for Davis Bacon and FDOT grants.

Mayor Masiarczyk opened and closed the public hearing as there were no public comments.

The motion carried by the following vote:

For: 5 - Commissioner Bradford, Commissioner Herzberg, Commissioner Honaker, Vice Mayor Nabicht, and Mayor Masiarczyk

Mayor Masiarczyk opened the public hearing.

Mike Williams, 2889 Cottageville Road, Deltona, spoke about graduating students within the City that have received degrees that could be hired by the City to do the work for less than the $90 an hour rate, perhaps there is another way to look at it and look at someone else, his secret for success is to look at how someone is doing something right and copy their model, and he spoke about the liability concerns.

Mayor Masiarczyk closed the public hearing.

The motion carried by the following vote:

For: 5 - Commissioner Bradford, Commissioner Herzberg, Commissioner Honaker, Vice Mayor Nabicht, and Mayor Masiarczyk

12. CITY ATTORNEY COMMENTS:

None.

13. CITY MANAGER COMMENTS:

None.

14. CITY COMMISSION COMMENTS:

Commissioner Bradford thanked everyone for a wonderful first meeting, that she hoped to continue having positive meetings so that the Commission can project that Deltona is the largest and best City that is going to be growing at a pace where the Grants Manager is going to be extremely busy, the City will be looking for a lot more development but, to do that the City needs to keep it business positive and as uplifting as possible and that she appreciates everyone that attends the Commission meetings.

Commissioner Herzberg wished everyone a happy and safe Thanksgiving and in light of all the things happening in the world, there was another big earthquake today and there seems be tragedies across the board for a lot of other countries, people and even within our own country. She stated to hold your neighbors, family and friends close. That discord happens between people but, remember that we only go around once. Things can be ironed out but, if your personal relationships are broken and gone, they cannot come back. She stated she cares deeply about her City, her fellow Commissioners, management, the residents and the children of the City who are the future. She stated she thinks everyone tries to move the City forward to the best of their ability, there are a lot of good things coming up, and her goal for January is to involve the residents more, to get their input and explain to them what the City does because local government is the closest thing for the people and by the people. Happy Thanksgiving, God Bless you all.

Commissioner Honaker stated the City's landscaping code was adopted from Volusia County when the City was incorporated, one (1) of the issues Mr. Larry Kent discussed was wanting to move a dumpster 15 feet over. Mr. Kent was repaving his parking lot and instead of paving the corner where the dumpster would go he put in concrete but, it does not absorb the fluids from a dumpster so he put pavement in. The City's landscaping code states if a dumpster is moved or anything is done to a dumpster it has to be enclosed. The landscaping code states there has to be a 25 foot setback which does not take into consideration the current businesses. Staff is working on rewriting the landscaping code to look at the setback and make it smaller because it does not apply to the City's current businesses but, it would apply to new businesses. He asked if a rewrite would require new development to enclose a dumpster. He stated it is like the sign ordinance when businesses wanted digital signs and a motion was made for a moratorium so businesses could keep their digital signs until the code was rewritten. He stated he would like to make a motion to have a moratorium on having to enclose dumpsters because it is moved over 15 feet. Bulldog Pub wanted to move their dumpster in order to place a picnic table outside the back door and they were required to enclose the dumpster. He requested that the Commission concur to do a moratorium on having to enclose dumpsters and put in variances if the setbacks do not meet until staff finishes rewriting the landscape code and it comes before the Commission for approval.

Mayor Masiarczyk asked if there was a rewrite underway and Mr. Bowley replied there is a rewrite underway and it is tied to substandard lot sizes, a very wide 25 foot buffer

along thoroughfares and it will come before the Commission early next year.

Mayor Masiarczyk asked if the Commission had any issues with the request and there were none.

Commissioner Bradford stated Mr. Kent was told he needed to pull a permit and then was told he did not have to pull a permit. She asked what the process was and how does the City keep this situation from happening again. Mr. Bowley replied for screen enclosures, dumpsters and new projects the site plan goes through the Planning & Development Services Department but, once it passes his department they do not see it again or if it comes through the Building Department. He stated this probably came through the Building Department but, he took a look at the pad because there is no asphalt or driveway there now. It is off to the side which was for easy pick-up and drop off of the solid waste collector.

Vice Mayor Nabicht stated ultimately, no permit was required to be pulled to pour the pad? Mr. Baker replied a permit was required to pour the pad and instead of getting a new permit Mr. Kent modified an existing permit to include the pad.

Vice Mayor Nabicht stated as long as the City is going to continue to require a retrofit when there is a change or modification made to the location then they need to comply with the current screening requirements. He stated he would be interested in looking at the materials that the City chooses, the maintenance on those materials and that the City needs a better list of materials to be used.

Commissioner Herzberg stated as the City grows, things change, and the landscape needs to be more urban and the City needs to make modifications for the older things that are already in place. As time goes on the City needs to start addressing these issues where people want to beautify or upgrade but, are hemmed in by antiquated regulations and to be flexible as the City grows.

After discussion, the Commission concurred to place a temporary moratorium on having to enclose dumpsters and put in variances if the setbacks do not meet until staff finishes rewriting the landscape code and it comes before the Commission for approval.

Vice Mayor Nabicht stated the West Volusia Summit meeting on Saturday that everyone attended except City Attorney Vose was a productive intergovernmental meeting where significant topics where discussed. One of the topics was the issue of homelessness, it is important that it is addressed as “West Volusia” because the situation in West Volusia is different with regards to the East Volusia homelessness. Theirs is tied to the tourist driven economy that they have and the homelessness impact on that. Ours is a little different, there were some numbers, our numbers are not high in Deltona but, the City does have homelessness and to that end doing our part to provide some relief, some shelter, the programs that the Neighborhood Center provide, and the Community Development Block Grant (CDBG) Funding that the City provides to them but, DeLand has come up with a good model in partnering with faith based organizations, the private

sector and government. One of the suggestions made at the meeting was to engage the faith based community by meeting with them. The Mayor and City Manager of DeLand have been going around meeting with them to get their buy in and commitment from them in terms of whatever they can provide. He stated he would like the Commission to consider hosting a breakfast at City Hall, invite all the religious leaders from the community and have the Mayor and City Manager of DeLand as the guest speakers rather than trying to meet individually. It can be done after the first of the year, on a Saturday morning which would provide the face to face contact that is needed and hear firsthand what the different organizations are doing in the community currently.

Mayor Masiarczyk stated the Commission has talked about having some face time after the first of the year and he suggested having the group here for breakfast and a discussion and afterwards the Commission can discuss its support on the homelessness issue and discuss other issues that need to be addressed.

Vice Mayor Nabicht suggested looking into the Culinary Arts Program at University High School to cater the breakfast. He stated he took a two (2) day class there and those students provided the lunch, it was professionally done and they can cater for the breakfast.

Commissioner Honaker asked to find out when the letter of support is needed and Mayor Masiarczyk replied after the first of the year, 2018.

After discussion, the Commission concurred to have a meeting after the first of the year with the faith based community, to provide breakfast by the Culinary Arts Program and to have the City Manager contact the DeLand City Manager Michael Plum.

Commissioner Bradford suggested to extend the breakfast to other local community involvement groups because the City can be a lot stronger group if everyone joins forces. Mayor Masiarczyk agreed and he asked the City Manager to contact the local businesses that provide social services.

Vice Mayor Nabicht stated that the use of medical marijuana had passed, the last time the topic was on the ballot the City brought forth an ordinance to control distribution and grow locations. He asked for a consensus to give the City Attorney direction to research the new law, see what impact it is going to have and provide the Commission a report to be placed under New Business of the agenda. From the report the Commission can see where the City stands, how it affects the land development code, and he realizes that the legislature will need to put some rules in place but, the Commission may want to provide direction to the Lobbyist to take to the legislative delegation.

Mayor Masiarczyk stated Mayor Buckhorn in Tampa sends out information, he is of like mind, and the City needs to follow this carefully as to how they are set-up geographically. He suggested both the City Manager and City Attorney to monitor the issue and as soon as there is some firm consensus on how the rules are going to work to make sure the City is ready to put something into action to protect the City.

Vice Mayor Nabicht stated to also include how Human Resources and policies and procedures will handle this when it is legalized. He stated there is a lot of work to be done and he just wanted to start the conversation, give the City Manager and City Attorney an opportunity to start researching the issue and keep the Commission apprised of what transpires.

After discussion, the Commission concurred to direct the City Attorney and City Manager to research the new legal marijuana law, see what impact it is going to have on the City and provide the Commission a report to be placed under New Business of the agenda.

Mayor Masiarczyk stated the Round Table of Elected Officials is sponsored by the County, it is once a month at the airport in Daytona and it has been dominated recently by the topic of homelessness, transportation does not have a foothold and most of the other issues are gone. The group is trying to work together cooperatively on things, the group has lost some good members, and after the first of the year it will start up again. He stated if anyone has any items that can be worked on countywide to let him know and that the marijuana law may be one topic because it is going to affect every City in Volusia County so he will mention it at the next meeting. He wished everyone a Happy Thanksgiving. He stated he wanted to end on a high note and try to be as positive as he can, he has been doing this for a lot of years and he does not want to get into any depth on his statement but, he did want to say to everyone in the audience and at home that these are very trying times for all of the members of the Commission. The Commission is trying to do the best it can to move the City forward. He stated he publically heard someone mention about support tonight and he stated “I publically support my City Manager and my City Attorney and our staff for what they are doing for the City.” Unfortunately, others have a difference of opinion which is all our right but, he thinks we have to work together and put things aside. He stated the things that some of you see, I see way more than I want to see, there are things that happen in our City in social media, the President of the United States talked about it a few weeks ago and it is happening right here. He stated everyone has a right to their opinion, opinions are not facts, please get the facts and move forward. He stated he personally wants to say publically that until he sees a factual misrepresentation, illegality or something he will continue to support the City Manager and City Attorney that the Commission has hired. Both have done excellent work, have been behind the Commission, have protected the Commission, and have defended the Commission. The Commission is in the process of trying to self-regulate itself, to make the Commission work better and be more congenial. He stated he hoped that all seven (7) Commissioners could work toward that in the future. He wished everyone a Happy Thanksgiving and he stated it is the holiday season and please, please, if possible help the City with its food drive, the City could really use the help this year. The City will be collecting donations until November 30th and then staff will be distributing it to the food pantries and other organizations. God Bless and Happy Thanksgiving.

15. ADJOURNMENT:

There being no further business, the meeting adjourned at 8:40 p.m.

_____
John C. Masiarczyk, Sr., MAYOR

ATTEST:

_____
Joyce Raftery, CMC, MMC, CITY CLERK

City of Deltona

2345 Providence Blvd.
Deltona, FL 32725

Agenda Memo

AGENDA ITEM: A.

TO: Mayor and Commission

AGENDA DATE: 12/12/2016

FROM: Jane Shang, City Manager

AGENDA ITEM: 5 - A

SUBJECT:
Proclamation - Alberto Gómez-Gómez Day

LOCATION:
N/A

BACKGROUND:
Recognition for Alberto Gómez-Gómez and to thank him on his 60th birthday for his 20 years of artistic service and dedication to the City of Deltona and surrounding community.

COST:
N/A

SOURCE OF FUNDS:
N/A

ORIGINATING DEPARTMENT:
City Manager's Office

STAFF RECOMMENDATION PRESENTED BY:
N/A - Presentation Only

POTENTIAL MOTION:
N/A - Presentation Only

powered by Legistar™

***WHEREAS**, Alberto Gómez-Gómez became a permanent resident and artist in the City of Deltona in January, 1997 at the age of 40. Alberto remains an active member of the Florida community and he exemplifies the noble quality of those who always leave a place better than when they found it, inspiring all of us to do the same; and*

***WHEREAS,** years of his service have been marked by exemplary dedication to the best interests of the community. Alberto has worked constantly to be an Ambassador of the Arts representing the City of Deltona around the world, contributing to the enrichment of lives and strengthening the value of arts in everyday life; and*

***WHEREAS**, art and culture lectures, and presentations of lectures-performances under Alberto's direction cannot be quantified in the economic benefit to the Country or in the collaboration experienced by so many; but, can only be measured by the tremendous gratitude we have for Alberto's diverse art and culture legacy, his selfless service, and the imprint he leaves upon our community; and*

***WHEREAS**, December 2016 marks 20 years of artistic service to the City of Deltona, and the surrounding community, during which time Mr. Gómez-Gómez has earned the respect, admiration, love, and affection of fellow citizens and he has been a positive influence in Florida, New Mexico, Michigan, and Washington D. C.; and*

***WHEREAS**, the citizens of the City of Deltona, Florida wish to honor Alberto Gómez-Gómez for his passion, service, and commitment to the community, his example as a role model to children, families, and institutions, and his contribution to the United States by painting 31 murals out of the 50 he has planned to paint.*

***NOW, THERFORE**, We, the Mayor and City Commission of Deltona, Florida, do hereby proclaim December 12, 2016, as*

"Alberto Gómez-Gómez Day"

in the city of Deltona, Florida, and urge all citizens to honor and thank Alberto on his 60th Birthday for his friendship, his dedicated service to our community while giving generously and caring deeply for our youth, and for representing the Arts and Culture for the City of Deltona. We extend best wishes for his continued success in his future endeavors.

***EXECUTED** this 12th day of December, 2016.*

_____

John Masiarczyk, Sr., Mayor

City of Deltona

2345 Providence Blvd.
Deltona, FL 32725

Agenda Memo

AGENDA ITEM: B.

TO: Mayor and Commission **AGENDA DATE:** 12/12/2016

FROM: Jane K. Shang, City Manager **AGENDA ITEM:** 5 - B

SUBJECT:
Recognition to Nina Ehmer, winner of the “My City: I’m Part of It, I’m Proud of It” photo contest

LOCATION:
Photo of Lakeshore Drive, Deltona

BACKGROUND:
Nina Ehmer’s photo of the Lake Monroe boat launch was taken around 5:30 p.m., Dec. 15, 2015, using an Olympus E3 Digital SLR with a 12-60 mm lens. Ehmer always had a “mild interest” in photography but became serious about in 2014 when she received her first digital camera. Ehmer says she liked the idea of not having to deal with film and the instant gratification of being able to view images right away. She began to look at other photographers’ work online and began to read more about photography. She and her husband Howard live in the house they originally built here in Deltona on Lake Theresa in 1986. They live in a wooded environment that encourages a variety of wildlife. Her favorite subjects are birds, butterflies, and the resident family of sandhill cranes. The Ehmers have several butterfly and hummingbird gardens she also photographs. In late 2004, she began selling her photos at the New Smyrna Beach Farmers Market (usually happens October through April). To see more of her photos, visit ninaehmer.com.

COST:
N/A

SOURCE OF FUNDS:
N/A - Recognition Only

ORIGINATING DEPARTMENT:
City Manager’s Office

STAFF RECOMMENDATION PRESENTED BY:
N/A - Recognition Only

POTENTIAL MOTION:
N/A - Recognition Only

powered by Legistar™

City of Deltona

Certificate of Recognition

Presented to

Nina Ehmer

In recognition for being selected the winner
of Deltona's "My City: I'm Part of It, I'm Proud of It"
photo contest with her photo *Lakeshore Drive.*

December 12, 2016

John Masiarczyk, Sr., Mayor

City of Deltona

2345 Providence Blvd.
Deltona, FL 32725

Agenda Memo

AGENDA ITEM: C.

TO: Mayor and Commission **AGENDA DATE:** 12/12/2016

FROM: Jane K. Shang, City Manager **AGENDA ITEM:** 5 - C

SUBJECT:
Super Star Student of the Month Certificates for November 2016

LOCATION:
N/A

BACKGROUND:
Super Star Student of the Month awards for November 2016 will be presented to:

1. Deltona Lakes Elementary, Jadiel Cruz, 1st Grade
2. Discovery Elementary, William Marte, 5th Grade
3. Enterprise Elementary, Delaney Mullins, 2nd Grade
4. Forest Lake Elementary, Elisa-Rae Fantauzzi, 1st Grade
5. Friendship Elementary, Morgan Saavedra, 5th Grade
6. Pride Elementary, Shane LeeKam, Kindergarten
7. Spirit Elementary, Briana Gutierrez, 3rd Grade
8. Sunrise Elementary, Rece Watters, 2nd Grade
9. Timbercrest Elementary, Miguel Sanchez, 1st Grade
10. Deltona Middle, Danali Rivera, 8th Grade
11. Galaxy Middle, Kayla Crespo, 8th Grade
12. Heritage Middle, Leandra Morales, 8th Grade
13. Deltona High, Dayne Ford, 10th Grade
14. Pine Ridge High, Naiomi Latorre, 12th Grade
15. University High, Savannah Yilk, 12th Grade

COST:
N/A

SOURCE OF FUNDS:
N/A

ORIGINATING DEPARTMENT:
City Manager's Office

STAFF RECOMMENDATION PRESENTED BY:
N/A - Presentation Only.

powered by Legistar™

AGENDA ITEM: C.

POTENTIAL MOTION:
N/A - Presentation Only.

Super Star Students Read File – November 2016 presented on December 12, 2016.

Teacher	School	Student	Grade	Reading Comments on Student Achievements
Miss Gabriela Hedman	Deltona Lakes Elementary	Jadiel Cruz	1st	Jadiel Cruz, a 1st grade student at Deltona Lakes Elementary School, is receiving a Super Star certificate for: • Jadiel maintains an above average grade in all his academics. He is a positive participator in all the classroom discussions and provides great insight with the connections he makes. I love his use of complete sentences when he supports his work or tells a story. • Jadiel is very responsible and demonstrates this by always turning in his homework on time as well as finishing his work in a timely manner. He is also very truthful. Jadiel is honest and has appropriate behavior. • Jadiel is also a great friend. He demonstrates kindness towards others and is a leader and role model to his classmates. He is a wonderful helper and encourages others to always do their best. Jadiel is a perfect example of demonstrating life skills in a positive way. He has also earned Star Student of the Week and a positive referral from another teacher.
Mrs. Guidry and Ms. Hermes	Discovery Elementary	William Marte	5th	William Marte, a 5th grade student at Discovery Elementary School, is receiving a Super Star certificate for: • Academic honor roll. • William enjoys helping both his peers and teachers. • William is a leader and a good citizen.

Mrs. Myers	Enterprise Elementary	Delaney Mullins	2nd	Delaney Mullins, a 2nd grade student at Enterprise Elementary School, is receiving a Super Star certificate for: • Being respectful and kind to peers and adults. • She perseveres through difficult tasks. • She has a strong commitment to learning. • She continuously makes great choices and is trustworthy, cooperative and helpful. • Delaney is always smiling and happy.
Mrs. Haines	Forest Lake Elementary	Elisa-Rae Fantauzzi (Pronounced Fan-*too*-zee)	5th	Elisa Rae Fantauzzi, a 5th grade student at Forest Lake Elementary School, is receiving a Super Star certificate for: • She is a shining example of leadership. She arrives to school with a huge smile on her face and is ready to work every day! • She has attended here since K and has maintained honor roll each year. • Elisa Rae has maintained a straight A average in all subjects the first nine weeks. • She is a member of Safety Patrol and has already been a captain. She is a member of the Art Club and she often tutors her peers in math.
Mrs. Watson	Friendship Elementary	Morgan Saavedra	5th	Morgan Saavedra, a 5th grade student from Friendship Elementary, is receiving a Super Star certificate for: • Being devoted to achieving high academic levels. • Morgan helps peers and adults on a regular basis. She is kind, patient and friendly to all. • Her dependability and integrity; she is a Safety Patrol who always helpful and responsible.

Mrs. Dalusio	Pride Elementary	Shane LeeKam	Kinder-garten	Shane LeeKam, a kindergarten student at Pride Elementary School, is receiving a Super Star certificate for: • Academic excellence and excellent study skills. • He is responsible and an outstanding school citizen. • Shane is very helpful to his teacher, peers, and family. • He has outstanding listening and direction following skills.
Mrs. Holloway	Spirit Elementary	Briana Gutierrez	3rd	Briana Gutierrez, a 3rd grade student at Pride Elementary School, is receiving a Super Star certificate for: • Briana is always challenging herself to do better. • She is always prepared for each lesson and goes above and beyond by helping others. • Briana is a sweet, smart girl who never gives up. • During her free time you can always catch her reading a good book and taking a reading counts test. • She is also a part of Fit Squad and loves to be around friends.

Mrs. Hildebrand	Sunrise Elementary	Rece Watters (Pronounced Reece Waters)	2nd	Rece Watters, a 2nd grade from Sunrise Elementary School, is receiving a Super Star certificate for: • Amazing leadership skills. He strives to always model the 7 Habits of Happy Kids! • Rece is responsible, cooperative, and an outstanding Sunrise citizen. He always shows up to school on time and completes his math and reading homework every night. • Rece was nominated as an outstanding student for demonstrating being proactive. He enjoys learning websites like, Raz-Kids, IXL, and Waterford. • Rece is very helpful to his teacher, peers, and family.
Mrs. Sobol	Timbercrest Elementary	Miguel Sanchez	1st	Miguel Sanchez, a 1st grade student from Timbercrest Elementary School, is receiving a Super Star certificate for: • Trying his best in everything he does. • He is the ideal citizen in the class- always supportive of his classmate, eager to help, always has kind words, good manners and loving personality. • Adults and children could learn from Miguel's caring and polite personality, his strives to always do his best, and he is an inspiration to all who have the honor of working with him, adults and students!

Deltona Middle	Deltona Middle	Danali Rivera	8th	Danali Rivera, an 8th grade student from Deltona Middle School is receiving a Super Star certificate for: • Academic determination and focus. • Carrying herself in a respectful manner. • Assisting others without negative attitudes. • Having the courage to stand up for what she believes in and doesn't follow the crowd. • Being involved in the school overcoming her fear and shyness.
Ms. Bruno	Galaxy Middle	Kayla Crespo	8th	Kayla Crespo, an 8th grade student from Galxy Middle School is receiving a Super Star certificate for: • Academic excellence and excellent study skills. • She has shown outstanding improvement in all of her grades. • Kayla is very helpful to her teacher and peers, always assisting a struggling student. • She demonstrates exceptional responsibility.
Ms. Luckett	Heritage Middle	Leandra Morales	8th	Leandra Morales, an 8th grade student from Heritage Middle School is receiving a Super Star certificate for: • Leandra is a talented singer and incredible leader. • She has been in the Heritage Middle School Show Choir for two years and is always willing and eager to lead different parts of rehearsal and to help and encourage her classmates to do their best. • Leandra's academics are outstanding.

Abaco Rayner	Deltona High	Dayne Ford	10th	Dayne Ford, a 10th grade student from Deltona High School is receiving a Super Star certificate for: • Academic excellence: Dayne maintains a 4.28 Grade Point Average, with a rigorous schedule in both Honors and Dual Enrollment courses. She is currently ranked 2nd in her class. She is challenging herself academically in high school in order to graduate with her high school diploma and Associates of Arts Degree. • Extracurricular activities: Dayne is an accomplished mid fielder for our girls varsity soccer team. She also participates in our Agriculture program. • Service activities: Dayne has completed over 200 hours of community services, volunteering at a local middle school for Science Olympiad.
K. Wilson	Pine Ridge High	Naiomi Latorre	12th	Naiomi Latorre, a 12th grade student from Pine Ridge High School, is receiving a Super Star certificate for: • Naiomi has taken on the role of president of Students Against Destructive Decisions. She's leading her team of officers in a highly organized and effective manner. Her ability to organize officer meetings and facilitate the design of effective general meetings is highly impressive. • Naiomi is a senior and is involved in multiple clubs – including SADD, Earth First, Ben Carson Book Club, and National Honor Society -- and she's dual enrolled. • Naiomi is truly a Superstar!

Ms. Parrish	University High	Savannah Yilk	12th	Savannah Yilk, a 12th grade student from University High School, is receiving a Super Star certificate for: • Academic excellence and her love for learning. • She is a kind and helpful young lady and is very goal oriented. • She is captain of the UHS swim team. • She is leader among her team mates and peers.

City of Deltona

2345 Providence Blvd.
Deltona, FL 32725

Agenda Memo

AGENDA ITEM: A.

TO: Mayor and Commission **AGENDA DATE:** 12/12/2016

FROM: Jane K. Shang, City Manager **AGENDA ITEM:** 8 - A

SUBJECT:
Approval of agreement with the County of Volusia for Municipal Transport Program - Bill Snyder, Fire Chief (386) 575-6902

Strategic Goal: Public Safety - pursue the ability of the City to be able to provide medical transport.

LOCATION:
N/A

BACKGROUND:
The fire department has been working with the county to expand the current medical transport agreement. Our current agreement allows us to transport on a contingency basis. This means that if we arrive at the scene of a critical patient, determine there is an immediate need to transport and the County transport unit is more than 10 minutes away we can transport. The expansion would allow the city to participate in the county's PLUS (Peak Load Utilization System) program. This would allow the city to continue to transport on a contingency basis, but also allow us to transport on a primary basis when the county's system is overloaded and we are requested by the county. A PLUS transport would occur when the county's transport unit is going to have a long delay or they have no units available. They would then dispatch our rescue unit to transport on both emergency and non-emergency calls. This expansion would allow the fire department to be there for our citizens when the county system is overloaded. Currently, the county will not entertain any agreement that allows the city to transport as the primary unit except under the PLUS program. The county is working with the cities that currently provide medical transport to all come under the PLUS program agreement.

COST:
N/A

SOURCE OF FUNDS:
N/A

ORIGINATING DEPARTMENT:
Fire Department

STAFF RECOMMENDATION PRESENTED BY:
Bill Snyder, Fire Chief - Recommends approval of agreement with the County of Volusia for Municipal Transport Program.

AGENDA ITEM: A.

POTENTIAL MOTION:
“I move to authorize approval of agreement with the County of Volusia for Municipal Transport Program.

MUNICIPAL TRANSPORT PROGRAM

Division of Emergency Medical Administration
125 West New York Avenue, Suite 182
DeLand, Florida 32720-5415
Northeast Volusia (386) 248-8149 Southeast Volusia: (386) 423-3307
West Volusia: (386) 740-5201 Facsimile: (386) 626-6618

Instructions

SUBMISSION OF THE APPLICATION

Applicants are required to submit:

1) A printed hard copy of the completed application, including original signature page and
2) Executed Business Associate Agreement.

Once the application is completed, print a hard copy. The application shall be executed by the Chief Administrative Officer of the applicant. The hard copy and the original signature page shall be submitted to:

County of Volusia
Division of Emergency Medical Administration
125 West New York Avenue, Suite 182
DeLand, Florida 32720-5415

The applicant should retain a copy for their records.

Municipal Transport Program Application

NAME OF ORGANIZATION		DATE
Deltona Fire Department		11/1/2016
ADDRESS 1685 Providence Blvd.		
CITY Deltona	STATE Florida	ZIP 32725
FIRE CHIEF NAME Bill Snyder	TELEPHONE NUMBER (386) 575-6902	EMAIL bsnyder@deltonafl.gov
EMS MANAGER NAME Bush Swisher	TELEPHONE NUMBER (386) 575-6904	EMAIL bswisher@deltonafl.gov

As a condition of participation as a municipal transport provider, the applicant agrees to:

1. Operate under the *Certificate of Public Convenience and Necessity, Advanced Life Support Transport* issued to the County of Volusia.
2. Operate within the parameters outlined below, or amended in writing by the County of Volusia:
   a. Contingency emergency medical transport: The approved provider has identified the presence of an unstable emergency medical condition through appropriate assessment and prehospital care, consistent with *Volusia County Prehospital Standing Orders and Treatment Protocols*, has been initiated for an appropriate amount of time (ten minutes) and coordination between the municipal transport unit and the county transport unit has occurred via radio and municipal transport is deemed mutually appropriate due to patient's condition and an extended response by the responding CTU.
   b. Peak Load Utilization System (PLUS): The municipal provider has been requested to respond and be prepared to transport by the VCEMS system Status Coordinator in the communications center. The City and the County acknowledge the goal and intent of the program is for the City to supplement the available number of transport units within their municipal boundaries during periods when the emergency medical system is experiencing a peak in demand for service and not to take over the County's responsibility to provide ambulance service. The county may adjust posts in geographically difficult to reach areas to allow for city units to respond to calls.
   c. As the system evolves, the county and the city will work together to adjust for the needs of the citizens as necessary.

3. Approved municipal transport units shall be presumed available to provide transport unless the city has notified the communications center otherwise. The city shall advise the communications center of any changes in unit availability or location.
4. The city may not commence emergency or non-emergency transport outside its municipal boundary unless requested to do so by the VCEMS System Status Coordinator within the communications center. If accepted and approved by the county, this application shall become a binding interlocal agreement between the city and the county authorizing the city to conduct emergency or non-emergency transport outside its municipal boundaries pursuant to the terms and conditions contained herein.
5. Vehicles identified in this application shall be staffed and equipped consistent with all applicable statutes and regulations promulgated there under and in accordance with local requirements established by the EMS Medical Director.
6. The Applicant agrees to participate in and fully cooperate with all clinical and/or operational quality review and improvement activities as deemed necessary by the Volusia County Public Protection Department, the EMS Medical Director and/or Emergency Medical Administration Division. Emergency Medical Administration Division shall review each transport to determine whether it adheres to program guidelines. If the determination involves any clinical element, the Volusia County EMS Medical Director shall be responsible for determining the appropriateness of the transport. Inappropriate decision making regarding transport will be addressed to the Agency Chief.
7. If municipal transport is initiated, the provider will be responsible for patient care throughout transport, including transference of patient care to hospital staff.
8. The applicant shall notify the Emergency Medical Administration Division in writing of any problems associated with, or deviations from, the routine delivery of transport services no later than the following business day.
9. The applicant shall ensure that the Emergency Medical Administration Division has current employment data on all employees eligible to participate in the Municipal Transport Program. Data will include employer verification of employee's cleared criminal background check, review and clearance of the OIG Exclusion List, verification of a current vehicle operator's license. Such information shall be provided in a format acceptable to the division.
10. The applicant shall indemnify and hold harmless the County of Volusia for claims that may arise from the applicant's negligent provision or failure of provision of services under this program. Such indemnification shall include, damages; costs; attorney's fees; expense of defense and investigation; and any other cost expense of whatsoever nature caused by the negligence of the applicant. Regardless of the foregoing, both the city and the county expressly retain all rights, benefits, and immunities of sovereign immunity in accordance with § 768.28, Florida Statutes, including any limitations as to their respective liabilities contained therein, and the city's indemnification obligations hereunder shall not be interpreted or construed as requiring the city to insure or indemnify the county for the county's negligence or to assume any liability for the county's negligence in contravention of the requirements of § 768.28(19), Florida Statutes.
11. The city shall utilize the electronic patient care reporting software, licensed to the County of Volusia, for recording all transport incidents, including all appropriate attachments and identifying the paramedic-in-charge. The completed report shall be finalized in the ePCR

system within twenty-four (24) hours of the time the vehicle was originally dispatched. Billing submissions will be subject to review and approval by the County. The city will provide and maintain the requisite hardware and software.

12. The County shall provide billing services.
13. Reimbursement for transports, to the extent permissible under state and local law, performed within the established parameters of the program shall be based on the actual fee collected for the subject transport less an administrative fee of ten percent (10%). In the event a transport occurs outside of the established program parameters, the county reserves the right to withhold a portion or all of reimbursement. Fees for services are set by the Volusia County Council.
14. As a condition of participation under the Municipal Transport Program, the applicants shall execute a separate business agreement (see attached) with the County of Volusia to allow for sharing of protected health information in accordance with federal and state law.
15. In the event that either party determines that this agreement is not in their agency's best interest they have the right to terminate this agreement provided that a 90 day notice of termination is provided.

The AUTHORIZATION page within this application shall be signed by the chief administrative officer for the local government and be notarized.

By the below signature on this application, the applicant affirms all of the above requirements have been met and will be maintained for the duration of the municipality's participation in the Municipal Transport Program.

CHIEF ADMINISTRATIVE OFFICER (PRINT)	CHIEF ADMINISTRATIVE OFFICER (SIGNATURE)	DATE
Jane Shang (City Manager)		

STATE OF FLORIDA
COUNTY OF VOLUSIA

Before me, the above signed authority, _____, personally appeared as _____, who is personally known to me and, after being duly sworn, did there upon say that the information and statements contained in the foregoing instrument are true and correct to the best of his or her knowledge, information and belief.

NOTARY PUBLIC STATE OF FLORIDA AT LARGE	DATE	MY COMMISION EXPIRES (AFFIX SEAL)
_____	_____	_____

BUSINESS ASSOCIATE AGREEMENT

This BUSINESS ASSOCIATE AGREEMENT (the "Agreement"), is entered by and between the City of Deltona ("Business Associate"), with the address of 2345 Providence Blvd., Deltona, FL 32725 and the **County of Volusia** ("Covered Entity"), a Florida political subdivision with the address of 125 W. New York Avenue, Suite 182, DeLand, Florida 32720-5415 (collectively referred to as "Parties"), for the purpose of: Municipal Transport Program.

WITNESSETH

WHEREAS, Covered Entity is a health care provider and a "covered entity" as defined in the Health Insurance Portability and Accountability Act of 1996 and related regulations, as amended from time to time ("HIPAA"); and

WHEREAS, Business Associate is a "business associate" as defined in HIPAA; and

WHEREAS, Covered Entity wishes to commence or continue a business relationship with Business Associate that shall be/has been memorialized in a separate agreement (the "Underlying Agreement"), and the nature of the Underlying Agreement may involve the exchange of Protected Health Information ("PHI") as that term is defined in HIPAA; and

WHEREAS, the HIPAA Privacy Standards, as amended from time to time (the "Privacy Rule"), require Covered Entity to obtain and document satisfactory assurances from the Business Associate that the Business Associate shall appropriately safeguard PHI through a written contract; and

WHEREAS, the HIPAA Security Standards, as amended from time to time (the "Security Rule"), govern the security of PHI obtained, created or maintained electronically by covered entities and business associates as defined in HIPAA; and

WHEREAS, the Health Information Technology for Economic and Clinical Health ("HITECH") Act, found in Titles XIII and XIV of the American Recovery and Reinvestment Act of 2009, modifies certain provisions of HIPAA relating to the privacy and security of PHI; and

WHEREAS, the parties acknowledge that, in the event of a violation of HIPAA or the HITECH Act by Business Associate, Business Associate may be subject to the same civil and criminal penalties as Covered Entity would be for such violation by Covered Entity; and

WHEREAS, the parties desire to enter into this Agreement for the purpose of ensuring compliance with the requirements of HIPAA, its implementing regulations, the HITECH Act and Florida law.

NOW THEREFORE, in consideration of their mutual promises made herein, and the foregoing recitals which are material to this Agreement and incorporated hereby together with other good and valuable consideration, receipt of which is hereby acknowledged by each party, the Parties, intending to be legally bound, herein agree as follows:

1. Definitions For Use in This Agreement**.** Capitalized terms and acronyms used but not otherwise defined in this Agreement shall have the same meaning ascribed to those terms in HIPAA, the HITECH Act, and any current and future regulations promulgated under HIPAA or the HITECH Act.

2. Obligations and Activities of Business Associate. Upon request by Covered Entity, Business Associate shall provide to Covered Entity evidence of the performance of an information security assessment as required by the HIPAA Security Rule, which evidence shall be satisfactory to Covered Entity.

a. Upon request by Covered Entity, Business Associate shall provide to Covered Entity a copy of its written policies and procedures relating to the security of PHI and the name of the person responsible for implementing the HIPAA Security Rule and this Agreement on behalf of Business Associate.

b. Except as otherwise limited in this Agreement, Business Associate may use or disclose PHI to perform functions, activities or services for, or on behalf of, Covered Entity as specified in the Underlying Agreement provided that such use or disclosure would not violate the Privacy Rule. Business Associate agrees to not use or disclose PHI other than as permitted or required by this Agreement or as Required by Law, as that term is defined in HIPAA, the HITECH Act and/or applicable regulations.

c. Business Associate agrees to use appropriate safeguards to prevent use or disclosure of PHI other than as provided for by this Agreement.

d. Business Associate shall implement administrative, physical, and technical safeguards that reasonably and appropriately protect the confidentiality, integrity and availability of PHI that it creates, receives, maintains or transmits on behalf of the Covered Entity.

e. Business Associate agrees to mitigate, to the extent practicable, any harmful effect known to Business Associate of its use or disclosure of PHI in violation of the requirements of this Agreement and/or the Privacy Rule.

f. Business Associate agrees to report in writing to Covered Entity any use or disclosure of PHI not provided for by this Agreement within ten (10) calendar days after becoming aware of such use or disclosure.

g. Business Associate shall report to Covered Entity within ten (10) calendar days after becoming aware of any "security incident," as that term is defined in the HIPAA Security Rule. In its report to Covered Entity, the Business Associate shall identify: the date of the security incident, the scope of the security incident, the Business Associate's response to the security incident and the identification of the party responsible for causing the security incident, if known.

h. Business Associate shall report in writing to Covered Entity any breach involving PHI, as the term "breach" is defined in the HITECH Act, by completing the Breach Notification form attached hereto as Exhibit "A" and by reference made a part hereof. Business Associate shall provide said notification to Covered Entity of any such breach within 10 calendar days after such breach.

i. Business Associate shall indemnify, hold harmless, and reimburse Covered Entity for any costs incurred by the Covered Entity as a result of a "breach," as defined in the HITECH Act, by Business Associate, including but not limited to the cost of notification to individuals made by Covered Entity pursuant to 45 C.F.R. § 164.404 and the cost of remedial actions taken to protect individuals whose information was disclosed in violation of this Agreement HIPAA, the HITECH Act, or the regulations promulgated thereunder. Business Associate further agrees to defend, indemnify, and hold harmless Covered Entity, its officers, directors, employees, and agents, from and against all claims, liabilities, suits, judgments, fines, assessments, penalties, damages, costs, and other expenses of any kind or nature whatsoever, including without limitation, attorney's fees, expert witness fees, and costs of investigation, litigation or dispute resolution, related in any manner to or arising out of any material breach of this Agreement by Business Associate, its agents, representatives, officers, directors, employees, or subcontractors. These indemnities shall continue in full force and effect subsequent to and notwithstanding the expiration or termination of the Agreement.

j. Business Associate agrees to ensure that any agent, including a subcontractor, to whom it provides PHI received from, created by, or received by Business Associate on behalf of Covered Entity agrees to the same restrictions and conditions that apply through this Agreement to Business Associate with respect to such information.

k. Within ten (10) business days after a written request from Covered Entity, Business Associate agrees to provide access to PHI in a Designated Record Set ("DRS"), as that term is defined in HIPAA, to Covered Entity or, as directed by Covered Entity, to an Individual, as that term is defined in HIPAA, in order to meet the requirements under 45 CFR §164.524. In the event any Individual requests access to PHI directly from Business Associate, Business Associate shall forward written notice of such request to Covered Entity within ten business (10) days after such request. Any denials of access to the PHI requested shall be the responsibility of Covered Entity.

l. Business Associate agrees to make any amendment(s) to PHI in a DRS that the Covered Entity directs or agrees to pursuant to 45 CFR §164.526 at the written request of Covered Entity or an Individual, within twenty (20) business days of the written request.

m. Business Associate agrees to make internal practices, books, and records, including policies and procedures and PHI, relating to the use and disclosure of PHI received from, or created or received by Business Associate on behalf of Covered Entity, available to the Covered Entity and to the Secretary, within fifteen (15) business days after notice of the Secretary's request or in the time and manner designated by the Secretary, for purposes of the Secretary determining Covered Entity's compliance with the Privacy Rule and the Security Rule.

n. Business Associate agrees to document disclosures of PHI and information related to such disclosures as would be required for Covered Entity to respond to a request by an Individual for an accounting of disclosures of PHI in accordance with 45 CFR §164.528.

o. Business Associate agrees to provide to Covered Entity, or to an Individual at the request of the Covered Entity, or to the Individual if the request is made directly to the Business Associate by the Individual within fifteen (15) business days of written notice from Covered Entity to Business Associate, information collected in accordance with Section 2.o. of this Agreement, to permit Covered Entity to respond to a request by an Individual for an accounting of disclosures of in accordance with 45 CFR §164.528.

p. Business Associate shall comply with the privacy, security and security breach notification provisions applicable to a business associate under the HITECH Act and any regulations promulgated thereunder, including but not limited to compliance with each of the Standards and Implementation Specifications of 45 §§ C.F.R. 164.308 (Administrative Safeguards), 164.310 (Physical Safeguards), 164.312 (Technical Safeguards), 164.316 (Policies and Procedures and Documentation Requirements), and 164.410 (Notification by a Business Associate).

3. Permitted Uses and Disclosures by Business Associate - General Use and Disclosure Provisions. Except as otherwise limited in this Agreement, Business Associate may use or disclose PHI to perform functions, activities, or services for, or on behalf of, Covered Entity as specified in the Agreement, provided that such use or disclosure would not violate the Privacy Rule if done by Covered Entity or the minimum necessary policies and procedures of Covered Entity.

4. Permitted Uses and Disclosures by Business Associate - Specific Use and Disclosure Provisions.

a. Except as otherwise limited in this Agreement, Business Associate may use PHI for the proper management and administration of Business Associate or to carry out Business

Associate's legal responsibilities.

b. Except as otherwise limited in this Agreement, Business Associate may disclose PHI for the proper management and administration of Business Associate, provided that disclosures are Required By Law or Business Associate obtains reasonable assurances from the person to whom the information is disclosed that it will remain confidential and used or further disclosed only as Required By Law or for the purpose for which it was disclosed to the person, and the person notifies Business Associate of any instances of which it is aware in which the confidentiality of the information has been breached.

c. Except as otherwise limited in this Agreement, Business Associate may use PHI to provide Data Aggregation services to Covered Entity as permitted by 42 C.F.R. §164.504(e)(2)(i)(B).

d. Business Associate may use PHI to report violations of law to appropriate Federal and State authorities, consistent with 42 C.F.R. §164.502(j)(1).

5. Provisions for Covered Entity to Inform Business Associate of Privacy Practices and Restrictions.

a. Covered Entity shall notify Business Associate of any limitation(s) in its notice of privacy practices of Covered Entity in accordance with 45 CFR §164.520, to the extent that such limitation(s) may affect Business Associate's use or disclosure of PHI.

b. Covered Entity shall notify Business Associate of any changes in, or revocation of permission by Individual to use or disclose PHI, to the extent that such changes may affect Business Associate's use or disclosure of PHI.

c. Covered Entity shall notify Business Associate of any restriction on the use or disclosure of PHI that Covered Entity has agreed to in accordance with 45 CFR §164.522, to the extent that such restriction may affect Business Associate's use or disclosure of PHI.

6. Permissible Requests by Covered Entity. Covered Entity shall not request Business Associate to use or disclose PHI in any manner that would not be permissible under the Privacy Rule if done by Covered Entity.

7. Term and Termination.

a. Term. The commencement date for the term of this Agreement shall be October 1, 2016. This Agreement shall terminate when all of the PHI provided by Covered Entity to Business Associate, or created or received by Business Associate on behalf of Covered Entity, is destroyed or returned to Covered Entity, or, if it is infeasible to return or destroy PHI, protections are extended to such information in accordance with the termination provisions in this Section.

b. Termination for Cause. Upon Covered Entity's knowledge of a material breach by Business Associate, Covered Entity shall:

1) Provide an opportunity for Business Associate to cure the breach or end the violation within thirty (30) days after written notice and, if Business Associate does not cure the breach or end the violation within that time, terminate this Agreement; or

2) Immediately terminate this Agreement upon written notice if Business Associate has breached a material term of this Agreement and cure is not possible as determined at the sole discretion of Covered Entity; or

3) If neither termination nor cure is feasible, report the violation to the Secretary of the Department of Health and Human Services.

c. Effect of Termination.

1) Except as provided in paragraph (2) of this subsection, upon termination of this Agreement, for any reason, Business Associate shall return or destroy all PHI received from Covered Entity, or created or received by Business Associate on behalf of Covered Entity. This provision shall apply to PHI that is in the possession of any subcontractors or agents of Business Associate, and Business Associate has the duty to ensure that any and all of its subcontractors or agents comply with these termination provisions. Neither Business Associate, nor any of its subcontractors or agents, shall retain any copies of PHI upon termination of this Agreement.

2) In the event that Business Associate determines that returning or destroying the PHI is infeasible, Business Associate shall provide to Covered Entity written notification of the conditions that make return or destruction infeasible thirty (30) calendar days prior to the termination of the Agreement or within thirty (30) calendar days of Business Associate's receipt of notice from Covered Entity of a material breach of this Agreement by Business Associate. Upon mutual agreement of the parties that return or destruction of PHI is infeasible, Business Associate shall extend the protections of this Agreement to such PHI and limit further uses and disclosures of such PHI to those purposes that make the return or destruction infeasible, for so long as Business Associate maintains such PHI.

8. Effect on Prior Business Associate Agreements: This Agreement supersedes and replaces any existing Business Associate Agreement in effect between Business Associate and Covered Entity. Any PHI Business Associate has received from Covered Entity prior to, on, or after the date of this Agreement is subject to the terms and conditions of this Agreement.

9. Miscellaneous.

a. Regulatory References. A reference in this Agreement to a section in the Privacy Rule means the section as in effect or as amended.

b. Amendment. The Parties agree to take such action as is necessary to amend this Agreement from time to time as is necessary for Covered Entity to comply with the requirements of the Privacy Rule and HIPAA; amendments are not effective unless in writing, signed by both Parties.

Survival. The respective rights and obligations of Business Associate under Section 7.c., "Effect of Termination," and Section 2.j., regarding Indemnification, of this Agreement shall survive the termination of this Agreement.

c. Interpretation. Any ambiguity in this Agreement shall be resolved to permit Covered Entity to comply with the Privacy Rule.

d. Notice. Any notice required under this Agreement shall be sent by certified mail, return receipt requested or by hand delivery to the following persons:

Covered Entity:

_____ James T. Dinneen, County Manager

County of Volusia
123 West Indiana Avenue
DeLand, Florida 32720

With copies to:

Donna DePeyster, Chief Financial Officer
County of Volusia
123 West Indiana Avenue
DeLand, Florida 32720

Mark Wolcott, Emergency Medical Administration Director
County of Volusia
125 West Indiana Avenue
DeLand, Florida 32720

Business Associate:

Jane Shang, City Manager
City of Deltona
2345 Providence Blvd.
City of Deltona, FL 32725

e. Retroactivity. Business Associate warrants that there have been no violations of HIPAA or HITECH Act from the date of execution of the Underlying Agreement through the commencement date of this Agreement.

f. Limitation of Liability / Sovereign Immunity. Both parties expressly retain all rights, benefits and immunities of sovereign immunity in accordance with § 768.28, Florida Statutes. Regardless of anything set forth in any section of this Agreement to the contrary, nothing in this Agreement shall be deemed as a waiver of sovereign immunity or the limits of liability of the Covered Entity or the Business Associate beyond any statutory limited waiver of immunity or limits of liability which may be or may have been adopted by the Florida Legislature, and the cap on the amount and liability of each party for damages, regardless of the number or nature of claims in tort, equity, or contract, shall not exceed the dollar amount set by the legislature for tort. Nothing in this Agreement shall inure to the benefit of any third party for the purpose of allowing any claim against any of the parties, which would otherwise be barred under the doctrine of sovereign immunity or by operation of law, nor shall anything in this Agreement, including any indemnification provisions contained herein, be interpreted or otherwise construed as requiring one party to this Agreement to insure or indemnify the other for the other party's negligence or to assume any liability for the other party's negligence in contravention of the requirements of § 768.28(19), Florida Statutes.

IN WITNESS THEREOF, the parties have caused this Business Associate Agreement to be duly executed by their duly authorized representatives on the respective dates under each signature.

County of Volusia

City of Deltona
Name of Business Associate

By: _____

_____

Authorized Representative Signature
Signature

JAMES T. DINNEEN
Printed Name

COUNTY MANAGER
Title

_____
Date

By:

Authorized Representative

Jane Shang
Printed Name

City Manager
Title

_____
Date

Exhibit A
Form of Notification to Covered Entity of
Breach of Unsecured PHI

Business Associate hereby notifies Covered Entity that there has been a breach of unsecured protected health information (PHI) that Business Associate has used or has had access to under the terms of the Business Associate Agreement.

Description of the breach: _____
_____

Date of the breach: _____

Date of the discovery of the breach: _____

Name of each individual affected by the breach: _____

The types of unsecured PHI that were involved in the breach (such as full name, Social Security number, date of birth, home address, account number, or disability code): _____
_____
_____

Description of what Business Associate is doing to investigate the breach, to mitigate losses, and to protect against any further breaches: _____
_____
_____

Contact information to ask questions or learn additional information:

Name: _____

Title: _____

Address: _____
_____

Email Address: _____

Phone Number: _____

City of Deltona

2345 Providence Blvd.
Deltona, FL 32725

Agenda Memo

AGENDA ITEM: B.

TO: Mayor and Commission **AGENDA DATE:** 12/12/2016

FROM: Jane K. Shang, City Manager **AGENDA ITEM:** 8 - B

SUBJECT:
Request for Approval of AFG Matching Grant

LOCATION:
Deltona Fire Department

BACKGROUND:

The primary goal of the Assistance to Firefighters Grants (AFG) is to enhance the safety of the public and firefighters with respect to fire-related hazards by providing direct financial assistance to eligible fire departments, nonaffiliated Emergency Medical Services (EMS) organizations, and State Fire Training Academies (SFTA) for critically needed resources to equip and train emergency personnel to recognized standards, enhance operations efficiencies, foster interoperability, and support community resilience.

This is a grant we apply for each year. This year we have applied for items in three categories: Equipment, Training, and Personal Protective Equipment. This year hazardous materials and chemical, biological, radiological, nuclear, and explosive (CBRNE) is a high priority for funding through FEMA. This being the case all of the items requested on the grant is for hazardous materials, technical rescue and/or CBRNE response. The total dollar amount we have requested for grant funding is $397,308.00 with the city's matching contribution of 10% or $39,731.00.

The requested equipment helps our special operations team become more in line with National Fire Protection Agency (NFPA) 471 Standard, the Occupational Safety and Health Administration (OSHA) Hazardous Materials standards, and other recognized national standard and best practices requirements. This equipment is expensive and needed to improve the overall effectiveness and safety of the members of our special operations team.

The training money requested brings our members up to NFPA 472 requirements as hazardous materials technicians. Since our team is a State recognized Light Technical Rescue Team (LTRT) we can be deployed throughout the state after a natural disaster such as a hurricane, tornado, etc. This training averages about $1500/person. This grant also covers training for structural collapse technicians which is necessary for our LTRT. Training props are also a part of the grant and affords our team members the ability to stay proficient in their hazmat skills as well as meet the mandatory recurrent training requirements of NFPA 472.
The personnel protective equipment brings us into compliance with the requirements of NFPA 1951 and 1999 for technical rescue and hazardous materials protective ensemble. Currently our team

members are wearing their duty uniform which provides for limited protection against the environmental hazards during technical rescue special operations incidents.

Our special operations team responses to all special hazards operations, which includes hazardous materials, CBRNE, and technical rescue events, within our local jurisdiction. We also respond outside our jurisdiction providing special operations services to our surrounding communities. In the city of Deltona we have several special hazards in the city such as natural gas pipeline on the southern end of the city, Interstate 4, and fuel stations with high ethanol fuel. In the surrounding communities we have operating power plants, CSX railways, Amtrac, and the St Johns River.

In order to proceed with the grant, we are requesting approval to proceed with submittal of the grant and the city approving 10% investment. We believe this will enhance the safety of our community and our members.

COST:
10% or $39,731.00
Fund 150 - Grant Match Fund

SOURCE OF FUNDS:
AFT Grant - $397,308.00
City Investment - 10% matching grant or $39,731.00

ORIGINATING DEPARTMENT:
Deltona Fire Department

STAFF RECOMMENDATION PRESENTED BY:
Bill Snyder, Fire Chief, Deltona Fire Department. Staff recommends that the City Commission approve the submittal of AFG Grants and approval the city matching grant of up to $39,731.00.

POTENTIAL MOTION:
I hereby move to approve the request to submit the AFG Grants and approve the city's matching grant of up to $39,731.00.

Entire Application

Applicant's Acknowledgements

* I certify the DUNS number in this application is our only DUNS number and we have confirmed it is active in SAM.gov as the correct number.

* As required per 2 CFR ¿ 25, I certify that prior to submission of this application I have checked the DUNS number listed in this application against the SAM.gov website and it is valid and active at time of submission.

* I certify that the applicant organization has consulted the appropriate Notice of Funding Opportunity and that all requested activities are programmatically allowable, technically feasible and can be completed within the award's one (1) year Period of Performance (POP).

* I certify that the applicant organization is aware that this application period is open from 10/11 to 11/18/2016 and will close at 5 PM EST; further that the applicant organization is aware that once an application is submitted, even if the application period is still open, a submitted application cannot be changed or released back to the applicant for modification.

* I certify that the applicant organization is aware that it is solely the applicant organization's responsibility to ensure that all activities funded by this award(s) comply with Federal Environmental planning and Historic Preservation (EHP) regulations, laws, and Executive Orders as applicable. The EHP Screening Form designed to initiate and facilitate the EHP Review is available at: http://www.fema.gov/media-library-data/1431970163011-80ce3cd907072a91295b1627c56d8fd2/gpd_ehp_screening_form_51815.pdf

* I certify that the applicant organization is aware that the applicant organization is ultimately responsible for the accuracy of all application information submitted. Regardless of the applicant's intent, the submission of information that is false or misleading may result in actions by FEMA that include, but are not limited to: the submitted application not being considered for award, an existing award being locked pending investigation, or referral to the Office of the Inspector General.

Signed by **Suzanne Houle** on **2016-11-15 15:34:55.0**

Overview

* **Did you attend one of the workshops conducted by an AFG regional fire program specialist?** No, I have not attended workshop * **Did you participate in a webinar that was conducted by AFG?** No
* **Are you a member, or are you currently involved in the management, of the fire department or nonaffiliated EMS organization or a State Fire Training Academy applying for this grant with this application?**

Yes, I am a member/officer of this applicant

If you answered "No", please **complete** the information below. If you answered "Yes", please skip the Preparer Information section.
Fields marked with an * are required.

Preparer Information	
Preparer's Name	
Address 1	
Address 2	
City	
State Zip	- Need help for ZIP+4?

In the space below please list the person your organization has selected to be the primary point of contact for this grant. This should be a department officer or member of the organization who will see this grant through completion, including closeout. Reminder: if this person changes at any time during the period of performance please update this information. Please list only phone numbers where we can get in direct contact with the POC.

Primary Point of Contact	
* Title	Logistics Manager
Prefix (select one)	N/A
* First Name	Suzanne
Middle Initial	
* Last Name	Houle
* Primary Phone	386-878-8163 Ext. Type work
* Secondary Phone	407-314-7780 Ext. Type cell
Optional Phone	Type
Fax	386-878-8161
* Email	shoule@deltonafl.gov

Contact Information

Alternate Contact Information Number 1	
* Title	Deputy Chief
Prefix (select one)	N/A
* First Name	Chrisopher
Middle Initial	
* Last Name	Sievert
* Primary Phone	386-575-6903 Ext. Type work
* Secondary Phone	386-804-3350 Ext. Type cell
Optional Phone	Type
Fax	386-860-7198
* Email	csievert@deltonafl.gov

Alternate Contact Information Number 2	
* Title	Deputy Chief
Prefix (select one)	N/A
* First Name	William
Middle Initial	
* Last Name	Swisher
* Primary Phone	386-575-6904 Ext. Type work
* Secondary Phone	386-575-6901 Ext. Type cell
Optional Phone	Type
Fax	386-860-7198
* Email	bswisher@deltonafl.gov

Applicant Information

EMW-2016-FO-06822
Originally submitted on 11/18/2016 by Suzanne Houle (Userid: deltonafd1)

Contact Information:

Address: 1685 Providence Blvd.
City: Deltona
State: Deltona
Zip: 32725
Day Phone: 3868788163
Evening Phone: 4073307189
Cell Phone: 4073147780
Email: shoule@deltonafl.gov

Application number is EMW-2016-FO-06822

* Organization Name	City of Deltona
* Type of Applicant	Fire Department/Fire District
* **Fire Department/District, nonaffiliated EMS, and Regional applicants**, select type of Jurisdiction Served : If "Other", please enter the type of Jurisdiction	City
SAM.gov **(System For Award Management)**	
* What is the legal name of your Entity as it appears in SAM.gov? Note: This information must match your SAM.gov profile if your organization is using the DUNS number of your Jurisdiction.	Deltona, City of
* What is the legal business address of your Entity as it appears in SAM.gov? Note: This information must match your SAM.gov profile if your organization is using the DUNS number of your Jurisdiction.	
* Mailing Address 1	2345 Providence Blvd.
Mailing Address 2	
* City	Deltona
* State	Florida
* Zip	32725 - 1806 Need help for ZIP+4?
* Employer Identification Number (e.g. 12-3456789) Note: This information must match your SAM.gov profile.	59-3348668
* Is your organization using the DUNS	Yes

number of your Jurisdiction?	
I certify that my organization is authorized to use the DUNS number of my Jurisdiction provided in this application. (Required if you selected Yes above)	☑
* What is your 9 digit DUNS number? (call 1-866-705-5711 to get a DUNS number)	932661747
If you were issued a 4 digit number (DUNS plus 4) by your Jurisdiction in addition to your 9 digit number please enter it here. Note: This is only required if you are using your Jurisdiction's DUNS number and have a separate bank account from your Jurisdiction. Leave the field blank if you are using your Jurisdiction's bank account or have your own DUNS number and bank account separate from your Jurisdiction.	
* Is your DUNS Number registered in SAM.gov (System for Award Management previously CCR.gov)?	Yes
* I certify that my organization/entity is registered and active at SAM.gov and registration will be renewed annually in compliance with Federal regulations. I acknowledge that the information submitted in this application is accurate, current and consistent with my organization's/entity's SAM.gov record.	☑
Headquarters or Main Station Physical Address	
* Physical Address 1	1685 Providence Blvd.
Physical Address 2	
* City	Deltona
* State	Florida
* Zip	32725 - 4928 Need help for ZIP+4?
Mailing Address	
* Mailing Address 1	2345 Providence Blvd.
Mailing Address 2	
* City	Deltona
* State	Florida
* Zip	32725 - 1806 Need help for ZIP+4?
Bank Account Information	
* The bank account being used is: (Please select one from right)	

	Maintained by my Jurisdiction
Note: The following banking information must match your SAM.gov profile.	
* Type of bank account	Checking
* Bank routing number - 9 digit number on the bottom left hand corner of your check	063000021
* **Your account number**	2000637892032
Additional Information	
* For this fiscal year (Federal) is your organization receiving Federal funding from any other grant program that may duplicate the purpose and/or scope of this grant request?	No
* If awarded, will your organization expend more than $750,000 in Federal funds during your organization's fiscal year? If "Yes", your organization will be required to undergo an A-133 audit. Reasonable costs incurred for an A-133 audit are an eligible expenditure and should be included in the applicant's proposed budget. Please enter audit costs only once under any "Additional Funding" in the "Request Details" section of the application.	Yes
* Is the applicant delinquent on any Federal debt?	No
If you answered yes to any of the additional questions above, please provide an explanation in the space provided below:	
The City of Deltona has Federal housing funds through CDBG, NSP1 and NSP3 programs and pays for an A-133 audit annually.	

Fire Department/Fire District Department Characteristics (Part I)

* Is this application being submitted on behalf of a Federal Fire Department or organization contracted by the Federal government which is solely responsible for the suppression of fires on Federal property?	No
* What kind of organization do you represent?	All Paid/Career
If you answered "Combination", above, how many career members in your organization? (whole numbers only)	
If you answered "Volunteer" or "Combination" or "Paid on-call", how many of your volunteer Firefighters are paid members from another career department? (whole numbers only)	
* What type of community does your organization serve?	Urban
* Is your Organization considered a Metro Department? (Over 350 paid career Firefighters)	No

* What is the square mileage of your first-due response area? (whole number only)	46
* What percentage of your response area is protected by hydrants? (whole number only)	90 %
* In what county/parish is your organization physically located? If you have more than one station, in what county/parish is your main station located?	Volusia
* Does your organization protect critical infrastructure?	Yes
If "Yes", please describe the critical infrastructure protected below:	
The City of Deltona protects Florida Power & Light substation, Duke Energy substation, City of Deltona Water Department wells and pumps, Interstate 4/St. Johns River bridge, CSX railroad, Amtrak, Sunrail (Florida commuter train	
* What percentage of your primary response area is for agriculture, wildland, open space, or undeveloped properties? ¿	20 %
* What percentage of your primary response area is for commercial and industrial purposes?	33 %
* What percentage of your primary response area is used for residential purposes?	47 %
* What is the permanent resident population of your Primary/First-Due Response Area or jurisdiction served? (whole numbers only)	86890
* Do you have a seasonal increase in population?	No
If "Yes" what is your seasonal increase in population?	
* How many active firefighters does your department have who perform firefighting duties? (whole numbers only)	73
* How many members in your department/organization are trained to the level of EMR or EMT, Advanced EMT or Paramedic? (whole numbers only)	73
Does your department have a Community Paramedic program?	No
How many personnel are trained to the Community Paramedic level? (whole numbers only)	
* How many stations are operated by your organization? (whole numbers only)	5
* Is your department compliant to your local Emergency Management standard for the National Incident Management System (NIMS)?	Yes
* Do you currently report to the National Fire Incident Reporting System (NFIRS)? Note: You will be required to report to NFIRS for the entire period of the grant. AFG does not require NFIRS reporting for Nonaffiliated EMS Organizations and State Fire Training Academy.	Yes

If you answered "Yes" above, please enter your FDIN/FDID FDIN/FDID 	08021
* How many of your active firefighters are trained to the level of Firefighter I (or equivalent)? (whole numbers only)	73
* How many of your active firefighters are trained to the level of Firefighter II (or equivalent)? (whole numbers only, include all personnel who have attained Firefighter I)	73
Are you requesting training funds in this application to bring 100% of your firefighters into compliance with NFPA 1001?	No

If you indicated that less than 100% of your firefighters are trained to the Firefighter II level and you are not asking for training funds to bring everyone to the Firefighter II level in this application, please describe in the box below your training program and your plans to bring your membership up to Firefighter II.

* What services does your organization provide?

Advanced Life Support	Emergency Medical Responder	Rescue Operational Level
	Haz-Mat Operational Level	Rescue Technical Level
Basic Life Support	Haz-Mat Technical Level	Structural Fire Suppression
		Wildland Fire Suppression

* Please describe your organization and/or community that you serve.

The City of Deltona is a fairly new city, having been incorporated in 1995. We are now the largest city in Volusia County, FL. The City's population has grown considerably since that time, with a population of nearly 90,000. The City of Deltona Fire Department operates 5 fire stations, utilizing 1 aerial truck, 4 engines, 2 rescue/ambulance units, a Special Operations squad, and numerous support vehicles. Over 80% of our calls are medical emergencies.
Our Fire Department operates a local special operations team which includes all aspects of technical rescue and hazardous materials response. We are currently in negotiations with the City of Orange City and City of Deland to establish a regional special operations team. This regional team would respond to all special hazard operations covering all of southwest Volusia County. This area is adjacent to the St. Johns River and Lake Monroe, and responds to calls for service to CSX railways, SunRail (State of Florida commuter train service), Amtrak, State Road 415, and Interstate 4. Along with being a regional response team, Deltona's special operations team has been designated as Florida Task Force LTRT 532, a Type IV Light Technical Rescue Team as part of the Florida Urban Search and Rescue System.

Fire Department Characteristics (Part II)

	2015	2014	2013
* What is the total number of fire-related civilian fatalities in your jurisdiction over the last three calendar years?	0	0	1
* What is the total number of fire-related civilian injuries in your jurisdiction over the last three calendar years?	6	8	6
* What is the total number of line of duty member fatalities in your jurisdiction over the last three calendar years?	0	0	0
* What is the total number of line of duty member injuries in your jurisdiction over the last three calendar years?	13	1	3
*Over the last three years, what was your organization's operating budget?	8852363		
* How much of your TOTAL budget is dedicated to personnel costs (salary, overtime and fringe benefits)?	83		
Does your department have any rainy day reserves, emergency funds, or capital outlay?	No		
If yes, what is the total amount currently set aside?			
* What percentage of your annual operating budget is derived from: Enter numbers only, percentages must sum up to 100%	2015	2014	2013
Taxes?	100 %	100 %	100 %
Bond Issues?	0 %	0 %	0 %
EMS Billing?	0 %	0 %	0 %
Grants?	0 %	0 %	0 %
Donations?	0 %	0 %	0 %
Fund drives?	0 %	0 %	0 %
Fee for Service?	0 %	0 %	0 %

* Applicants should describe their financial need and how consistent it is with the intent of the AFG Program. This statement should include details describing the applicant's financial distress, including summarizing budget constraints, unsuccessful attempts to obtain vehicle and outside funding, and proving the trouble is out of their control.

As with many areas in the United States, The City of Deltona was hit hard by the recession in 2007-2008. Housing prices dropped 30-40% in most areas and nearly 30% of the mortgages in the city were foreclosed on. As a result, the ad valorem taxes were also heavily hit, with a 30% drop in tax revenue in that first year. Unemployment was also a factor as many of the citizens in Deltona were employed in the construction and service/tourist-related industries. Consequently, an austerity measure was implemented by the administration to counteract this huge drop in funding. Things have gotten better, but we are still recovering from this financial devastation. Our current budget allows for $12,000 for Special Operation equipment, only 4% of the amount requested in this grant proposal. As you know, the recession, and our resulting financial crisis was out of our control. Special Operations equipment was eliminated from our budgets as a "luxury", and therefore, "made do" with what we already had and only replaced what we absolutely had to due to breakage. This grant will give us the opportunity to replace existing out of date equipment, provide training and PPE, and expand our mission to serve the citizen of Deltona and southwest Volusia County.

* How many vehicles does your organization have in each type or class of vehicle listed below? **You must include vehicles that are leased or on long-term loan as well as any vehicles that have been ordered or otherwise currently under contract for purchase or lease by your organization but not yet in your possession.** (Enter numbers only and enter 0 if you do not have any of the vehicles below.)

Type or Class of Vehicle	Number of Front Line Apparatus	Number of Reserve Apparatus	Number of Seated Riding Positions
Engines or Pumpers (pumping capacity of 750 gpm or greater and water capacity of 300 gallons or more): Pumper, Pumper/Tanker, Rescue/Pumper, Foam Pumper, CAFS Pumper, Type I or Type II Engine Urban Interface	4	3	28
Ambulances for transport and/or emergency response:	1	2	6
Tankers or Tenders (pumping capacity of less than 750 gallons per minute (gpm) and water capacity of 1,000 gallons or more):	0	0	0
Aerial Apparatus: Aerial Ladder Truck, Telescoping, Articulating, Ladder Towers, Platform, Tiller Ladder Truck, Quint	1	0	4
Brush/Quick attack (pumping capacity of less than 750 gpm and water carrying capacity of at least 300 gallons): Brush Truck, Patrol Unit (Pickup w/ Skid Unit), Quick Attack Unit, Mini-Pumper, Type III Engine, Type IV Engine, Type V Engine, Type VI Engine, Type VII Engine	3	0	6
Rescue Vehicles: Rescue Squad, Rescue (Light, Medium, Heavy), Technical Rescue Vehicle, Hazardous Materials Unit	1	0	2
Additional Vehicles: EMS Chase Vehicle, Air/Light Unit, Rehab Units, Bomb Unit, Technical Support (Command, Operational Support/Supply), Hose Tender, Salvage Truck, ARFF (Aircraft Rescue Firefighting), Command/Mobile Communications Vehicle	5	1	12

Fire Department Call Volume

	2015	2014	2013
* **Summary** of responses per year by category (Enter whole number only. If you have no calls for any of the categories, Enter 0)			
Fire - NFIRS Series 100	203	248	244
Overpressure Rupture, Explosion, Overheat (No Fire) - NFIRS Series 200	4	4	1
Rescue & Emergency Medical Service Incident - NFIRS Series 300	7031	6921	6876
Hazardous Condition (No Fire) - NFIRS Series 400	260	211	184
Service Call - NFIRS Series 500	448	439	412

Good Intent Call - NFIRS Series 600	1156	996	829
False Alarm & False Call - NFIRS Series 700	474	470	381
Severe Weather & Natural Disaster - NFIRS Series 800	8	10	4
Special Incident Type - NFIRS Series 900	24	32	41
FIRES			
* How many responses per year by category? (Enter whole number only. If you have no calls for any of the categories, Enter 0)			
Of the NFIRS Series 100 calls, how many are "Structure Fire" (NFIRS Codes 111-120)	73	99	79
Of the NFIRS Series 100 calls, how many are "Vehicle Fire" (NFIRS Codes 130-138)	31	29	41
Of the NFIRS Series 100 calls, how many are "Vegetation Fire" (NFIRS Codes 140-143)	62	91	92
What is the total acreage of all vegetation fires?	11	31	13
RESCUE AND EMERGENCY MEDICAL SERVICE INCIDENTS			
* How many responses per year by category? (Enter whole number only. If you have no calls for any of the categories, Enter 0)			
Of the NFIRS Series 300 calls, how many are "Motor Vehicle Accidents" (NFIRS Codes 322-324)	313	533	613
Of the NFIRS Series 300 calls, how many are "Extrications from Vehicles" (NFIRS Code 352)	50	37	43
Of the NFIRS Series 300 calls, how many are "Rescues" (NFIRS Codes 300, 351, 353-381)	55	35	37
How many EMS-BLS Response Calls	2791	2882	2642
How many EMS-ALS Response Calls	2749	2701	2955
How many EMS-BLS Scheduled Transports	0	0	0
How many EMS-ALS Scheduled Transports	0	0	0
How many Community Paramedic Response Calls	0	0	0
MUTUAL AND AUTOMATIC AID			
* How many responses per year by category? (Enter whole number only. If you have no calls for any of the categories, Enter 0)			
How many times did your organization receive Mutual Aid?	0	0	0
How many times did your organization receive Automatic Aid?	3	0	0
How many times did your organization provide Mutual Aid?	7	10	7
How many times did your organization provide Automatic Aid?	12	9	13
Of the Mutual and Automatic Aid responses, how many were structure fires?	14	12	17

-

Request Information

1. Select a program for which you are applying. If you are interested in applying under both Vehicle Acquisition and Operations and Safety, and/or regional application **you will need to submit separate applications.**.
Program Name
Operations and Safety
2. Will this grant benefit more than one organization?
Yes
If you answered "Yes" to Question 2, please explain how this request benefits other organizations below:
The City of Deltona operates a local special operations team which includes all aspects of technical rescue and hazardous materials response. We are currently in negotiations with the City of Orange City and City of Deland to establish a regional special operations team. This regional team would respond to all special hazard operations covering all of southwest Volusia County. This area is adjacent to the St. Johns River and Lake Monroe, and responds to calls for service to CSX railways, SunRail, Amtrak, State Road 415, and Interstate 4. Along with being a regional response team, Deltona's special operations team has been designated as Florida Task Force LTRT 532.
3. Enter grant-writing fee associated with the preparation of this request. Enter 0 if there is no fee.
$0

* 4. Are you requesting a Micro Grant? A Micro Grant is limited to $25,000 Federal share. Modification to Facilities activity is ineligible for Micro Grants.	No

Request Details

The activities for program **Operations and Safety** are listed in the table below.

Activity	Number of Entries	Total Cost	Additional Funding
Equipment	20	$ 270,009	$ 0
Modify Facilities	0	$ 0	$ 0
Personal Protective Equipment	1	$ 72,000	$ 0
Training	4	$ 55,299	$ 0
Wellness and Fitness Programs	0	$ 0	$ 0

Grant-writing fee associated with the preparation of this request.	$0

Equipment

Equipment Details	
1. What equipment will your organization purchase with this grant?	IDLH Monitoring Equipment
* Please provide a detailed description of the item selected above.	Wireless HAZMAT weather system - provides real time information in conjunction with CAMEO and ALOHA software; tracks temperature, humidity, wind speed and direction, barometric pressure, heat index; monitors plume dispersion; nuclear radiation detector;needed for up to date weather information curing a hazmat and/or CBRNE related incident
2. Number of units: (whole number only)	2
3. Cost per unit: (whole dollar amounts only; this amount should reflect any volume discounts, rebates, etc.)	$ 5680
4. Generally the equipment purchased under this grant program will:	
Buy equipment for the first time (never owned before)	
5. Will the equipment being requested bring the organization into voluntary compliance with a national standard, e.g. compliance with NFPA, OSHA, etc? In your Narrative Statement, please explain how this equipment will bring the organization into voluntary compliance.	Yes
6. Is your department trained in the proper use of the equipment being requested?	No
7. Are you requesting funding to be trained for these item(s)? (Funding for requested training should be requested in the Equipment Additional Funding section).(Under the Action column select Update Additional Funding)	No
8. If you are not requesting training funds through this application, will you obtain training for this equipment through other sources?	Yes

Equipment

Equipment Details	
1. What equipment will your organization purchase with this grant?	Responder Rehab Equipment
* Please provide a detailed description of the item selected above.	Kestrel 5400 or similar monitor; Heat Stress Monitor to monitor heat stress for firefighters during firefighting, CBRNE, and hazmat incidents; provides on-screen alarms when conditions enter the caution and danger zones, providing clear and immediate guidance that heat illness prevention steps must be taken. Clothing levels can also be customized, making the Kestrel 5400 particularly useful in activities requiring heavy protective gear which worsens heat stress.
2. Number of units: (whole number only)	2
3. Cost per unit: (whole dollar amounts only; this amount should reflect any volume discounts, rebates, etc.)	$ 565
4. Generally the equipment purchased under this grant program will:	
Buy equipment for the first time (never owned before)	
5. Will the equipment being requested bring the organization into voluntary compliance with a national standard, e.g. compliance with NFPA, OSHA, etc? In your Narrative Statement, please explain how this equipment will bring the organization into voluntary compliance.	Yes
6. Is your department trained in the proper use of the equipment being requested?	No
7. Are you requesting funding to be trained for these item(s)? (Funding for requested training should be requested in the Equipment Additional Funding section).(Under the Action column select Update Additional Funding)	No
8. If you are not requesting training funds through this application, will you obtain training for this equipment through other sources?	Yes

-

Equipment

Equipment Details	
1. What equipment will your organization purchase with this grant?	Monitoring and Sampling Devices
* Please provide a detailed description of the item selected above.	Leak detector - needed for use with gas chromatography and mass spectrometer to detect gas leaks for accurate testing; Audible tone indicates the severity of a leak; Redesigned circuitry offers 12 hours of operation between charges; Detects a broad range of gases; Ex rated for use with hydrogen and other explosive gases; Detectable Gases: Helium, nitrogen, argon, carbon dioxide, hydrogen
2. Number of units: (whole number only)	1
3. Cost per unit: (whole dollar amounts only; this amount should reflect any volume discounts, rebates, etc.)	$ 960
4. Generally the equipment purchased under this grant program will:	
Buy equipment for the first time (never owned before)	
5. Will the equipment being requested bring the organization into voluntary compliance with a national standard, e.g. compliance with NFPA, OSHA, etc? In your Narrative Statement, please explain how this equipment will bring the organization into voluntary compliance.	No
6. Is your department trained in the proper use of the equipment being requested?	No
7. Are you requesting funding to be trained for these item(s)? (Funding for requested training should be requested in the Equipment Additional Funding section).(Under the Action column select Update Additional Funding)	No
8. If you are not requesting training funds through this application, will you obtain training for this equipment through other sources?	Yes

-

Equipment

Equipment Details	
1. What equipment will your organization purchase with this grant?	Basic Haz-Mat Response Equipment
* Please provide a detailed description of the item selected above.	Confined space communications system - multi purpose, multiuser hardline communication system; provides hands free communications between victim and the rescuers; to improve communications abilities during a technical rescue incident for our regional response team
2. Number of units: (whole number only)	1
3. Cost per unit: (whole dollar amounts only; this amount should reflect any volume discounts, rebates, etc.)	$ 16608
4. Generally the equipment purchased under this grant program will:	
Replace obsolete or damaged equipment that can no longer meet the applicable standards	
If you selected "Replace obsolete or damaged equipment" (from Q4) above, please specify the age of equipment in years.	13
5. Will the equipment being requested bring the organization into voluntary compliance with a national standard, e.g. compliance with NFPA, OSHA, etc? In your Narrative Statement, please explain how this equipment will bring the organization into voluntary compliance.	Yes
6. Is your department trained in the proper use of the equipment being requested?	No
7. Are you requesting funding to be trained for these item(s)? (Funding for requested training should be requested in the Equipment Additional Funding section).(Under the Action column select Update Additional Funding)	No
8. If you are not requesting training funds through this application, will you obtain training for this equipment through other sources?	No

Equipment

Equipment Details	
1. What equipment will your organization purchase with this grant?	CBRNE-related Equipment
* Please provide a detailed description of the item selected above.	Delsar life detector and search cam - seismic/acoustic listening device used to detect and locate live victims trapped in collapsed structures, explosions, landslides, mine disasters, and cave-ins; to increase the abilities of rescuers and reduce time to locate trapped victims from building collapse or terrorist CRBNE incident
2. Number of units: (whole number only)	1
3. Cost per unit: (whole dollar amounts only; this amount should reflect any volume discounts, rebates, etc.)	$ 13739
4. Generally the equipment purchased under this grant program will:	
Buy equipment for the first time (never owned before)	
5. Will the equipment being requested bring the organization into voluntary compliance with a national standard, e.g. compliance with NFPA, OSHA, etc? In your Narrative Statement, please explain how this equipment will bring the organization into voluntary compliance.	Yes
6. Is your department trained in the proper use of the equipment being requested?	No
7. Are you requesting funding to be trained for these item(s)? (Funding for requested training should be requested in the Equipment Additional Funding section).(Under the Action column select Update Additional Funding)	No
8. If you are not requesting training funds through this application, will you obtain training for this equipment through other sources?	Yes

-

Equipment

Equipment Details	
1. What equipment will your organization purchase with this grant?	Decon, Clean-Up, Containment and Packaging Equipment
* Please provide a detailed description of the item selected above.	Liquid decontamination containment device - The Collapsible Wall Ultra-Containment Berm features an economical design that sets up quickly and provides secure containment. PVC Sidewall Assemblies provide sturdy support for the containment area but are quickly lowered easy access. Great for spill containment of large quantities of drums, vehicles, frac tanks or other larger containers; to reduce/prevent ground contamination from hazardous materials leaks
2. Number of units: (whole number only)	1
3. Cost per unit: (whole dollar amounts only; this amount should reflect any volume discounts, rebates, etc.)	$ 7832
4. Generally the equipment purchased under this grant program will:	
Buy equipment for the first time (never owned before)	
5. Will the equipment being requested bring the organization into voluntary compliance with a national standard, e.g. compliance with NFPA, OSHA, etc? In your Narrative Statement, please explain how this equipment will bring the organization into voluntary compliance.	Yes
6. Is your department trained in the proper use of the equipment being requested?	Yes
7. Are you requesting funding to be trained for these item(s)? (Funding for requested training should be requested in the Equipment Additional Funding section).(Under the Action column select Update Additional Funding)	No
8. If you are not requesting training funds through this application, will you obtain training for this equipment through other sources?	No

Equipment

Equipment Details	
1. What equipment will your organization purchase with this grant?	Basic Haz-Mat Response Equipment
* Please provide a detailed description of the item selected above.	Grounding and bonding kit - to be used to prevent arcing while operating in an IDLH atmosphere thereby providing a safer working condition for personnel during a hazmat incident.
2. Number of units: (whole number only)	1
3. Cost per unit: (whole dollar amounts only; this amount should reflect any volume discounts, rebates, etc.)	$ 2900
4. Generally the equipment purchased under this grant program will:	
Buy equipment for the first time (never owned before)	
5. Will the equipment being requested bring the organization into voluntary compliance with a national standard, e.g. compliance with NFPA, OSHA, etc? In your Narrative Statement, please explain how this equipment will bring the organization into voluntary compliance.	Yes
6. Is your department trained in the proper use of the equipment being requested?	Yes
7. Are you requesting funding to be trained for these item(s)? (Funding for requested training should be requested in the Equipment Additional Funding section).(Under the Action column select Update Additional Funding)	No
8. If you are not requesting training funds through this application, will you obtain training for this equipment through other sources?	No

Equipment

Equipment Details	
1. What equipment will your organization purchase with this grant?	Basic Haz-Mat Response Equipment
* Please provide a detailed description of the item selected above.	Copper grounding rods - to be used in conjunction with the Grounding and Bonding Kit for the prevention of arcing in an IDLH atmosphere; to provide a safer working condition for personnel
2. Number of units: (whole number only)	12
3. Cost per unit: (whole dollar amounts only; this amount should reflect any volume discounts, rebates, etc.)	$ 28
4. Generally the equipment purchased under this grant program will:	
Buy equipment for the first time (never owned before)	
5. Will the equipment being requested bring the organization into voluntary compliance with a national standard, e.g. compliance with NFPA, OSHA, etc? In your Narrative Statement, please explain how this equipment will bring the organization into voluntary compliance.	Yes
6. Is your department trained in the proper use of the equipment being requested?	Yes
7. Are you requesting funding to be trained for these item(s)? (Funding for requested training should be requested in the Equipment Additional Funding section).(Under the Action column select Update Additional Funding)	No
8. If you are not requesting training funds through this application, will you obtain training for this equipment through other sources?	No

-

Equipment

Equipment Details	
1. What equipment will your organization purchase with this grant?	Decon, Clean-Up, Containment and Packaging Equipment
* Please provide a detailed description of the item selected above.	Decontamination corridor/12 ft IRT conveyor system - lightweight and portable system to ensure readiness to accept nonambulatory patients into any decontamination system; to provide appropriate and rapid decontamination for hazmat and CBRNE incidents to reduce risks to first responders
2. Number of units: (whole number only)	4
3. Cost per unit: (whole dollar amounts only; this amount should reflect any volume discounts, rebates, etc.)	$ 2161
4. Generally the equipment purchased under this grant program will:	
Buy equipment for the first time (never owned before)	
5. Will the equipment being requested bring the organization into voluntary compliance with a national standard, e.g. compliance with NFPA, OSHA, etc? In your Narrative Statement, please explain how this equipment will bring the organization into voluntary compliance.	Yes
6. Is your department trained in the proper use of the equipment being requested?	Yes
7. Are you requesting funding to be trained for these item(s)? (Funding for requested training should be requested in the Equipment Additional Funding section).(Under the Action column select Update Additional Funding)	No
8. If you are not requesting training funds through this application, will you obtain training for this equipment through other sources?	No

Equipment

Equipment Details	
1. What equipment will your organization purchase with this grant?	Decon, Clean-Up, Containment and Packaging Equipment
* Please provide a detailed description of the item selected above.	IRT High capacity decon system - for rapid and effective onsite NBC decontamination of personnel and with maximum flexibility for multiple decontamination setups; ¿Customized transport trailer provides centralized storage, power distribution and lighting to effectively respond to incidents with necessary equipment; ¿Patent-pending Active Curtains saturate patients with directional 360° of spray with five nozzles per station; ¿Conveyors with articulating frame and matching transfer boards;
2. Number of units: (whole number only)	1
3. Cost per unit: (whole dollar amounts only; this amount should reflect any volume discounts, rebates, etc.)	$ 31795
4. Generally the equipment purchased under this grant program will:	
Buy equipment for the first time (never owned before)	
5. Will the equipment being requested bring the organization into voluntary compliance with a national standard, e.g. compliance with NFPA, OSHA, etc? In your Narrative Statement, please explain how this equipment will bring the organization into voluntary compliance.	Yes
6. Is your department trained in the proper use of the equipment being requested?	Yes
7. Are you requesting funding to be trained for these item(s)? (Funding for requested training should be requested in the Equipment Additional Funding section).(Under the Action column select Update Additional Funding)	No
8. If you are not requesting training funds through this application, will you obtain training for this equipment through other sources?	No

Equipment

Equipment Details	
1. What equipment will your organization purchase with this grant?	Basic Haz-Mat Response Equipment
* Please provide a detailed description of the item selected above.	Lid Loc Dome Clamps - used for MC306 or DOT 406 cargo tank dome lid to control the loss of product within seconds; required equipment for spill control use on the major interstate highway that runs through our area and is a replacement for out dated/obsolete equipment already in possession
2. Number of units: (whole number only)	1
3. Cost per unit: (whole dollar amounts only; this amount should reflect any volume discounts, rebates, etc.)	$ 925
4. Generally the equipment purchased under this grant program will:	
Replace obsolete or damaged equipment that can no longer meet the applicable standards	
If you selected "Replace obsolete or damaged equipment" (from Q4) above, please specify the age of equipment in years.	13
5. Will the equipment being requested bring the organization into voluntary compliance with a national standard, e.g. compliance with NFPA, OSHA, etc? In your Narrative Statement, please explain how this equipment will bring the organization into voluntary compliance.	Yes
6. Is your department trained in the proper use of the equipment being requested?	Yes
7. Are you requesting funding to be trained for these item(s)? (Funding for requested training should be requested in the Equipment Additional Funding section).(Under the Action column select Update Additional Funding)	No
8. If you are not requesting training funds through this application, will you obtain training for this equipment through other sources?	No

-

Equipment

Equipment Details	
1. What equipment will your organization purchase with this grant?	Decon, Clean-Up, Containment and Packaging Equipment
* Please provide a detailed description of the item selected above.	Portable decontamination shower - 3 shower stall area for decon; 100 gallons of water in each of the 3 stalls; with dirty entrance-clean exit doors; roll up windows; 7 spray nozzle heads; quick disconnects for shower heads/trigger guns; has air-lock system; reflective striping; Simply inflate the unit and plug into a water supply; to provide rapid decontamination of patients and/or the hazmat team personnel to eliminate exposure time or chance of exposure
2. Number of units: (whole number only)	1
3. Cost per unit: (whole dollar amounts only; this amount should reflect any volume discounts, rebates, etc.)	$ 13591
4. Generally the equipment purchased under this grant program will:	
Buy equipment for the first time (never owned before)	
5. Will the equipment being requested bring the organization into voluntary compliance with a national standard, e.g. compliance with NFPA, OSHA, etc? In your Narrative Statement, please explain how this equipment will bring the organization into voluntary compliance.	Yes
6. Is your department trained in the proper use of the equipment being requested?	Yes
7. Are you requesting funding to be trained for these item(s)? (Funding for requested training should be requested in the Equipment Additional Funding section).(Under the Action column select Update Additional Funding)	No
8. If you are not requesting training funds through this application, will you obtain training for this equipment through other sources?	No

-

Equipment

Equipment Details	
1. What equipment will your organization purchase with this grant?	IDLH Monitoring Equipment
* Please provide a detailed description of the item selected above.	Photo-ionization detector point VOC - combines a photoionization detector (PID) with multigas monitoring into one efficient and user friendly portable device; measures volatile organic compounds and other gases in concentrations from sub parts per million to 10,000 parts per million; PID produces instantaneous readings and operates continuously; features ultra loud auditory alarms and multidirectional ultra bright LED alarms alert users to potentially dangerous atmospheric conditions
2. Number of units: (whole number only)	5
3. Cost per unit: (whole dollar amounts only; this amount should reflect any volume discounts, rebates, etc.)	$ 5615
4. Generally the equipment purchased under this grant program will:	
Increase the organization's available supply of the requested item(s)	
5. Will the equipment being requested bring the organization into voluntary compliance with a national standard, e.g. compliance with NFPA, OSHA, etc? In your Narrative Statement, please explain how this equipment will bring the organization into voluntary compliance.	Yes
6. Is your department trained in the proper use of the equipment being requested?	Yes
7. Are you requesting funding to be trained for these item(s)? (Funding for requested training should be requested in the Equipment Additional Funding section).(Under the Action column select Update Additional Funding)	No
8. If you are not requesting training funds through this application, will you obtain training for this equipment through other sources?	No

Equipment

Equipment Details	
1. What equipment will your organization purchase with this grant?	CBRNE-related Equipment
* Please provide a detailed description of the item selected above.	Powered, air purifying respirator (PAPR)CBRN and Canisters - provide respiratory protection for use during CBRNE/IDLH atmospheres; CBRN blower; decon belt; airflow indicator tool; breathing tube; threaded canisters are one time use for PAPR respirators; to aid in the response to possible CBRNE incidents and provide life safety equipment to initial first responders for a regional response team
2. Number of units: (whole number only)	6
3. Cost per unit: (whole dollar amounts only; this amount should reflect any volume discounts, rebates, etc.)	$ 2568
4. Generally the equipment purchased under this grant program will:	
Buy equipment for the first time (never owned before)	
5. Will the equipment being requested bring the organization into voluntary compliance with a national standard, e.g. compliance with NFPA, OSHA, etc? In your Narrative Statement, please explain how this equipment will bring the organization into voluntary compliance.	Yes
6. Is your department trained in the proper use of the equipment being requested?	Yes
7. Are you requesting funding to be trained for these item(s)? (Funding for requested training should be requested in the Equipment Additional Funding section).(Under the Action column select Update Additional Funding)	No
8. If you are not requesting training funds through this application, will you obtain training for this equipment through other sources?	No

Equipment

Equipment Details	
1. What equipment will your organization purchase with this grant?	Vehicle Extrication Equipment
* Please provide a detailed description of the item selected above.	Airbags, low pressure lifting - Multiforce 25 basic airbag kit - 22" air bag, controller, inline relief valve, 16' hoses, 200 psi regulator; 3 layers of neoprene covered aramid fiber reinforcement; has the power to lift, move, or shift weights up to 89 tons per bag; we do not currently have low pressure bags to use to conduct high lift operations. Our jurisdiction as well as surrounding jurisdictions have high traffic of large transport vehicles
2. Number of units: (whole number only)	2
3. Cost per unit: (whole dollar amounts only; this amount should reflect any volume discounts, rebates, etc.)	$ 6500
4. Generally the equipment purchased under this grant program will:	
Buy equipment for the first time (never owned before)	
5. Will the equipment being requested bring the organization into voluntary compliance with a national standard, e.g. compliance with NFPA, OSHA, etc? In your Narrative Statement, please explain how this equipment will bring the organization into voluntary compliance.	Yes
6. Is your department trained in the proper use of the equipment being requested?	Yes
7. Are you requesting funding to be trained for these item(s)? (Funding for requested training should be requested in the Equipment Additional Funding section).(Under the Action column select Update Additional Funding)	No
8. If you are not requesting training funds through this application, will you obtain training for this equipment through other sources?	No

Equipment

Equipment Details	
1. What equipment will your organization purchase with this grant?	IDLH Monitoring Equipment
* Please provide a detailed description of the item selected above.	Gas Chromotagraph/Mass Spectrometer, portable chemical analyzer - Torion T9GC/MS, world's smallest portable GC/MS; easy to use; integrated system festures a low thermal mass capillary gas chromoatograph with high speed temperature programming and a miniaturized toroidal ion trap mass spectrometer with a mass range from 41 to 500 daltons; to provide the ability to identify unknown chemical substances while on-scene of a hazardous materials or CBRNE incidents
2. Number of units: (whole number only)	1
3. Cost per unit: (whole dollar amounts only; this amount should reflect any volume discounts, rebates, etc.)	$ 100000
4. Generally the equipment purchased under this grant program will:	
Buy equipment for the first time (never owned before)	
5. Will the equipment being requested bring the organization into voluntary compliance with a national standard, e.g. compliance with NFPA, OSHA, etc? In your Narrative Statement, please explain how this equipment will bring the organization into voluntary compliance.	Yes
6. Is your department trained in the proper use of the equipment being requested?	No
7. Are you requesting funding to be trained for these item(s)? (Funding for requested training should be requested in the Equipment Additional Funding section).(Under the Action column select Update Additional Funding)	No
8. If you are not requesting training funds through this application, will you obtain training for this equipment through other sources?	Yes

Equipment

Equipment Details	
1. What equipment will your organization purchase with this grant?	Decon, Clean-Up, Containment and Packaging Equipment
* Please provide a detailed description of the item selected above.	Transportable hot water heater - portable water heater to be used in conjunction with the portable decon shower;
2. Number of units: (whole number only)	1
3. Cost per unit: (whole dollar amounts only; this amount should reflect any volume discounts, rebates, etc.)	$ 289
4. Generally the equipment purchased under this grant program will:	
Buy equipment for the first time (never owned before)	
5. Will the equipment being requested bring the organization into voluntary compliance with a national standard, e.g. compliance with NFPA, OSHA, etc? In your Narrative Statement, please explain how this equipment will bring the organization into voluntary compliance.	No
6. Is your department trained in the proper use of the equipment being requested?	Yes
7. Are you requesting funding to be trained for these item(s)? (Funding for requested training should be requested in the Equipment Additional Funding section).(Under the Action column select Update Additional Funding)	No
8. If you are not requesting training funds through this application, will you obtain training for this equipment through other sources?	No

-

Equipment

Equipment Details	
1. What equipment will your organization purchase with this grant?	Ropes, Harnesses, Carabiners, Pulleys, etc.
* Please provide a detailed description of the item selected above.	Life safety rope - 1/2" 100% nylon life safety rope; 600' spool; to replace our current rope inventory which has reached or passed the recommended shelf life as suggested by the manufacturer to maintain a proper life safety factor
2. Number of units: (whole number only)	3
3. Cost per unit: (whole dollar amounts only; this amount should reflect any volume discounts, rebates, etc.)	$ 773
4. Generally the equipment purchased under this grant program will:	
Replace obsolete or damaged equipment that can no longer meet the applicable standards	
If you selected "Replace obsolete or damaged equipment" (from Q4) above, please specify the age of equipment in years.	10
5. Will the equipment being requested bring the organization into voluntary compliance with a national standard, e.g. compliance with NFPA, OSHA, etc? In your Narrative Statement, please explain how this equipment will bring the organization into voluntary compliance.	Yes
6. Is your department trained in the proper use of the equipment being requested?	Yes
7. Are you requesting funding to be trained for these item(s)? (Funding for requested training should be requested in the Equipment Additional Funding section).(Under the Action column select Update Additional Funding)	No
8. If you are not requesting training funds through this application, will you obtain training for this equipment through other sources?	No

-

Equipment

Equipment Details	
1. What equipment will your organization purchase with this grant?	CBRNE-related Equipment
* Please provide a detailed description of the item selected above.	Trace explosive detection swipe system - trace explosive kit can detect 9 families of explosive materials and their pre-cursors and has been tested against more than 20 specific explosives or pre-cursor materials; 5 kits in each box
2. Number of units: (whole number only)	2
3. Cost per unit: (whole dollar amounts only; this amount should reflect any volume discounts, rebates, etc.)	$ 200
4. Generally the equipment purchased under this grant program will:	
Buy equipment for the first time (never owned before)	
5. Will the equipment being requested bring the organization into voluntary compliance with a national standard, e.g. compliance with NFPA, OSHA, etc? In your Narrative Statement, please explain how this equipment will bring the organization into voluntary compliance.	Yes
6. Is your department trained in the proper use of the equipment being requested?	No
7. Are you requesting funding to be trained for these item(s)? (Funding for requested training should be requested in the Equipment Additional Funding section).(Under the Action column select Update Additional Funding)	No
8. If you are not requesting training funds through this application, will you obtain training for this equipment through other sources?	Yes

-

Equipment

Equipment Details	
1. What equipment will your organization purchase with this grant?	IDLH Monitoring Equipment
* Please provide a detailed description of the item selected above.	Surface and multi-meter thermometer - equipped with FLIR's exclusive lepton micro thermal sensor; camera lets you see the heat so you know exactly where to target the measurement spot; easily find hot and cold spots for instant troubleshooting and store images and data to include in reports; to aid in the identification of unknown substances and to help identify flow path of liquid chemical spills
2. Number of units: (whole number only)	2
3. Cost per unit: (whole dollar amounts only; this amount should reflect any volume discounts, rebates, etc.)	$ 349
4. Generally the equipment purchased under this grant program will:	
Buy equipment for the first time (never owned before)	
5. Will the equipment being requested bring the organization into voluntary compliance with a national standard, e.g. compliance with NFPA, OSHA, etc? In your Narrative Statement, please explain how this equipment will bring the organization into voluntary compliance.	Yes
6. Is your department trained in the proper use of the equipment being requested?	Yes
7. Are you requesting funding to be trained for these item(s)? (Funding for requested training should be requested in the Equipment Additional Funding section).(Under the Action column select Update Additional Funding)	No
8. If you are not requesting training funds through this application, will you obtain training for this equipment through other sources?	No

Firefighting Equipment - Narrative

* Section # 1 Project Description: In the space provided below, include clear and concise details regarding your organization's project's description and budget. This includes providing local statistics to justify the needs of your department and a detailed plan for how your department will implement the proposed project. Further, please describe what you are requesting funding for, including budget descriptions of the major budget items, i.e., personnel, equipment, contracts, etc. *4000 characters

The City of Deltona operates a local special operations team which includes all aspects of technical rescue and hazardous materials response. Our statistics over the last 3 years indicate that the Special Operations team has responded to more than 225 incidents requiring their specialized training. The calls include responses to explosions (10), hazardous materials responses (78), trench rescue (1), confined space rescue (2), and structural collapse (7). They have also responded to 130 calls for motor vehicle extrications where the use of airbags and cribbing were required for the successful retrieval of the vehicle passengers.

With these figures in mind, The Deltona Fire Department respectfully requests the following items from the Firefighting Equipment category. Most of the equipment requested is recommended equipment listed in the Authorized/Standardized Equipment List from RKB.org:

Ropes, Harnesses, Carabiners, Pulleys, etc. - $2,319, for the purchase of new life safety rope. This purchase will bring us into compliance with NFPA 1983, Standard on Life Safety Rope and Equipment for Emergency Services.

IDLH Monitoring Equipment - $140,133, for the purchase of a wireless Hazmat weather system; a photo ionization detector (PID) point VOC; a gas chromatograph/mass spectrometer; and a surface and multimeter thermometer. This purchase will bring us into voluntary compliance with NFPA 471, Recommended Practice for Responding to Hazardous Materials Incidents.

Responder Rehab Equipment - $1,130, for the purchase of a heat stress monitor. This purchase will bring us into voluntary compliance with NFPA 471, Recommended Practice for Responding to Hazardous Materials Incidents.

Vehicle Extrication Equipment - $13,000, for the purchase of an airbag low pressure lifting set. This purchase will bring us into voluntary compliance with NFPA 1670, Standard on Operations and Training for Technical Search and Rescue Incidents.

Basic Hazmat Response Equipment - $20,769, for the purchase of a confined space communications equipment; a grounding and bonding kit and the copper grounding rods; and a Lid Loc dome clamp. This purchase will bring us into voluntary compliance with NFPA 471, Recommended Practice for Responding to Hazardous Materials Incidents.

Decon, Clean-up, Containment, and Packaging Equipment - $62,151 for the purchase of a liquid decontamination containment device; decontamination corridor/12 ft. IRT conveyor system and an IRT high capacity decon system; a portable decontamination shower and transportable hot water heater. This purchase will bring us into voluntary compliance with NFPA 471, Recommended Practice for Responding to Hazardous Materials Incidents.
Monitoring and Sampling Devices - $960, for the purchase of a leak detector.

CBRNE-related Equipment - $29,547, for the purchase of a Delsar life detector and search camera; 6 sets of powered air purifying respirator (PAPR) and canisters; and a trace explosive swipe system. This purchase will bring us into voluntary compliance with NFPA 1500, Standard on Fire Department Occupational Safety and Health Program, and NFPA 1670, Standard on Operations and Training for Technical Search and Rescue Incidents.

Since this request is for equipment, implementation will be fairly simple, but time consuming. Our first order of business will be to put all of the items out for bid according to the City of Deltona Purchasing Policies and Procedures. Our bid process generally takes about six to eight weeks from the publishing of the bid, to the bid opening, and then bid tabulation. The successful bidder will then be notified and a purchasing requisition will be entered into our system for a purchase order to be issued. Once the equipment has been received, arrangements will be made for the appropriate training to be demonstrated before the equipment can be put into service.

---

* Section # 2 Cost/Benefit: In the space provided below please explain, as clearly as possible, what will be the benefits your department or your community will realize if the project described is funded (i.e. anticipated savings and/or efficiencies)? Is there a high benefit for the cost incurred? Are the costs reasonable? Provide justification for the budget items relating to the cost of the requested items. *4000 characters

---

We receive ad valorem funding through the Municipal General Fund of the City of Deltona. Even though Deltona is the largest city in Volusia County, we do not have a very large commercial/industrial base. Nearly all of our taxes come from residential properties. Our budget this year is approximately $10.3 million. Our personnel budget for seventy-seven personnel is currently 82% of our budget at $8.4 million. Our operating costs total another 12% and capital equipment is the final 9%. With the continued increase in costs ranging from personnel to operating costs, there is not much left for projects. The City is able to put money aside every year to contribute to our building fund, but we are expected to purchase our equipment from our budget.

As with many areas in the United States, the City of Deltona was hit hard by the recession in 2007-2008. Housing prices dropped 30-40% in most areas and nearly 30% of the mortgages in the city were foreclosed on. As a result, the ad valorem taxes were also heavily hit, with a 30% drop in tax revenue in that first year. Unemployment was also a factor as many of the citizens in Deltona were employed in the construction and service/tourist-related industries. Consequently, an austerity measure was implemented by the administration to counteract this huge drop in funding. Things have gotten better, but we are still recovering from this financial devastation.

Our current budget allows for $12,000 for Special Operation equipment, only 4% of the amount requested in this grant proposal. As you can imagine, the recession, and our resulting financial crisis was out of our control. Special Operations equipment was eliminated from our budgets as a "luxury", and we therefore, "made do" with what we already had and only replaced what we absolutely had to, due to breakage. This grant will give us the opportunity to replace existing out of date equipment and expand our mission with new equipment to serve the citizens of Deltona and to the regional southwest Volusia County area. The City is fully supportive of our efforts and have pledged the 10% match if we are successful in receiving grant funds. The dollar amounts reflected above are ¿middle of the road¿ pricing as all of the equipment requested will have to be submitted for bid per the City of Deltona Purchasing Policies and Procedures.

Funding and implementation of this request will have a positive effect on our firefighters, on the Deltona Fire Department, on the community that we serve, and will be beneficial to our neighboring jurisdictions. It will increase our capabilities and our abilities to mitigate hazardous conditions and IDLH environments. The major benefit to our department and community with the purchase of this new equipment, will be the elevation of the team from Hazmat Awareness level to Hazmat Technician level.

---

* Section # 3 Statement of Effect: How would this award impact the daily operations of your department? How would this award impact your department's ability to protect lives and property in your community? *4000 characters

---

The preservation of life and protection of property is a fundamental responsibility of all levels of

government. Conditions of accidental, natural, disorder or disruptive disaster, and enemy attack are all inherent to the age in which we live. A required function of government is to reduce or prevent any possible impact of these conditions by progressive emergency planning, education and advance preparation. Deltona must be prepared for the possibility that a disaster will strike this area.

The City of Deltona was incorporated in 1995, and in the 2000 census, we became the largest city in Volusia County. The Deltona Fire Department protects the city and its more than 86,000 residents and covering 46 square miles and nearly 100 lakes. We also have mutual and automatic aid agreements with the surrounding areas, which include Interstate 4, CSX, Amtrak, and SunRail, Lake Monroe, 2 power plants, 2 hospitals, a stand-alone ER and the St. Johns River. The fire department operates from 5 stations and has 5 front line engines, 1 aerial truck, 3 brush trucks, a Special Operations Squad, and 1 rescue unit. In 2004, our department applied for and were approved as a Type II Technical Rescue Team, as part of the Florida Urban Search and Rescue System.

Our Special Operations Team¿s primary mission is to the community that we serve, and to support the surrounding communities through mutual and automatic aid. We will respond promptly and effectively to each situation in a manner that will minimize injury, loss of life, and property damage; provide appropriate assistance to victims, displaced persons and evacuees, and; expedite actions necessary to restore conditions to normal. During recovery, the team would also provide structural damage assessment, and the assistance to restore critical lifelines.

We are one of two Hazmat Operational and Technical Level teams in the County. The Volusia County team has been selected as a responder for hazardous incidents anywhere in Central Florida. If they were to respond to an incident, it would leave Volusia County unprotected. Our Special Operations team would be a backup in Volusia County, in the event of a large scale incident.

Interstate 4 comprises the entire western boundary of the City of Deltona. The largest hazardous materials incident in Volusia County history was on I4 in Deltona in 1994. A tanker truck carrying a fluorosilicic acid sprung a leak and dumped the chemical on I4. This was a major accident, but it could just as easily been a terrorist related incident. The St. Johns River Bridge on I4 is the major route between Daytona Beach, Orlando and Tampa. If an incident, terrorist or otherwise, happened on the bridge, the Deltona Team would be the first on scene due to our proximity.

The addition of the requested equipment will encourage expanded regional collaboration, and strengthen our collaboration capabilities. The usage of the equipment as part of the Type II Technical Rescue Team and for mutual and automatic aid agreements will empower the Special Operations Team by providing the team with their own equipment. As stated above, since the team is the closest TRT team in the area, it will be our responsibility to be the first line of protection and response for major incidents on the very infrastructure of Volusia County. The Team may also be called to assist operations in the eastern half of Volusia County which includes the City of Daytona Beach. Missions on the east side of the county may include sites such as the Daytona Beach International Airport, the Daytona International Motor Speedway, and the Ocean Center Convention Center.

We are grateful for your support and your time. We would like to express our appreciation for the opportunities that this grant could provide.

Personal Protective Equipment

Personal Protective Equipment Details	
1. Select the PPE that you propose to acquire (select one):	Extrication Clothing/Rescue Clothing
Please provide a detailed description of the item selected above.	Rescue and Recovery protective ensemble for technical rescue incidents, Dual certified to both NFPA standards 1999 and 1951, this USAR gear features a Crosstech® S/R Fabric liner sewn in to the garments. Crosstech® S/R Fabric is a durable, 2-layer, aramid-based laminate that provides a barrier against all of the liquid and chemical hazards present at the scene, in addition to being flame resistant and abrasion resistant. The outer shell is a Kevlar/PBO blend specifically engineered for USAR.
2. Number of units: (whole number only)	40
3. Cost per unit: (whole dollar amounts only; this amount should reflect any volume discounts, rebates, etc.)	$1800
4. Please provide your amount for the appropriate question below: • For turnout requests, what number of your on-duty active members ***currently have*** PPE that meets applicable NFPA and OSHA standards? • If you are requesting new SCBA, how many of your seated riding positions ***currently have*** compliant SCBA assigned to it? • If you are asking for specialized PPE (e.g., Haz-Mat), how many applicable members ***currently have*** specialized PPE that meets established standards?	0
5. What is the purpose of this request?	To buy PPE/SCBA for the first time (never owned before)
6. Is your organization facing a new risk?	No
What are the specific ages of the type of PPE you are requesting? **Please assure that you've accounted for ALL gear for ALL members declared in Department Characteristics - not just the gear you wish to replace. If you have 30 members then account for 30 sets**	N/A

Age (in Years)	Current Inventory	Being Replaced
Less than 1		
1		
2		

of PPE.

3		
4		
5		
6		
7		
8		
9		
10		
11		
12		
13		
14		
15		
16		
17		
18		
19		
20		
21		
22		
23		
24		
25 or more		
Number of members without PPE		

If you have indicated you are requesting SCBA or Cylinders in Question 1, to which edition(s) of the NFPA 1981 standard are your SCBA or Cylinders compliant? If not requesting SCBA/Cylinders, please select "N/A" and continue on to the next question. **Please account for ALL SCBA/Cylinders currently in your department's inventory - not just the SCBA/Cylinders you wish to replace. If you have damaged or inoperable SCBA/Cylinders/Face Pieces please list them in the "Obsolete/Damaged" section.**

N/A

Year	Current Inventory		Being Replaced	
	SCBA	Cylinders	SCBA	Cylinders
2013 Edition				
2007 Edition				
2002 Edition and older				
Obsolete/damaged				

7. Is your department trained in the proper use of the PPE/SCBA being requested?

Yes

8. Are you requesting funding for training for this PPE/SCBA?	No		
9. If you are not requesting training funds through this application, will you obtain training for this PPE/SCBA through other sources?	No		

Firefighting PPE - Narrative

* Section # 1 Project Description: In the space provided below, include clear and concise details regarding your organization's project's description and budget. This includes providing local statistics to justify the needs of your department and a detailed plan for how your department will implement the proposed project. Further, please describe what you are requesting funding for, including budget descriptions of the major budget items, i.e., personnel, equipment, contracts, etc. *4000 characters

The City of Deltona operates a local special operations team which includes all aspects of technical rescue and hazardous materials response. We are currently in negotiations with the City of Orange City and City of Deland to establish a regional special operations team. This regional team would respond to all special hazard operations covering all of southwest Volusia County. This area is adjacent to the St. Johns River and Lake Monroe, and responds to calls for service to CSX railways, SunRail (State of Florida commuter train service), Amtrak, State Road 415, and Interstate 4. Along with being a regional response team, Deltona's special operations team has been designated as Florida Task Force LTRT 532, a Type IV Light Technical Rescue Team as part of the Florida Urban Search and Rescue System.

Our statistics over the last 3 years indicate that the Special Operations team has responded to more than 225 incidents requiring their specialized training. The calls include responses to explosions (10), hazardous materials responses (78), trench rescue (1), confined space rescue (2), and structural collapse (7). They have also responded to 130 calls for motor vehicle extrications where the use of airbags and cribbing were required for the successful retrieval of the vehicle passengers.

With these figures in mind, The Deltona Fire Department respectfully requests the following items from the Personal Protective Equipment category. The personal protective equipment requested is recommended equipment listed in the Authorized/Standardized Equipment List from RKB.org:

Rescue and Recovery Protective Ensemble - $72,000, which includes 40 sets of NFPA 1951 and 1999 compliant pants, shirt, and boots to provide a better level of protection for responders during technical rescue missions for regional responses. This gear provides the durability we will need for a search and rescue scene, without compromising comfort. Dual certified to both NFPA standards 1999 and 1951, this USAR gear features a Crosstech® S/R Fabric liner sewn in to the garments. Crosstech® S/R Fabric is a durable, 2-layer, aramid-based laminate that provides a barrier against all of the liquid and chemical hazards present at the scene, in addition to being flame resistant and abrasion resistant. The outer shell is a Kevlar/PBO blend specifically engineered for USAR.

Since this request is for equipment, implementation will be fairly simple, but time consuming. Our first order of business will be to the items out for quote according to the City of Deltona Purchasing Policies and Procedures. The successful vendor will then be notified, a fitting will take place to assure the proper fit for all of our firefighters and a purchasing requisition will be entered into our system for a purchase order to be issued. Once the equipment has been received, the personal protective equipment will be distributed to each of the firefighters.

* Section # 2 Cost/Benefit: In the space provided below please explain, as clearly as possible, what will be the benefits your department or your community will realize if the project described is funded (i.e. anticipated savings and/or efficiencies)? Is there a high benefit for the cost incurred? Are the costs reasonable? Provide justification for the budget items relating to the cost of the requested items. *4000 characters

We receive ad valorem funding through the Municipal General Fund of the City of Deltona. Even though Deltona is the largest city in Volusia County, we do not have a very large commercial/industrial base. Nearly all of our taxes come from residential properties. Our budget this year is approximately $10.3 million. Our personnel budget for seventy-seven personnel is currently 82% of our budget at $8.4 million. Our operating costs total another 12% and capital equipment is the final 9%. With the continued increase in costs ranging from personnel to operating costs, there is not much left for projects. The City is able to put money aside every year to contribute to our building fund, but we are expected to purchase our equipment from our budget.

As with many areas in the United States, the City of Deltona was hit hard by the recession in 2007-2008. Housing prices dropped 30-40% in most areas and nearly 30% of the mortgages in the city were foreclosed on. As a result, the ad valorem taxes were also heavily hit, with a 30% drop in tax revenue in that first year. Unemployment was also a factor as many of the citizens in Deltona were employed in the construction and service/tourist-related industries. Consequently, an austerity measure was implemented by the administration to counteract this huge drop in funding. Things have gotten better, but we are still recovering from this financial devastation.

Our current budget allows for $12,000 for Special Operation equipment, only 4% of the amount requested in this grant proposal. As you can imagine, the recession, and our resulting financial crisis was out of our control. Special Operations equipment was eliminated from our budgets as a "luxury", and we therefore, "made do" with what we already had and only replaced what we absolutely had to, due to breakage. This grant will give us the opportunity expand our mission with new personal protective equipment to serve the citizens of Deltona and to the regional southwest Volusia County area. The City is fully supportive of our efforts and have pledged the 10% match if we are successful in receiving grant funds. The dollar amount reflected above is ¿middle of the road¿ pricing as the equipment requested will have to be submitted for a quote per the City of Deltona Purchasing Policies and Procedures.

Funding and implementation of this request will have a positive effect on our firefighters, on the Deltona Fire Department, on the community that we serve, and will be beneficial to our neighboring jurisdictions. It will increase our capabilities and our abilities to mitigate hazardous conditions and IDLH environments. This type of personal protective equipment has never been available to us prior to the application for this grant. It has been, like most of the equipment previously requested, a luxury, and not afforded a place in our budget. The major benefit to our department will be the added security of providing our firefighters with additional layers of protection to contribute to their health, safety and well-being.

* Section # 3 Statement of Effect: How would this award impact the daily operations of your department? How would this award impact your department's ability to protect lives and property in your community? *4000 characters

The preservation of life and protection of property is a fundamental responsibility of all levels of government. Conditions of accidental, natural, disorder or disruptive disaster, and enemy attack are all inherent to the age in which we live. A required function of government is to reduce or prevent any possible impact of these conditions by progressive emergency planning, education and advance preparation. Deltona must be prepared for the possibility that a disaster will strike this area.

The City of Deltona was incorporated in 1995, and in the 2000 census, we became the largest city in Volusia County. The Deltona Fire Department protects the city and its more than 86,000 residents and

covering 46 square miles and nearly 100 lakes. We also have mutual and automatic aid agreements with the surrounding areas, which include Interstate 4, CSX, Amtrak, and SunRail, Lake Monroe, 2 power plants, 2 hospitals, a stand-alone ER and the St. Johns River. The fire department operates from 5 stations and has 5 front line engines, 1 aerial truck, 3 brush trucks, a Special Operations Squad, and 1 rescue unit. In 2004, our department applied for and were approved as a Type II Technical Rescue Team, as part of the Florida Urban Search and Rescue System.

Our Special Operations Team¿s primary mission is to the community that we serve, and to support the surrounding communities through mutual and automatic aid. We will respond promptly and effectively to each situation in a manner that will minimize injury, loss of life, and property damage; provide appropriate assistance to victims, displaced persons and evacuees, and; expedite actions necessary to restore conditions to normal. During recovery, the team would also provide structural damage assessment, and the assistance to restore critical lifelines.

We are one of two Hazmat Operational and Technical Level teams in the County. The Volusia County team has been selected as a responder for hazardous incidents anywhere in Central Florida. If they were to respond to an incident, it would leave Volusia County unprotected. Our Special Operations team would be a backup in Volusia County, in the event of a large scale incident.

Interstate 4 comprises the entire western boundary of the City of Deltona. The largest hazardous materials incident in Volusia County history was on I4 in Deltona in 1994. A tanker truck carrying a fluorosilicic acid sprung a leak and dumped the chemical on I4. This was a major accident, but it could just as easily been a terrorist related incident. The St. Johns River Bridge on I4 is the major route between Daytona Beach, Orlando and Tampa. If an incident, terrorist or otherwise, happened on the bridge, the Deltona Team would be the first on scene due to our proximity.

The addition of the requested equipment will encourage expanded regional collaboration, and strengthen our collaboration capabilities. The usage of the personal protective equipment as part of the Type II Technical Rescue Team and for mutual and automatic aid agreements will empower the Special Operations Team by providing the team with their own equipment. As stated above, since the team is the closest TRT team in the area, it will be our responsibility to be the first line of protection and response for major incidents on the very infrastructure of Volusia County. The Team may also be called to assist operations in the eastern half of Volusia County which includes the City of Daytona Beach. Missions on the east side of the county may include sites such as the Daytona Beach International Airport, the Daytona International Motor Speedway, and the Ocean Center Convention Center.

We are grateful for your support and your time. We would like to express our appreciation for the opportunities that this grant could provide.

Training Program

Training Details	
1. What type of training are you requesting?	
Technical Rescue/Urban Search and Rescue - Technician level (NFPA 1670/1006)	
Please provide a detailed description of the Training Program you selected.	Structural Collapse Technician course that meets NFPA 1670/1006 based on the outline of the FEMA USAR course taught to the national task forces; Modules include hazard recognitions; equipment use; and techniques necessary to operate safely and effectively at structural collapse incidents involving the collapse or failure of concrete tilt-up, reinforced concrete, and steel construction
2. Generally, this program can best be categorized as:	
Training that is evaluated/tested using a national, state, or local standard	
3. How many personnel will be trained by this program?	5
4. Generally, the training program provided under this grant:	
Will bring your department into compliance with applicable NFPA or other standards, please specify:	Explanation: This course meets NFPA 1670/1006 standards
5. Will this training enhance your ability to perform Mutual Aid?	Yes
If you answered Yes to the question above, please explain.	This course will allow us to bring all members of the TRT 532 task force team up to the required technician level
6. Will this training include members from other fire departments and/or nonaffiliated EMS organizations?	No
7. Will this training be:	Instructor-led

udget Item - Technical Rescue/Urban Search and Rescue - Technician level (NFPA 1670/1006)

Item **(select one)**	Specialized
Please provide a detailed description of he item selected above.	Structural Collapse Technician Course NFPA 1670/1006,includes tuition, classroom supplies, and travel expenses for 5 personnel to acquire the technician level certification needed to increase response abilities for our regional technical rescue response team. This will allow the personnel to travel to the Broward Fire Academy in Davie, FL to participate in the 5 day course.

Select Object Class	Other
f you selected other above, please specify	Tuition
Number of units: (whole number only)	5
Cost per unit: (whole dollar amounts only; this mount should reflect any volume discounts, rebates, tc.)	$ 1500

Budget Item - Technical Rescue/Urban Search and Rescue - Technician level (NFPA 1670/1006)

* Item **(select one)**	Specialized
* Please provide a detailed description of the item selected above.	Structural Collapse Technician Course, includes travel accommodations for 5 personnel to attend the 5 day class at the Broward Fire Academy in Davie, FL
* Select Object Class	Travel
f you selected other above, please specify	
* Number of units: (whole number only)	5
* Cost per unit: (whole dollar amounts only; this amount should reflect any volume discounts, rebates, etc.)	$ 750

Training Program

Training Details	
1. What type of training are you requesting?	
Haz-Mat Technician/Specialist level (NFPA 472)	
Please provide a detailed description of the Training Program you selected.	Hazmat Technician course - class to be provided by the Florida State Fire College and/or IAFF/IAFC instructors - the purpose of these guidelines is to specify minimum competencies required for those who respond to hazardous materials/WMD incidents and necessary for a risk based response to these incidents
2. Generally, this program can best be categorized as:	
Training that is evaluated/tested using a national, state, or local standard	
3. How many personnel will be trained by this program?	6
4. Generally, the training program provided under this grant:	
Will bring your department into compliance with applicable NFPA or other standards, please specify:	Explanation: This course is compliant with NFPA 472 standards and OSHA 20CFR1910.120
5. Will this training enhance your ability to perform Mutual Aid?	Yes

If you answered Yes to the question above, please explain.	This course is required for all members of the TRT 532 task force team
6. Will this training include members from other fire departments and/or nonaffiliated EMS organizations?	Yes
7. Will this training be:	Instructor-led

Budget Item - Haz-Mat Technician/Specialist level (NFPA 472)

* Item **(select one)**	Haz-Mat
* Please provide a detailed description of the item selected above.	Hazmat Technician Course NFPA 472 OSHA 29CFR1910.120, includes tuition for 15 personnel to acquire the technician level certification needed to provide adequate response personnel for our regional hazmat response team. This will allow the department to bring certified instructors to our department to provide in-house instruction.
* Select Object Class	Contractual
If you selected other above, please specify	
* Number of units: (whole number only)	15
* Cost per unit: (whole dollar amounts only; this amount should reflect any volume discounts, rebates, etc.)	$ 700

Training Program

Training Details	
1. What type of training are you requesting?	
Haz-Mat Technician/Specialist level (NFPA 472)	
Please provide a detailed description of the Training Program you selected.	DOT 406 Training prop - unique cargo tank model developed for the sole purpose of training firefighters in the construction features and operational features of the DOT 406 cargo tank. Meets Technician level recurrent training requirements by OSHA and NFPA 472
2. Generally, this program can best be categorized as:	
Training that is evaluated/tested using a national, state, or local standard	
3. How many personnel will be trained by this program?	30
4. Generally, the training program provided under this grant:	
Will bring your department into compliance with applicable NFPA or other standards, please specify:	Explanation: This DOT 406 training prop meets Technician level training requirements and meets OSHA and NFPA 472

5. Will this training enhance your ability to perform Mutual Aid?	Yes
If you answered Yes to the question above, please explain.	This training prop will fulfill Technician level recurrent training requirements for TRT 532 task force team
6. Will this training include members from other fire departments and/or nonaffiliated EMS organizations?	Yes
7. Will this training be:	Instructor-led

Budget Item - Haz-Mat Technician/Specialist level (NFPA 472)

* Item **(select one)**	Non-Construction
* Please provide a detailed description of the item selected above.	DOT 406 training prop,was developed for the sole purpose of training firefighters and emergency responders in the construction features and operational features of the DOT-406 Cargo Tank.
* Select Object Class	Equipment
If you selected other above, please specify	
* Number of units: (whole number only)	1
* Cost per unit: (whole dollar amounts only; this amount should reflect any volume discounts, rebates, etc.)	$ 28050

Training Program

Training Details	
1. What type of training are you requesting?	
Haz-Mat Technician/Specialist level (NFPA 472)	
Please provide a detailed description of the Training Program you selected.	MC 306 and 406 dome leak simulator - 4 station simulator specifically designed to simulate leaking 306 or 406 dome lids found on gasoline cargo tanks; This unit may be used to satisfy training requirements for NFPA 472 concerning leaking dome lids and relief devices.
2. Generally, this program can best be categorized as:	
Training that is evaluated/tested using a national, state, or local standard	
3. How many personnel will be trained by this program?	30
4. Generally, the training program provided under this grant:	
Will bring your department into compliance with applicable	Explanation:

NFPA or other standards, please specify:	This MC306 and 406 dome leak simulator will fulfill the training requirements cited in NFPA 472
5. Will this training enhance your ability to perform Mutual Aid?	Yes
If you answered Yes to the question above, please explain.	This training will satisfy requirements for TRT 532 task force team
6. Will this training include members from other fire departments and/or nonaffiliated EMS organizations?	Yes
7. Will this training be:	Instructor-led

Budget Item - Haz-Mat Technician/Specialist level (NFPA 472)

* Item **(select one)**	Non-Construction
* Please provide a detailed description of the item selected above.	MC 306 and 406 dome leak simulator was developed to simulate leaking 306 or 406 dome lids found on gasoline cargo tanks. Once pressurize with water each vent will open and begin to leak. Hazmat Team members can then move in and practice the application of dome clamps to contain the leaks.
* Select Object Class	Equipment
If you selected other above, please specify	
* Number of units: (whole number only)	1
* Cost per unit: (whole dollar amounts only; this amount should reflect any volume discounts, rebates, etc.)	$ 5499

-

Firefighting Training - Narrative

-

* Section # 1 Project Description: In the space provided below, include clear and concise details regarding your organization's project's description and budget. This includes providing local statistics to justify the needs of your department and a detailed plan for how your department will implement the proposed project. Further, please describe what you are requesting funding for, including budget descriptions of the major budget items, i.e., personnel, equipment, contracts, etc. *4000 characters

The City of Deltona operates a local special operations team which includes all aspects of technical rescue and hazardous materials response. We are currently in negotiations with the City of Orange City and City of Deland to establish a regional special operations team. This regional team would respond to all special hazard operations covering all of southwest Volusia County. This area is adjacent to the St. Johns River and Lake Monroe, and responds to calls for service to CSX railways, SunRail (State of Florida commuter train service), Amtrak, State Road 415, and Interstate 4. Along with being a regional response team, Deltona's special operations team has been designated as Florida Task Force LTRT 532, a Type IV Light Technical Rescue Team as part of the Florida Urban Search and Rescue System.

Our statistics over the last 3 years indicate that the Special Operations team has responded to more than 225 incidents requiring their specialized training. The calls include responses to explosions (10), hazardous materials responses (78), trench rescue (1), confined space rescue (2), and structural collapse (7). They have also responded to 130 calls for motor vehicle extrications where the use of airbags and cribbing were required for the successful retrieval of the vehicle passengers.

With these figures in mind, The Deltona Fire Department respectfully requests the following items from the Training category:

Structural Collapse Technician Course - $11,250. This course will assure that the team will be in compliance with NFPA 1670/1006, Standard on Operations and Training for Technical Search and Rescue Incidents/Standard for Technical Rescuer Professional Qualifications.

Hazmat Technician Course - $10,500. This course will assure that the team will be in compliance with NFPA 472, Standard for Competence of Responders to Hazardous Materials/Weapons of Mass Destruction Incidents.

DOT 406 Training Prop - $28,050. The Hazardous Materials Responder at the Technician Level is required to demonstrate the ability to apply clamping devices as required by: OSHA HMSPEC-F, NFPA 472 10-4.1.1 (d) & (f)., HMEP Technician with a Cargo Tank Specialty Recommended Training, CARGO-5.1. This prop will allow us to provide continuous refresher training and increase safety for hazmat technicians in the response to tank truck incidents.

MC 306 and 406 dome leak simulator - $5,499. This unit may be used to satisfy training requirements cited by NFPA 472 (10-4.1.1) concerning leaking dome lids & relief devices. This prop will allow us to provide continuous refresher training and increase safety for hazmat technicians in the response to tank truck incidents.

Since this request is for training and training props, implementation will be fairly simple, but time consuming. Our first order of business will be to put the props out for bid according to the City of Deltona Purchasing Policies and Procedures. Our bid process generally takes about six to eight weeks from the publishing of the bid, to the bid opening, and then bid tabulation. The successful bidder will then be notified and a purchasing requisition will be entered into our system for a purchase order to be issued. Once the equipment has been received, arrangements will be made for the appropriate training to be demonstrated before the equipment can be put into service. The training is a little different as training doesn¿t have to go out to bid. We will have to find out dates that Broward Fire Academy is holding the class and then make arrangements for our people to participate. The Hazmat class will need to be worked into our training schedule as it is a 4 week course and then hire the instructor(s) to teach the class.

---

* Section # 2 Cost/Benefit: In the space provided below please explain, as clearly as possible, what will be the benefits your department or your community will realize if the project described is funded (i.e. anticipated savings and/or efficiencies)? Is there a high benefit for the cost incurred? Are the costs reasonable? Provide justification for the budget items relating to the cost of the requested items. *4000 characters

---

We receive ad valorem funding through the Municipal General Fund of the City of Deltona. Even though Deltona is the largest city in Volusia County, we do not have a very large commercial/industrial base. Nearly all of our taxes come from residential properties. Our budget this year is approximately $10.3 million. Our personnel budget for seventy-seven personnel is currently 82% of our budget at $8.4 million. Our operating costs total another 12% and capital equipment is the final 9%. With the continued increase in costs ranging from personnel to operating costs, there is not much left for projects. The City is able to put money aside every year to contribute to our building fund, but we are expected to purchase our equipment from our budget.

As with many areas in the United States, the City of Deltona was hit hard by the recession in 2007-2008. Housing prices dropped 30-40% in most areas and nearly 30% of the mortgages in the city were foreclosed on. As a result, the

ad valorem taxes were also heavily hit, with a 30% drop in tax revenue in that first year. Unemployment was also a factor as many of the citizens in Deltona were employed in the construction and service/tourist-related industries. Consequently, an austerity measure was implemented by the administration to counteract this huge drop in funding. Things have gotten better, but we are still recovering from this financial devastation.

Our current budget allows for $12,000 for Special Operation equipment, only 4% of the amount requested in this grant proposal. As you can imagine, the recession, and our resulting financial crisis was out of our control. Special Operations equipment was eliminated from our budgets as a "luxury", and we therefore, "made do" with what we already had and only replaced what we absolutely had to, due to breakage. This grant will give us the opportunity expand our mission with these classes to elevate the expertise of our firefighters to Technician level to serve the citizens of Deltona and to the regional southwest Volusia County area. The City is fully supportive of our efforts and have pledged the 10% match if we are successful in receiving grant funds. The dollar amount reflected above is indicative of the costs for training in Florida. Since the props are proprietary, those costs are fairly accurate also.

Funding and implementation of this request will have a positive effect on our firefighters, on the Deltona Fire Department, on the community that we serve, and will be beneficial to our neighboring jurisdictions. It will increase our capabilities and our abilities to mitigate hazardous conditions and IDLH environments. These classes will assist us in our quest to elevate our team from Awareness level to Technician level. Training funds are available but not to the extent that these grant funds would afford us. The training props will also allow us continuous training opportunities that are not available to us at this time.

---

* Section # 3 Statement of Effect: How would this award impact the daily operations of your department? How would this award impact your department's ability to protect lives and property in your community? *4000 characters

---

The preservation of life and protection of property is a fundamental responsibility of all levels of government. Conditions of accidental, natural, disorder or disruptive disaster, and enemy attack are all inherent to the age in which we live. A required function of government is to reduce or prevent any possible impact of these conditions by progressive emergency planning, education and advance preparation. Deltona must be prepared for the possibility that a disaster will strike this area.

The City of Deltona was incorporated in 1995, and in the 2000 census, we became the largest city in Volusia County. The Deltona Fire Department protects the city and its more than 86,000 residents and covering 46 square miles and nearly 100 lakes. We also have mutual and automatic aid agreements with the surrounding areas, which include Interstate 4, CSX, Amtrak, and SunRail, Lake Monroe, 2 power plants, 2 hospitals, a stand-alone ER and the St. Johns River. The fire department operates from 5 stations and has 5 front line engines, 1 aerial truck, 3 brush trucks, a Special Operations Squad, and 1 rescue unit. In 2004, our department applied for and were approved as a Type II Technical Rescue Team, as part of the Florida Urban Search and Rescue System.

Our Special Operations Team's primary mission is to the community that we serve, and to support the surrounding communities through mutual and automatic aid. We will respond promptly and effectively to each situation in a manner that will minimize injury, loss of life, and property damage; provide appropriate assistance to victims, displaced persons and evacuees, and; expedite actions necessary to restore conditions to normal. During recovery, the team would also provide structural damage assessment, and the assistance to restore critical lifelines.

We are one of two Hazmat Operational and Technical Level teams in the County. The Volusia County team has been selected as a responder for hazardous incidents anywhere in Central Florida. If they were to respond to an incident, it would leave Volusia County unprotected. Our Special Operations team would be a backup in Volusia County, in the event of a large scale incident.

Interstate 4 comprises the entire western boundary of the City of Deltona. The largest hazardous materials incident in Volusia County history was on I4 in Deltona in 1994. A tanker truck carrying a fluorosilicic acid sprung a leak and dumped the chemical on I4. This was a major accident, but it could just as easily been a terrorist related incident. The

St. Johns River Bridge on I4 is the major route between Daytona Beach, Orlando and Tampa. If an incident, terrorist or otherwise, happened on the bridge, the Deltona Team would be the first on scene due to our proximity.

With the potential of this valuable training, all personnel on the team will be elevated to the Technician level of all disciplines practiced by our team. Also with the addition of the new props, our personnel will have the opportunity to be able to train continuously as advocated in NFPA 472. The addition of the requested training will encourage expanded regional collaboration, and strengthen our collaboration capabilities. As stated above, since the team is the closest TRT team in the area, it will be our responsibility to be the first line of protection and response for major incidents on the very infrastructure of Volusia County. The Team may also be called to assist operations in the eastern half of Volusia County which includes the City of Daytona Beach. Missions on the east side of the county may include sites such as the Daytona Beach International Airport, the Daytona International Motor Speedway, and the Ocean Center Convention Center.

We are grateful for your support and your time. We would like to express our appreciation for the opportunities that this grant could provide.

Budget

Budget Object Class Budget Object Class	
a. Personnel	$ 0
b. Fringe Benefits	$ 0
c. Travel	$ 3,750
d. Equipment	$ 375,558
e. Supplies	$ 0
f. Contractual	$ 10,500
g. Construction	$ 0
h. Other	$ 7,500
i. Indirect Charges	$ 0
j. State Taxes	$ 0
Federal and Applicant Share	
Federal Share	$ 361,190
Applicant Share	$ 36,118
Applicant Share of Award (%)	10
*Non-Federal Resources Non-Federal Resources *(The combined Non-Federal Resources must equal the Applicant Share of $ 36,118)*	
a. Applicant	$ 36,118
b. State	$ 0
c. Local	$ 0
d. Other Sources	$ 0
If you entered a value in Other Sources other than zero (0), include your explanation below. You can use this space to provide information on the project, cost share match, or if you have an indirect cost agreement with a federal agency.	
Total Budget	**$ 397,308**

Narrative Statement

For 2011 and on, the Narrative section of the AFG application has been modified. You will enter individual narratives for the Project Description, Cost-Benefit, Statement of Effect, and Additional Information in the Request Details section for each Activity for which you are requesting funds. Please return to the Request Details section for further instructions. You will address the Financial Need in Applicant Characteristics II section of the application. We recommend that you type each response in a Word Document outside of the grant application and then copy and paste it into the spaces provided within the application.

Assurances and Certifications

FEMA Form SF 424B

You must read and sign these assurances. These documents contain the Federal requirements attached to all Federal grants including the right of the Federal government to review the grant activity. You should read over the documents to become aware of the requirements. The Assurances and Certifications must be read, signed, and submitted as a part of the application.

Note: Fields marked with an * are required.

O.M.B Control Number 4040-0007

Assurances Non-Construction Programs
Note: Certain of these assurances may not be applicable to your project or program. If you have any questions, please contact the awarding agency. Further, certain Federal awarding agencies may require applicants to certify to additional assurances. If such is the case, you will be notified.
As the duly authorized representative of the applicant I certify that the applicant: 1. Has the legal authority to apply for Federal assistance and the institutional, managerial and financial capability (including funds sufficient to pay the non-Federal share of project costs) to ensure proper planning, management and completion of the project described in this application. 2. Will give the awarding agency, the Comptroller General of the United States, and if appropriate, the State,

through any authorized representative, access to and the right to examine all records, books, papers, or documents related to the award; and will establish a proper accounting system in accordance with generally accepted accounting standards or agency directives.

3. Will establish safeguards to prohibit employees from using their positions for a purpose that constitutes or presents the appearance of personal or organizational conflict of interest, or personal gain.
4. Will initiate and complete the work within the applicable time frame after receipt of approval of the awarding agency.
5. Will comply with the Intergovernmental Personnel Act of 1970 (42 U.S.C. Section 4728-4763) relating to prescribed standards for merit systems for programs funded under one of the nineteen statutes or regulations specified in Appendix A of OPM's Standards for a Merit System of Personnel Administration (5 C.F.R. 900, Subpart F).
6. Will comply with all Federal statutes relating to nondiscrimination. These include but are not limited to: (a) Title VI of the Civil Rights Act of 1964 (P.L. 88-352) which prohibits discrimination on the basis of race, color or national origin; (b) Title IX of the Education Amendments of 1972, as amended (20 U.S.C. Sections 1681-1683, and 1685-1686), which prohibits discrimination on the basis of sex; (c) Section 504 of the Rehabilitation Act of 1973, as amended (29 U.S.C. Section 794), which prohibits discrimination on the basis of handicaps; (d) the Age Discrimination Act of 1975, as amended (42 U.S.C. Sections 6101-6107), which prohibits discrimination on the basis of age; (e) the Drug Abuse Office and Treatment Act of 1972 (P.L. 92-255), as amended, relating to nondiscrimination on the basis of drug abuse; (f) the Comprehensive Alcohol Abuse and Alcoholism Prevention, Treatment and Rehabilitation Act of 1970 (P.L. 91-616), as amended, relating to nondiscrimination on the basis of alcohol abuse or alcoholism; (g) §§523 and 527 of the Public Health Service Act of 1912 (42 U.S.C. §§290 dd-3 and 290 ee-3), as amended, relating to confidentiality of alcohol and drug abuse patient records; (h) Title VIII of the Civil Rights Acts of 1968 (42 U.S.C. Section 3601 et seq.), as amended, relating to nondiscrimination in the sale, rental or financing of housing; (i) any other nondiscrimination provisions in the specific statute(s) under which application for Federal assistance is being made; and (j) the requirements of any other nondiscrimination statute(s) which may apply to the application.
7. Will comply, or has already complied, with the requirements of Title II and III of the Uniform Relocation Assistance and Real Property Acquisition Policies Act of 1970 (P.L. 91-646) which provide for fair and equitable treatment of persons displaced or whose property is acquired as a result of Federal or federally-assisted programs. These requirements apply to all interest in real property acquired for project purposes regardless of Federal participation in purchases.
8. Will comply, as applicable, with provisions of the Hatch Act (5 U.S.C. §§1501-1508 and 7324-7328) which limit the political activities of employees whose principal employment activities are funded in whole or in part with Federal funds.
9. Will comply, as applicable, with the provisions of the Davis-Bacon Act (40 U.S.C. §§276a to 276a-7), the Copeland Act (40 U.S.C. §276c and 18 U.S.C. §874), and the Contract Work Hours and Safety Standards Act (40 U.S.C. §§327-333), regarding labor standards for federally-assisted construction subagreements.
10. Will comply, if applicable, with flood insurance purchase requirements of Section 102(a) of the Flood Disaster Protection Act of 1973 (P.L. 93-234) which requires recipients in a special flood hazard area to participate in the program and to purchase flood insurance if the total cost of insurable construction and acquisition is $10,000 or more.
11. Will comply with environmental standards which may be prescribed pursuant to the following: (a) institution of environmental quality control measures under the National Environmental Policy Act of 1969 (P.L. 91-190) and Executive Order (EO) 11514; (b) notification of violating facilities pursuant to EO 11738; (c) protection of wetlands pursuant to EO 11990; (d) evaluation of flood hazards in floodplains in accordance with EO 11988; (e) assurance of project consistency with the approved State management program developed under the Coastal Zone Management Act of 1972 (16 U.S.C. §§1451 et seq.); (f) conformity of Federal actions to State (Clean Air) Implementation Plans under Section 176(c) of the Clean Air Act of 1955, as amended (42 U.S.C. §§7401 et seq.); (g) protection of underground sources of drinking water under the Safe Drinking Water Act of 1974, as

amended (P.L. 93-523); and, (h) protection of endangered species under the Endangered Species Act of 1973, as amended (P.L. 93-205).

12. Will comply with the Wild and Scenic Rivers Act of 1968 (16 U.S.C. Section 1271 et seq.) related to protecting components or potential components of the national wild and scenic rivers system.
13. Will assist the awarding agency in assuring compliance with Section 106 of the National Historic Preservation Act of 1966, as amended (16 U.S.C. 470), EO 11593 (identification and protection of historic properties), and the Archaeological and Historic Preservation Act of 1974 (16 U.S.C. 469a-1 et seq.).
14. Will comply with P.L. 93-348 regarding the protection of human subjects involved in research, development, and related activities supported by this award of assistance.
15. Will comply with the Laboratory Animal Welfare Act of 1966 (P.L. 89-544, as amended, 7 U.S.C. 2131 et seq.) pertaining to the care, handling, and treatment of warm blooded animals held for research, teaching, or other activities supported by this award of assistance.
16. Will comply with the Lead-Based Paint Poisoning Prevention Act (42 U.S.C. Section 4801 et seq.) which prohibits the use of lead based paint in construction or rehabilitation of residence structures.
17. Will cause to be performed the required financial and compliance audits in accordance with the Single Audit Act Amendments of 1996 and OMB Circular No. A-133, "Audits of States, Local Governments, and Non-Profit Organizations."
18. Will comply with all applicable requirements of all other Federal laws, executive orders, regulations and policies governing this program.

Signed by **Suzanne Houle** on **11/16/2016**

Form 20-16C

You must read and sign these assurances.

Certifications Regarding Lobbying, Debarment, Suspension and Other Responsibility Matters and Drug-Free Workplace Requirements.
Note: Fields marked with an * are required.

O.M.B Control Number 1660-0025

Applicants should refer to the regulations cited below to determine the certification to which they are required to attest. Applicants should also review the instructions for certification included in the regulations before completing this form. Signature on this form provides for compliance with certification requirements under 44 CFR Part 18, "New Restrictions on Lobbying; and 44 CFR Part 17, "Government-wide Debarment and Suspension (Non-procurement) and Government-wide Requirements for Drug-Free Workplace (Grants)." The certifications shall be treated as a material representation of fact upon which reliance will be placed when the Department of Homeland Security (DHS) determines to award the covered transaction, grant, or cooperative agreement.

1. Lobbying

A. As required by the section 1352, Title 31 of the US Code, and implemented at 44 CFR Part 18 for persons (entering) into a grant or cooperative agreement over $100,000, as defined at 44CFR Part 18, the applicant certifies that:

(a) No Federal appropriated funds have been paid or will be paid by or on behalf of the undersigned to any person for influencing or attempting to influence an officer or employee of any agency, a Member of Congress, an officer or employee of congress, or an employee of a Member of Congress in connection with the making of any Federal grant, the entering into of any cooperative agreement and extension, continuation, renewal amendment or modification of any Federal grant or cooperative agreement.

(b) If any other funds than Federal appropriated funds have been paid or will be paid to any person for influencing or attempting to influence an officer or employee of any agency, a Member of Congress, an officer or employee of congress, or an employee of a Member of Congress in connection with this Federal grant or cooperative agreement, the undersigned shall complete and submit Standard Form LLL, "Disclosure of Lobbying Activities", in accordance with its instructions.

(c) The undersigned shall require that the language of this certification be included in the award documents for all the sub awards at all tiers (including sub grants, contracts under grants and cooperative agreements and sub contract(s)) and that all sub recipients shall certify and disclose accordingly.

2. Debarment, Suspension and Other Responsibility Matters (Direct Recipient)

A. As required by Executive Order 12549, Debarment and Suspension, and implemented at 44CFR Part 67, for prospective participants in primary covered transactions, as defined at 44 CFR Part 17, Section 17.510-A, the applicant certifies that it and its principals:

(a) Are not presently debarred, suspended, proposed for debarment, declared ineligible, sentenced to a denial of Federal benefits by a State or Federal court, or voluntarily excluded from covered transactions by any Federal department or agency.

(b) Have not within a three-year period preceding this application been convicted of or had a civilian judgment rendered against them for commission of fraud or a criminal offense in connection with obtaining, attempting to obtain or perform a public (Federal, State, or local) transaction or contract under a public transaction; violation of Federal or State antitrust statutes or commission of embezzlement, theft, forgery, bribery, falsification or destruction of records, making false statements, or receiving stolen property.

(c) Are not presently indicted for or otherwise criminally or civilly charged by a government entity (Federal, State, or local) with commission of any of the offenses enumerated in paragraph (1)(b) of this certification: and

(d) Have not within a three-year period preceding this application had one or more public transactions (Federal, State, or local) terminated for cause or default; and

B. Where the applicant is unable to certify to any of the statements in this certification, he or she shall attach an explanation to this application.

3. Drug-Free Workplace (Grantees other than individuals)

As required by the Drug-Free Workplace Act of 1988, and implemented at 44CFR Part 17, Subpart F, for grantees, as defined at 44 CFR part 17, Sections 17.615 and 17.620:

(A) The applicant certifies that it will continue to provide a drug-free workplace by:

(a) Publishing a statement notifying employees that the unlawful manufacture, distribution, dispensing, possession, or use of a controlled substance is prohibited in the grantee's workplace and specifying the actions that will be taken against employees for violation of such prohibition;
(b) Establishing an on-going drug free awareness program to inform employees about:

(1) The dangers of drug abuse in the workplace;
(2) The grantees policy of maintaining a drug-free workplace;
(3) Any available drug counseling, rehabilitation and employee assistance programs; and
(4) The penalties that may be imposed upon employees for drug abuse violations occurring in the workplace;

(c) Making it a requirement that each employee to be engaged in the performance of the grant to be given a copy of the statement required by paragraph (a);
(d) Notifying the employee in the statement required by paragraph (a) that, as a condition of employment under the grant, the employee will:

(1) Abide by the terms of the statement and
(2) Notify the employee in writing of his or her conviction for a violation of a criminal drug statute occurring in the workplace no later than five calendar days after such conviction.

(e) Notifying the agency, in writing within 10 calendar days after receiving notice under subparagraph (d)(2) from an employee or otherwise receiving actual notice of such conviction. Employers of convicted employees must provide notice, including position title, to the applicable DHS awarding office, i.e. regional office or DHS office.
(f) Taking one of the following actions, against such an employee, within 30 calendar days of receiving notice under subparagraph (d)(2), with respect to any employee who is so convicted:

(1) Taking appropriate personnel action against such an employee, up to and including termination, consistent with the requirements of the Rehabilitation Act of 1973, as amended; or
(2) Requiring such employee to participate satisfactorily in a drug abuse assistance or rehabilitation program approved for such purposes by a Federal, State, or local health, law enforcement or other appropriate agency.

(g) Making a good faith effort to continue to maintain a drug free workplace through implementation of paragraphs (a), (b), (c), (d), (e), and (f).

(B) The grantee may insert in the space provided below the site(s) for the performance of work done in connection with the specific grant:

Place of Performance				
Street	City	State	Zip	Action

If your place of performance is different from the physical address provided by you in the Applicant Information, press *Add Place of Performance* button above to ensure that the correct place of performance has been specified. You can add multiple addresses by repeating this process multiple times.

Section 17.630 of the regulations provide that a grantee that is a State may elect to make one certification in each Federal fiscal year. A copy of which should be included with each application for DHS funding. States and State agencies may elect to use a Statewide certification.

Signed by **Suzanne Houle** on **11/16/2016**

FEMA Standard Form LLL

Only complete if applying for a grant for more than $100,000 and have lobbying activities. See Form 20-16C for lobbying activities definition.

Submit Application

Application 100% complete, Submitted

Please click on any of the following links to visit a particular section of your application. Once all areas of your application are complete, you may submit your application.

Application Area	Status
Applicant's Acknowledgements	Complete
Overview	Complete
Contact Information	Complete
Applicant Information	Complete
Applicant Characteristics (I)	Complete
Applicant Characteristics (II)	Complete
Department Call Volume	Complete
Request Information	Complete
Request Details	Complete
Budget	Complete
Assurances and Certifications	Complete

PLEASE READ THE FOLLOWING STATEMENTS BEFORE YOU SUBMIT.

- **YOU WILL NOT BE ALLOWED TO EDIT THIS APPLICATION ONCE IT HAS BEEN SUBMITTED. If you are not yet ready to submit this application, save it, and log out until you feel that you have**

no more changes.

- **When you submit this application, you, as an authorized representative of the organization applying for this grant, are certifying that the following statements are true:**

  To the best of my knowledge and belief, all data submitted in this application are true and correct.

  This application has been duly authorized by the governing body of the applicant and the applicant will comply to the Assurances and Certifications if assistance is awarded.

To sign your application, check the box below and enter your password in the space provided. To submit your application, click the Submit Application button below to officially submit your application to FEMA.

Note: The primary contact will be responsible for signing and submitting the application. Fields marked with an * are required.

I, Suzanne Houle, am hereby providing my signature for this application as of 18-Nov-2016.

City of Deltona

2345 Providence Blvd.
Deltona, FL 32725

Agenda Memo

AGENDA ITEM: C.

TO: Mayor and Commission **AGENDA DATE:** 12/12/2016

FROM: Jane K. Shang, City Manager **AGENDA ITEM:** 8 - C

SUBJECT:
Request approval of the budget amendment for the Saxon Stormwater Vault Pump Station (non-sewer), Matt Doan, P.E., Acting Public Works Director, (386) 878-8973.

Strategic Goal: Fiscal Issues

LOCATION:
Public Works

BACKGROUND:
The Florida Department of Transportation (FDOT) is planning to implement improvements at the intersection of Interstate 4 (I-4) and Saxon Boulevard within the City of Deltona (City). The City intends to partner with the FDOT to capture and treat the runoff related to these improvements.

The City will design and permit a pump station and associated stormwater force main to divert the water to its regional water management site located at Alexander Avenue. The stormwater vault will be located at the northwest corner of the intersection of Saxon Boulevard and Finland Drive. The stormwater force main will connect to a newly constructed pump station in the stormwater vault and discharge at the Alexander Avenue Site approximately 2.75 miles away.

Funds are available in the Fund Balance.

COST:
$49,876.00

SOURCE OF FUNDS:
Stormwater Funds

ORIGINATING DEPARTMENT:
Matt Doan, P.E., Acting Public Works Director, (386) 878-8973

STAFF RECOMMENDATION PRESENTED BY:
Matt Doan, P.E., Acting Public Works Director, recommends the City Commission approve the budget amendment for the Saxon Stormwater Vault Pump Station Preliminary Design and Conceptual Permitting.

powered by Legistar™

AGENDA ITEM: C.

POTENTIAL MOTION:
“I move to approve the budget amendment for the Saxon Stormwater Vault Pump Station Preliminary Design and Conceptual Permitting.”

ATTACHMENT A

PROPOSAL FOR PROFESSIONAL ENGINEERING SERVICES

CITY OF DELTONA
SAXON BOULEVARD STORMWATER VAULT PUMP STATION
PRELIMINAIRY DESIGN AND CONCEPTUAL PERMITTING

I. PROJECT DESCRIPTION

The Florida Department of Transportation (FDOT) is planning to implement improvements at the intersection of Interstate 4 (I-4) and Saxon Boulevard within the City of Deltona (City). The City intends to partner with the FDOT to capture and treat the runoff related to these improvements. The City will design and permit a pump station and associated stormwater force main to divert the water to its regional water management site located at Alexander Avenue. The stormwater vault will be located at the northwest corner of the intersection of Saxon Boulevard and Finland Drive. The stormwater force main will connect to a newly constructed pump station in the stormwater vault and discharge at the Alexander Avenue Site approximately 2.75 miles away.

The City has elected to implement preliminary engineering services which will allow the City to review critical aspects of the project and obtain a conceptual permit. Tetra Tech will deliver to the City as the technical product of this fee proposal the following documents:

1. Preliminary Design Memorandum sizing the pump station and analyzing two potential stormwater force main routes.

2. A St. Johns River Water Management District Conceptual Environmental Resource Permit application that will be submitted for review by District staff.

Professional services will be provided in accordance with the Continuing Consulting Agreement titled Agreement between City of Deltona and Tetra Tech, Inc. for On-Call Stormwater Engineering Services Dated November 2015.

II. SCOPE OF SERVICES

A. Project Meetings

The purpose of the project meetings is to discuss design options and alternatives with FDOT and SJRWMD. Tetra Tech will prepare figures and other documents for discussion purposes at the meetings. Attendance at two (2) project meetings, one status meeting and one pre-application meeting with the District, are included.

B. Preliminary Design

The purpose of the Preliminary Design phase is to present route alternatives and discuss construction feasibility that will allow the City to make an informed decision as to how final design of the project shall proceed. Preliminary design tasks will involve gathering information, state agency, private property owner and regulatory coordination, evaluation of pump station flows, evaluation of stormwater force main sizing, evaluation and corridor analysis to determine the recommended alignment of the proposed facilities, evaluation of pond sizing of the stormwater pond at the Alexander Avenue Site, and evaluation of and development of a preliminary opinion of probable construction cost. Detailed descriptions of the tasks associated with the various aspects of preliminary engineering are presented below:

1. Attend a project kick-off meeting with City staff to establish lines of communication, contract requirements, project schedule and reporting requirements. Tetra Tech will be responsible for preparing a summary of the meeting.

2. Collect and review available road and utility records, aerials, LiDAR, soils publications, wetlands, and utilities along the project corridor that have a bearing and impact on the planning, design, permitting and construction or operation of the proposed improvements. A total of two (2) routes are included.

3. Perform site visits to observe the existing conditions and constraints along the corridors.

4. Coordinate with the following utility companies, and any others, to understand the extent of other existing utilities and other future improvement projects for evaluation of potential route conflicts. Submit a design ticket to Sunshine 811 to verify the utility companies in the project corridor.

5. Utilize the FDOT hydrologic calculations to perform hydraulic calculations for the pump station and stormwater force main analysis.

6. Evaluate the project corridor based on the information gathered, the City's standard design criteria, permitting requirements and methods of construction.

7. Prepare an 11x17 preliminary layout of the proposed alignment of the force mains designed to a 30% completion level which will aid in obtaining a conceptual ERP.

8. Prepare a preliminary opinion of probable construction costs for the project.

9. Prepare a draft technical memorandum summarizing the findings, conclusions, and recommendations resulting from completion of the above tasks.

10. Attend one (1) review meeting with the City to discuss the draft technical memorandum.

11. Finalize the draft technical memorandum pursuant to the review meeting with the City.

C. Permitting

Tetra Tech will complete the following permitting services:

1. Prepare the SJRWMD Conceptual ERP application including response to check list questions and preparation of associated maps and figures. Permit application fee shall be paid separately by the City.

2. Because of the unknown nature of Requests for Additional Information (RAI) we have not provided a definitive amount as to the effort it will take to respond to an RAI. A Time and Material allotment has been provided in Task D below. This is based on an average of what it typically requires to respond to RAIs for projects of this nature. In addition, the budgeted amount is based on the assumption that SJRWMD will not require a pollutant load mitigation plan or BMP design because this project is intended to treat the stormwater for public access reuse.

D. Time and Material - Modeling

This is a time and material task for the costs of services that may be required beyond the scope above for the following tasks: additional ICPR modeling if FDOT provides limited data for the potential impacts to Trout Lake; and the potential for extended simulation modeling that may be required by SJRWMD to assess hydrological impact on Trout Lake.

The additional ICPR modeling may result would be a result of the FDOT only providing the level of detail that would be necessary for their internal needs which would fall short of the requirements from the SJRWMD. Tetra Tech the City would then be required to make up for this difference. This would also include conducting the additional hydraulic calculations to resize the vault and pumps. In addition, the SJRWMD has indicated that the effort to obtain a permit for this project will have to demonstrate that there will not be any adverse effects to the hydrology of Trout Lake. This will involve the preparation of a water budget analysis to preliminarily simulate an extended period model. We anticipate demonstration this to the SJRWMD using a spreadsheet analysis that will compare a sensitivity analysis of the change in water budget that would be anticipated for an extended period. The period of time that'll have to be analyzed will have to be established in a pre-application meeting with the SJRWMD.

E. Time and Material - Permitting

This is a time and material task for the costs of services that may be required to respond to an RAI for the Conceptual Environmental Resource Permit application that will be submitted to SJRWMD. This task will only be used for services related to an RAI. A total of **$5,000** has been included for this task.

F. Reimbursable Expenses

1. Production expenses for reproduction of up to four (4) copies of the Preliminary Design Memorandum at the Draft and Final completion milestones. We will also submit an additional three (3) copies of the permit application documents.

2. Other direct costs.

3. Mailings and overnight deliveries.

III. COMPENSATION SUMMARY

The proposed compensation for the Scope of Services described in Section II is summarized below. Attachment B presents a detailed breakdown of the estimated compensation for the Scope of Services.

Task	Fee
Meetings	$4,959
Preliminary Design	$21,160
Permitting	$4,773
Time and Material Contingency for Modeling	$13,390
Time and Material Contingency for Permitting	$5,000
Reimbursable Expenses	$594
Total Lump Sum	**$49,876**

IV. SCHEDULE

The anticipated delivery schedule for the project is presented below:

Task	Duration (weeks)	Cumulative Weeks from NTP
Kick-Off Meeting / Notice to Proceed	0	0
Preliminary Design	3	3
Draft Preliminary Design Memorandum	2	5
City Preliminary Design Memorandum Review	2	7
Final Preliminary Design Memorandum	1	8
Conceptual ERP	12	20

V. SERVICES NOT INCLUDED

A. Design or site plan related to sizing the concrete storage vault. It is our understanding that this will be the responsibility of FDOT.

B. All matters related to the purchase of the residential properties. It's our understanding that all of this will be the responsibility of FDOT.

C. SJRWMD Permit application fee (**anticipated to be $1,190** per District fee list).

D. Survey.

E. Verification of record drawing information, as-built dimensions, or shop drawings data.

F. Final Design, Bidding and Construction Administration Services will be authorized separately.

G. Ecological Services.

H. Geotechnical Services.

ATTACHMENT "A"
TASK AUTHORIZATION FORM

In accordance with the Continuing Services Agreement between the City of Deltona, Florida, hereinafter referred to as "City", and Tetra Tech, hereinafter referred to as "Consultant", the City hereby authorizes Consultant to proceed with the services as set forth in the attached task order proposal as follows:

Tt Project Number: BP-08534
Engineering Firm: Tetra Tech

Scope of Work: Saxon Boulevard Vault Stormwater Pump Station and Forcemain – Preliminary Engineering Services

Estimated Fees:

Task	Fee
Meetings	$4,959
Preliminary Design	$21,160
Permitting	$4,773
Time and Material Contingency for Modeling	$13,390
Time and Material Contingency for Permitting	$5,000
Reimbursable Expenses	$594
Total Lump Sum	**$49,876**

Consultant's Project Manager: Michael Saxton, P.E.

City's Designated Project Leader: Matthew Doan, P.E., Deputy Public Works Director

CONSULTANT

Accepted By: Roderick Cashe 11/29/2016
Roderick Cashe, P.E. Date
Sr. Project Manager

CITY

Reviewed and Accepted By: _____ _____
Public Works Director Date

If more than $5,000:

Reviewed and Accepted By: _____ _____
City Manager Date

_____ _____
Deputy City Manager Date

cc: Roderick K. Cashe, P.E., Tetra Tech
Anke Backer, Tetra Tech

TETRA TECH

City of Deltona

Exhibit A

Budget Transfer

Fiscal Year 2016-2017

Amendment #:	2017-12	Date:	December 12, 2016	
Fund:	Stormwater Fund	Agenda Item:		
			Increase	Decrease
Account #:	101651 650100 23221	Amount:	50,000	
Description:	SAXON SW VAULT PUMP STATION			
Account #:		Amount:		
Description:				
Account #:		Amount:		
Description:				
Account #:		Amount:		
Description:				
Account #:		Amount:		
Description:				
Account #:		Amount:		
Description:				
Account #:		Amount:		
Description:				
Account #:		Amount:		
Description:				
Account #:		Amount:		
Description:				
Account #:		Amount:		
Description:				

Description: This amendment results in a net decrease in Budgetary Fund Balance of $50,000.

Reason: **The Florida Department of Transportation (FDOT) is planning to implement improvements at the intersection of Interstate 4 (I-4) and Saxon Boulevard within the City of Deltona (City). The City intends to partner with the FDOT to capture and treat the runoff related to these improvements**

ATTEST:

John C. Masiarczyk, Sr., Mayor

Joyce Raftery, City Clerk

City of Deltona

2345 Providence Blvd.
Deltona, FL 32725

Agenda Memo

AGENDA ITEM: D.

TO: Mayor and Commission **AGENDA DATE:** 12/12/2016

FROM: Jane K. Shang, City Manager **AGENDA ITEM:** 8 - D

SUBJECT:
Request for approval of the Hawksley Consulting Inc. Agreement, Matt Doan, P.E., Acting Public Works Director, (386) 878-8973.

Strategic Goal: Fiscal Issues

LOCATION:
Public Works - Deltona Water

BACKGROUND:
In 2008 the City Commission approved Burton & Associates Inc. for Consulting Services for a Water, Wastewater and Reclaimed Water Rates and Charges Study in accordance with a City of Deltona RFQ#0841. This Study allowed for a review of the current rates and a determination of future rates. Staff received five responses to RFQ#0841. Burton and Associates Inc. was ranked the highest by the Selection Committee.

On October 24, 2012 the City Commission approved Resolution No. 2012-35 and directed Staff to hire a rate consultant for purposes of both fulfilling the need for a rate consultant for the upcoming Swaption refinance, as well as explore rate options that would bring relief to the current sewer customers. It was noted that The City of Plant City recently awarded a contract for a Water and Wastewater Rate Study to be completed by Burton & Associates Inc. through RFP 12-9466-001. As Burton & Associates Inc. conducted the original rate study for Deltona Water in 2008 and had also worked with the City's current Financial Advisor, FirstSouthwest, on previous occasions. Burton & Associates Inc. was contacted to determine if they can not only meet the needs required by FirstSouthwest, but also be flexible to try several alternative rate scenarios in an effort to provide relief to our sewer customers. Burton & Associates Inc. submitted a proposal, tailored to the City of Deltona, stating that they feel that they could meet our requirements and have preliminary results back within 60 days of receiving a notice to proceed and a full report completed within 90 days. Burton & Associates Inc. created a model that was able to provide "what if" scenarios that allow the City to explore different rate options and determine their results instantaneously. They also provide one on one meeting with City Staff and the City Commission also take place along with a presentation of the rate study update at a City Commission Workshop.

In 2015 and 2016 Burton & Associates Inc. provided the the same services via a proposal. The Proposal was tailored to the City of Deltona and Burton & Associates Inc. was used as a Standardized Vendor.

AGENDA ITEM: D.

The City of Deltona would like to request the services of Burton and Associates Inc. a subsidiary of Hawksley Consulting for Water, Wastewater and Reclaimed Water Rate Study and Financial Management Services. A proposal has been submitted and attached as Exhibit A. We believe to seek out other firms to provide this service and future rate studies would be cost prohibitive; as new firms would need to essentially re-create a model from scratch whereas Hawksley Consulting Inc. only requires updating the parameters that are currently in place. Staff is requesting the approval of the agreement with Hawksley Consulting Inc. the successor in interest to Burton and Associates Inc. on an as needed basis for a period of two (2) years with three (3) additional one (1) year renewal options by mutual agreement of the parties.

COST:
$32,000.00

SOURCE OF FUNDS:
Enterprise Funds

ORIGINATING DEPARTMENT:
Matt Doan, P.E., Acting Public Works Director, (386) 878-8973

STAFF RECOMMENDATION PRESENTED BY:
Matt Doan, Acting Public Works Director, recommends the City Commission approve and enter into the Hawksley Consulting Inc. agreement for the the Water, Wastewater and Reclaimed Water Rate Study and Financial Management Services.

POTENTIAL MOTION:
“I motion for the approval the Hawksley Consulting Inc for the the Water, Wastewater and Reclaimed Water Rate Study and Financial Management Services.”

November 7, 2016

Mr. Matthew Doan, P.E.
Interim/Deputy Public Works Director
255 Enterprise Road
Deltona, Florida 32725

Re: Water, Wastewater, and Reclaimed Water Rate Study & Financial Management Services

Dear Matt:

As requested, I am pleased to present the City of Deltona (City) with this proposal to perform rate, financial, and economic analyses on behalf of the City's water, wastewater, and reclaimed water utility systems. As discussed, the scope of our services will include the following:

1) Development of financial forecasts and rate adjustment plans, including reconciliation with Finance
2) Customer and demand analysis, including regression analysis, usage profiles, and forecasting
3) Cost of service allocations between various classes of users, including outside city customers
4) Retail and wholesale rate structure evaluations and modifications
5) Updates to specific fees, such as connection fees, late fees, deposits, fire protection charges, etc.
6) Calculation of capital cost recovery fees, such as impact fees
7) Preparation of bond feasibility reports and assistance in loan applications (SRF, USDA, etc.)
8) Presentations to Management, Commission, and the public relative to utility rates and finance
9) Assistance in development of inter-local service agreements and rate ordinance/resolutions
10) Evaluation of financial feasibility of utility acquisitions and service area modifications
11) Operational, financial performance, rate/fee, and other benchmarking activities
12) Assistance in rating agency credit reviews and preparation of bond-related documents
13) Affordability, regulatory compliance, and regionalization analyses
14) Review and modifications to key financial policies, such as reserve and debt coverage targets

As I understand that the timing and exact scope requirements of each of these services is difficult to predict at this time, we propose to develop specific task orders (fixed fee or time and materials based) for each individual service (using the hourly rates included herein) as you are able to better define the scope and timing requirements. I believe this will allow for the utmost flexibility to address the exact requirements of the enterprise fund as they evolve/change while being as efficient as possible with its limited resources.

We appreciate the opportunity to present this proposal and look forward to working with you on this assignment. If you have any questions, please do not hesitate to call me at (813) 443-5138. Otherwise, please proceed with incorporating this proposal into a draft contract for our review and execution.

Very truly yours,

Andrew J. Burnham
Utility Financial Solutions Director

Hourly Rates By Category Effective for 2017:

Project Principal	$335.00
Project Director	$265.00
Managing Consultant	$205.00
Consultant	$155.00
Analyst	$130.00
Administration	$100.00

The hourly rates presented herein may be adjusted in the future as mutually agreed upon by both parties.

AGREEMENT BETWEEN
CITY OF DELTONA, FLORIDA AND
HAWKSLEY CONSULTING INC
FOR WATER, WASTEWATER & RECLAIMED WATER RATE STUDY AND FINANCIAL MANAGEMENT SERVICES

THIS AGREEMENT is made and entered into this day of_____, 2016 by and between the CITY OF DELTONA, a municipality of the State of Florida, whose address is 2345 Providence Boulevard, Deltona, Florida 32725, hereinafter called the "City" and Hawksley Consulting Inc., duly authorized to conduct business in the State of Florida, whose principal address is 777 South Harbour Island Boulevard, Suite 600, Tampa, Florida, 33602, hereinafter called the "Consultant".

WHEREAS, the City desires to obtain services related to conduct Water, Wastewater and Reclaimed Water Rate Study and Financial Management Services. The work generally involves all work as described in the Consultant's Proposal Exhibit A; and

WHEREAS, the Consultant desires to perform such services subject to the terms of this Agreement; and

NOW, THEREFORE, IN CONSIDERATION of the mutual terms, understandings, conditions, premises, covenants and payment hereinafter set forth, and intending to be legally bound, the parties hereby agree as follows:

Article 1. Recitals

1.1 The foregoing recitals are true and correct and incorporated herein by reference.

Article 2. Scope of Professional Services

2.1 On the terms and conditions set forth in this Agreement, City hereby engages Consultant to conduct Water, Wastewater and Reclaimed Water Rate Study and Financial Management Services on an as needed basis.

2.2 The Consultant acknowledges and agrees that if the work is assigned to the Consultant, each individual project shall have a specific Scope of Services agreed to by the parties and a task order shall be executed by both parties. The task order shall include all necessary provisions including, but not limited to, setting forth the compensation payable, time for payment, deliverables, electronic and printed formats and any other items relevant to the task. The task order shall be signed by the parties prior to the Consultant performing any of the agreed upon work. All task orders shall be

reviewed and approved by the City in writing prior to the Consultant beginning any work on the assigned project or payment being made to the Consultant.

2.3 The term of this Agreement shall be for two (2) years with three (3) additional one (1) year renewal options by mutual agreement of the parties.

2.4 The services to be rendered by the Consultant shall include all labor, materials and incidentals necessary to perform all work indicated and specified in the relevant task order.

2.5 Consultant acknowledges that nothing herein shall be deemed to preclude the City from retaining the services of other persons or entities undertaking the same or similar services as those undertaken by the Consultant or from independently developing or acquiring materials or programs that are similar to or competitive with, the services provided under this Agreement.

Article 3. Compensation

3.1 The City agrees to compensate Consultant for work performed, completed and accepted by the City's representative for services provided at a cost negotiated for a particular task order. Fees for any additional work needed will be agreed upon prior to any service being completed.

3.2 Payment for any and all invoices that may arise as a result of a purchase order issued pursuant to this specification shall minimally meet the following conditions to be considered as a valid payment request:

3.2.1 A timely submission of properly certified invoices, in strict accordance with the prices and delivery elements as stipulated in the purchase order document, submitted to the Finance Department at the address stipulated on the Purchase Order.

3.2.2 All invoices submitted shall consist of an original and one (1) copy; clearly reference the purchase order number; provide a sufficient salient description to identify goods or service for which payment is requested; contain date of delivery; original or legible copy of signed delivery receipt including both manual signature and printed name of a designated City employee or authorized Agent; and be clearly marked as "partial", "complete" or "final" invoice. The City will accept partial deliveries.

3.2.3 The invoice shall contain the Consultant's Federal Employer Identification Number.

3.2.4 The City's terms are "Net 30 Days" after acceptance of goods or services and receipt of an acceptable invoice as described herein. Any discounts must be offered Proposal in the relevant task order.

3.3 The Consultant shall not be entitled to payment for any other expenses, fees, or other costs it may incur at any time and in any connection with its performance hereunder other than those fees as stated above. The Consultant hereby agrees that the total cost, as stated above, is inclusive of all overhead and administrative expenses.

4.1 City shall promptly review the deliverables and other materials submitted by Consultant and provide direction to Consultant as needed. City shall designate one City staff member to act as City's Project Administrator and/or Spokesperson.

4.2 The City will provide to the Consultant all necessary and available data developed and/or within the possession of the City, and any other data the City possesses that would be useful to the Consultant in the completion of the required services. Consultant is entitled to reasonably rely upon the information, data and documents provided by the City, its representatives or from generally accepted sources without independent verification.

Article 5. Special Terms and Conditions

5.1 Qualifications. Firms or individuals shall be registered with the State of Florida and have obtained at least the minimum thresholds of education and professional experience required by to perform the services contained herein.

5.2 Termination. This Agreement may be terminated by the City upon thirty (30) days advance written notice to the Consultant; but if any work is in progress but not completed as of the date of termination, then this Agreement may be extended upon written approval of the City until said work is completed by the Consultant and accepted by the City.

A. Upon notification to the Consultant of termination by the City, Consultant will immediately discontinue all services affected unless the notice directs otherwise.

B. Termination for Convenience. In the event this Agreement is terminated or cancelled upon the request and for the convenience of City, City shall reimburse Consultant for actual work satisfactorily completed.

C. Termination for Cause. If the termination of this Agreement is due to the failure of the Consultant to fulfill his contractual obligations, City shall reimburse Consultant for actual work satisfactorily completed, and City may take over the work and prosecute the same to completion by Agreement or otherwise.

D. In the event of termination of this Agreement, all work, reports, and other work product produced by Consultant in connection with the Agreement shall be returned to the City and become and remain the property of the City.

5.3 Assignment. This Agreement may not be assigned or transferred in any manner by Engineer without prior written authorization from the City.

5.4 Insurance and Bond. Consultant shall provide and maintain, during the entire term of this Agreement, without cost to the City, insurance in the following types and limits with a company

or companies authorized to do business in the State of Florida and rated "Class A" or better by A. M. Best or some other form of assurance approved by the City's Risk Manager. Consultant shall not commence work under the Agreement until City has received an acceptable certificate or certificates of insurance and endorsement evidencing the required insurance, which is as follows: Consultant shall not commence work under the Agreement until City has received an acceptable certificate or certificates of insurance and endorsement evidencing the required insurance, with the following minimum limits and coverage limits fully available during the entire contract period:

(A) Professional liability (medical malpractice, engineers, architect, environmental, errors and omissions, etc.) insurance as applicable, with minimum limits of $1,000,000. Professional liability insurance shall be maintained for at least one year from the termination of the Agreement.

(B) General Liability insurance on forms no more restrictive than the latest edition of the Commercial General Liability policy (CG 00 01 or CG 00 02) of the Insurance Services Office or equivalent without restrictive endorsements, with the minimum limits and coverage of $1,000,000 per occurrence; combined single limit for Bodily Injury Liability and Property Damage Liability. This shall include Premises and/or Operations, Independent Contractors, and Products and/or Completed Operations, and a Contractual Liability Endorsement.

(C) Contractor/Consultant shall maintain automobile liability insurance with a limit of not less than $1,000,000 combined single limit each accident; $500,000 bodily injury per person; $500,000 bodily injury per accident; $300,000 property damage. Such insurance shall cover liability arising out of any auto, including owned, hired and non-owned autos. The policy shall be endorsed to provide contractual liability coverage.

(D) Workers' compensation insurance in accordance with Florida Statute, Chapter 440, and/or any other applicable law requiring workers' compensation (Federal, maritime, etc).

(E) Additional Requirements.

(1) **City of Deltona shall be <u>named and endorsed</u> as an additional insured on the General liability policy.**

(2) The General Liability policy is to contain or be endorsed to name the City, its officers, officials and employees as additional insureds as respects to the liability arising out of the activities performed under this Agreement. Such coverage shall be primary to the extent of Consultants negligent acts or omissions or willful misconduct, and shall apply separately to each insured against whom claim is made or suit is brought, except with respect to the limits of the insurer's liability. In addition, a waiver of subrogation by the commercial liability insurer shall be provided that lists or names the additional

insured as subject to the waiver. Coverage shall be on an "occurrence" basis and not "claims made".

(3) Certificates of insurance shall provide for a minimum of thirty (30) days prior written notice to the City of any material change or cancellation of the required insurance, with ten (10) day written notice of cancellation due to non-payment of premium.

(4) Certificates of insurance shall identify the Bid number, contract, project, etc. in the Description of Operations section of the Certificate.

(5) Consultant shall be responsible for subcontractors and their insurance.

(6) The Certificate holder section of each policy shall state: City OF DELTONA, 2345 PROVIDENCE BOULEVARD, DELTONA, FLORIDA 32725.

(7) Consultant shall be solely responsible for all deductibles and self-insurance retention on Liability Insurance policies. All of the policies of insurance so required to be purchased and maintained shall contain a provision or endorsement that the coverage afforded shall not be canceled, materially changed or renewal refused without thirty (30) calendar days written notice, or without ten (10) days written notice of cancellation due to non-payment of premium, being given to City by certified mail.

5.5 Indemnity. Consultant shall indemnify and hold City and its agents, officers, commission, or employees harmless for any damages resulting from failure of Consultant to take out and maintain the above insurance. Additionally, Consultant agrees to indemnify, defend and hold the City, and its officers, commission, employees and agents free and harmless from and against any and all losses, penalties, damages, settlements, costs, charges, professional and attorney fees, court costs, other expenses and liabilities to the extent resulting from the negligent act, error or omission of Consultant, its agents, employees or representative, in the performance of Consultant's duties set forth in this Agreement, including any act alleged to give rise to an action in inverse condemnation.

5.6 Independent Contractor. Consultant agrees that it shall be acting as an independent contractor and shall not be considered or deemed to be an agent, employee, joint venturer, or partner of City. Consultant shall have no authority to contract for or bind City in any manner and shall not represent itself as an agent of City or as otherwise authorized to act for or on behalf of City.

5.7 Ownership of Deliverables.

(a) Title to all work product produced by Consultant pursuant to this Agreement shall be and remain the sole and exclusive property of City when produced. Consultant shall deliver all such original work product to City upon completion thereof unless it is necessary for Consultant,

in City's sole discretion to retain possession for a longer period of time.

(b) The documents, reports, and similar materials provided or created by Consultant are public records and Consultant shall abide by applicable requirements of Florida law. Consultant shall notify the City within 24 hours of receiving the request to release the information concerning the subject project to a member of the media and/or to the public. The City's notification shall to the extent possible provide the name, date, time and type of information requested to be released prior to the Consultant's release or disclosure of information to the media or to the public.

5.8 Confidentiality and Intellectual Property. Each party shall keep all information and intellectual property rights provided by the other confidential and shall not disclose or transmit such information without the consent of the other. Methodologies, process know-how and other instruments of service used to prepare Deliverables shall remain the property of Consultant, including (without limitation) the financial analysis and management modeling system known as FAMS – XL.

5.9 Return of Materials. Upon the request of the City, but in any event upon termination of this Agreement, Consultant shall surrender to the City all memoranda, notes, records, and other documents or materials pertaining to the services hereunder, that were furnished to the Consultant by the City pursuant to this Agreement. Consultant may keep copies of all work products for its records.

5.10 NO CLAIM FOR DAMAGES OR ANY CLAIM OTHER THAN FOR AN EXTENSION OF TIME SHALL BE MADE OR ASSERTED AGAINST THE CITY BY REASON OF ANY DELAYS. No interruption, interference, inefficiency, suspension or delay in the commencement or progress of the work from any cause whatsoever, shall relieve the Consultant of his duty to perform or give rise to any right to damages or additional compensation from the City. The Consultant expressly acknowledges and agrees that the Consultant shall receive no damages for delay. The Consultant's sole remedy, if any, against the City shall be the right to seek an extension to the contract time.

5.11 Retaining Other Consultants. Nothing herein shall be deemed to preclude the City from retaining the services of other persons or entities undertaking the same or similar services as those undertaken by the Consultant or from independently developing or acquiring materials or programs that are similar to or competitive with, the services provided under this Agreement.

5.12 Accuracy. The Consultant is responsible for the professional quality, technical accuracy, timely completion and coordination of all the services furnished hereunder. The Consultant shall, without additional compensation, correct or revise any errors, omissions or other deficiencies in its designs, drawings, reports or other services.

5.13 Codes and Regulations. All work completed under this Agreement shall at all times comply with all applicable federal, state and local statutes, codes, regulations and ordinances.

5.14 Public Entity Crimes. A person or affiliate who has been placed on the convicted vendor list following a conviction of a public entity crime may not be awarded or perform work as a contractor, supplier, subcontractor, or engineer under a contract with any public entity in excess of the threshold amount provided in Florida Statutes, section 287.017 for Category Two for a period of thirty-six (36) months from the date of being placed on the convicted vendor list.

5.15 Prohibition against Contingent Fees. Consultant warrants that they have not employed or retained any company or person, other than a bona fide employee working solely for the Consultant to solicit or secure this Agreement and that they have not paid or agreed to pay any person, company, corporation, individual, or firm, other than a bona fide employee working solely for the Consultant, any fee, commission, percentage, gift or other consideration contingent upon or resulting from the award or making of this Agreement.

5.16 Public Records. The Consultant shall allow public access to all documents, papers, letters, or other material subject to the provisions of Chapter 119, Florida Statutes, and made or received by the Consultant in conjunction with this Agreement. Specifically, the Consultant shall:

(a) Keep and maintain public records that ordinarily and necessarily would be required by the City in order to perform the service.

(b) Provide the public with access to public records on the same terms and conditions that the City would provide the records and at a cost that does not exceed the cost provided in state law or as otherwise provided by law.

(c) Ensure that public records that are exempt or confidential and exempt from public records disclosure requirements are not disclosed except as authorized by law.

(d) Meet all requirements for retaining public records and transfer, at no cost, to the City all public records in possession of the Consultant upon termination of the Agreement and destroy and duplicate public records that are exempt or confidential and exempt from the public records disclosure requirements. All records stored electronically must be provided to the City in a format that is compatible with the information technology system of the City.

(e) IF THE CONTRACTOR HAS QUESTIONS REGARDING THE APPLICATION OF CHAPTER 119, FLORIDA STATUTES, TO THE CONTRACTOR'S DUTY TO PROVIDE PUBLIC RECORDS RELATING TO THIS CONTRACT, CONTACT THE CUSTODIAN OF PUBLIC RECORDS AT (386) 878-8100, jraftery@deltonafl.gov, 2345 Providence Blvd., Deltona, Florida 32725.

Article 6. General Conditions

6.1 This Agreement is made under, and in all respects shall be interpreted, construed, enforced, and governed by and in accordance with, the laws of the State of Florida. Venue for any legal action resulting from this Agreement shall lie solely in Volusia County, Florida.

6.2 No modification, amendment or alteration in the terms or conditions contained herein shall be effective unless contained in a written document executed with the same formality and of equal dignity herewith. The City may make changes in the services at any time by giving written notice to Consultant. If such changes increase (additional services) or decrease (eliminate any amount of work) in the scope of work, City and Consultant shall modify the relevant task order through issuance of a change order. All change orders shall be authorized in writing by City prior to commencing or reducing any term of the relevant task order.

6.3 The captions utilized in this Agreement are for the purposes of identification only and do not control or affect the meaning or construction of any of the provisions hereof.

6.4 This Agreement shall be binding upon and shall inure to the benefit of each of the parties and of their respective successors and permitted assigns. Nothing in this Agreement is intended or shall be deemed to confer any rights or benefits upon any entity or person other than the parties hereto or to make or render any such other entity or person a third-party beneficiary of this Agreement.

6.5 This Agreement may not be amended, released, discharged, rescinded or abandoned, except by a written instrument duly executed by each of the parties hereto.

6.6 The failure of any party hereto at any time to enforce any of the provisions of this Agreement will in no way constitute or be construed as a waiver of such provision or of any other provision hereof, nor in any way affect the validity of, or the right thereafter to enforce, each and every provision of this Agreement.

6.7 During the term of this Agreement Consultant assures City that it is in compliance with Title VII of the 1964 Civil Rights Act, as amended, and the Florida Civil Rights Act of 1992, in that Consultant does not on the grounds of race, color, national origin, religion, sex, age, disability or marital status, discriminated in any form or manner against Consultant employees or applicants for employment. Consultant understands and agrees that this Agreement is conditioned upon the veracity of this statement of assurance.

Article 7. Severability

7.1 The invalidity or unenforceability of any particular provision of this Agreement shall not affect the other provisions hereof, and this Agreement shall be construed in all respects as if such invalid or unenforceable provisions were omitted.

7.2 Wherever provision is made in this Agreement for the giving, service or delivery of any notice, statement or other instrument, such notice shall be in writing and shall be deemed to have

been duly given, served and delivered, if delivered by hand or mailed by United States registered or certified mail or sent by facsimile, addressed as follows:

If to Consultant:	If to City:
Andrew Burnham	Matt Doan
Director	Deputy Public Works Director
777 South Harbour Island Bldv, Suite 600	City of Deltona
Tampa, Florida 33602	2345 Providence
	Blvd. Deltona,
	Florida 32725

Each party hereto may change its mailing address by giving to the other party hereto, by hand delivery, United States registered or certified mail notice of election to change such address.

Article 8. Scope of Agreement

8.1 This Agreement is intended by the parties hereto to be the final expression of their Agreement, and it constitutes the full and entire understanding between the parties with respect to the subject hereof, notwithstanding any representations, statements, or agreements to the contrary heretofore made.

IN WITNESS WHEREOF, the parties hereto have made and executed this Agreement for the purposes stated herein.

ATTEST:

_____
Secretary

(CORPORATE SEAL)

CONSULTANT:

_____
President

_____
Date

ATTEST:

_____

JOYCE RAFTERY
City Clerk

CITY OF DELTONA

_____

JANE SHANG
City Manager

_____
Date

Approved as to Form and Legality:

_____
GRETCHEN R.H. VOSE
City Attorney

HAWKSLEY CONSULTING

BURTON & ASSOCIATES
a subsidiary of Hawksley Consulting

November 16, 2016

As you may know, Burton & Associates was recently acquired by Hawksley Consulting. The acquisition was a stock sale, and as such, Burton & Associates is still an authorized Florida corporation and will continue to operate under its existing name for a period of time. **As such, all payments for services under contracts with Burton & Associates should continue to be remitted to Burton & Associates.**

However, as part of the transition, there will be some very minor changes to our invoicing process and information requirements going forward that we wanted to highlight. Beginning with our next billing cycle, there will be a change in the mailing address for payments as well as the format of our invoices (see attached example). Finally, we are now requiring the Federal Tax Payer ID number of our clients. As such, please complete the W-9 Form included herein at your earliest convenience and send to us via email to bprecourt@burtonandassociates.com or via fax to 813-443-8289.

As you review the information included herein, please let us know if you have any questions regarding the changes to our invoicing process and information requirements, or the acquisition in general. We sincerely appreciate the opportunity to be of service and welcome the opportunity to talk about the enhanced resources and additional services the acquisition allows us to offer.

Very Sincerely Yours,

Michael Burton
Burton & Associates, Inc.
St. Augustine Office: (904) 247-0787
Mobile: (904) 923-1466

Andrew Burnham
Burton & Associates, Inc.
Tampa Office: (813) 443-5138
Mobile: (904) 631-5109

City of Deltona

2345 Providence Blvd.
Deltona, FL 32725

Agenda Memo

AGENDA ITEM: E.

TO: Mayor and Commission

AGENDA DATE: 12/12/2016

FROM: Jane K. Shang, City Manager

AGENDA ITEM: 8 - E

SUBJECT:
Annual Renewal of STD/LTD Plans

LOCATION:
City Wide

BACKGROUND:
Short Term Disability and Long Term Disability plans are up for annual renewal. Rates have not changed in 3 years. Recent claims history has dictated a rate change to the Short Term Disability rates.

COST:
Approximately $41,000 for the year based on current enrollment.

SOURCE OF FUNDS:
General Fund

ORIGINATING DEPARTMENT:
Human Resources, Richard Adams, SPHR, SHRM-SCP 386-878-8752

STAFF RECOMMENDATION PRESENTED BY:
Human Resources, Richard Adams, SPHR, SHRM-SCP 386-878-8752

POTENTIAL MOTION:
Move to approve the renewal rates for Short Term Disability and Long Term Disability plans for 2017.

powered by Legistar™

Sylvia Summers
Regional Account Manager
Telephone: 610.758.7743
Email: Sylvia.Summers@cigna.com

Gene Gizzi
Gene Gizzi Insurance Services
RE: City of Deltona. – February 1, 2017 – Group Insurance Renewal

Dear Gene,

Thank you for allowing Cigna Group Insurance to provide the Disability benefits for the employees of City of Deltona. We appreciate the opportunity to serve you both and assist in meeting your employee benefits needs.

Based on our analysis of the group's demographics, current plans, and rates we have determined a rate increase is necessary to strengthen the financial stability of the Basic STD and Basic LTD plans moving forward.

Below is an overview of our renewal position, effective February 1, 2017:

Plan	Policy	Current Rate	Rate Basis	Renewal Rate	Rate Guarantee
Basic STD	LK0963445	$0.225	Per $10 Weekly Benefit	$0.442	11 Months
Basic LTD	LK0751226	$0.215	Per $100 Covered Payroll	$0.215	11 Months

Please respond via email with your acceptance of the above rates. Thirty days prior to the above renewal date we will proceed with processing the amendments. **Remember to update your premium reporting to reflect the new rates, and begin payment at the new rates, as of the renewal date listed above, to constitute active acceptance.**

Cigna reserves the right to change premium rates if any of the following occurs:

- The policy terms change
- A division, subsidiary, eligible company, or class is added/deleted
- There is a change of more than 10% in the number of employees

We value our relationship with you and look forward to continuing this partnership.

Cigna is pleased to offer you pre-disability vocational services as standard feature along with your long-term disability policy. Pre-disability vocational services is a voluntary service feature of Cigna's Healthy Working Life™ program of vocational services to assist insured, actively at work employees with a serious medical condition to remain productive and at work, while also helping them manage limitations that may be associated with their condition.

There is no cost to the policyholder for this enhancement which provides for approved stay-at-work expenses of up to $1,000 per employee per diagnostic event. A Schedule of Services delineating the details for this offering accompanies this letter, and if you currently are not receiving these services, here is the link to the client orientation website for this program www.cigna.com/predisability where you will also obtain all the information, tools and forms you need to use the service and make referrals.

Should you have any questions regarding this renewal position or any other matters, please do not hesitate to call me.

Thank you,

Sylvia Summers
Regional Account Manager

"Cigna" is a registered service mark, and ," the "Tree of Life" logo is a service mark, of Cigna Intellectual Property, Inc., licensed for use by Cigna Corporation and its operating subsidiaries. All products and services are provided exclusively by such operating subsidiaries and not by Cigna Corporation. Such operating subsidiaries include Connecticut General Life Insurance Company (CGLIC), Cigna Health and Life Insurance Company (CHLIC), and HMO or service company subsidiaries of Cigna Health Corporation and Cigna Dental Health, Inc

Richard Adams

From: Gene Gizzi <genegizzi@cfl.rr.com>
Sent: Tuesday, November 15, 2016 3:57 PM
To: Richard Adams
Subject: LTD & STD Renewal

Rich,

- The Firefighters LTD rates remain unchanged through calendar year 2017.
- The STD rates are changing from $0.225 per $10 of weekly benefit to $0.442 per $10 of weekly benefit.

Because Cigna renewal was delivered late in the process, they agreed to hold the renewal increase until February 1st, with premiums guaranteed through December 31, 2017. These rates have been adjusted to reflect 0% commissions.

Assuming current enrollment, the impact on the City will be $41,361 for calendar year 2017.

Gene Gizzi, REBC, RHU, ChHC
Gene Gizzi Insurance Services
(386) 575-2555

City of Deltona

Short Term Disability

LK 0751226

As Of 10/21/2016

Claims Reported on an Paid Basis

Birth Date	Gender	Date of Disability	Coverage Status	Benefit
3/11/1976	M	9/25/2016	PM	637
9/11/1984	F	9/23/2016	CC	714
7/30/1960	M	9/13/2016	AC	684
1/27/1957	F	9/12/2016	AC	614
7/14/1957	M	7/25/2016	AC	738
3/20/1972	M	7/23/2016	AC	355
7/30/1984	M	6/12/2016	CC	530
4/5/1964	M	5/27/2016	AC	418
10/12/1983	F	5/17/2016	CC	336
2/9/1984	M	4/16/2016	CC	494
6/17/1968	F	2/19/2016	CC	326
3/7/1957	M	1/28/2016	CC	504
5/25/1977	M	12/7/2015	CC	496
3/7/1957	M	11/11/2015	CC	504
4/5/1964	M	9/22/2015	CC	406
10/26/1980	F	9/17/2015	CC	482
2/25/1980	M	9/11/2015	CC	621
2/21/1963	M	9/10/2015	CC	514
9/21/1961	M	8/31/2015	CC	865
9/22/1952	F	7/27/2015	CC	736
3/20/1972	M	7/9/2015	CC	455
3/15/1989	M	6/28/2015	CC	385
2/14/1952	M	6/25/2015	CC	454
7/27/1948	M	5/30/2015	CC	25
3/12/1958	F	5/11/2015	CC	466
9/1/1962	F	4/1/2015	CC	427
3/11/1964	M	3/27/2015	CC	437
8/12/1963	F	3/26/2015	CC	786
6/2/1982	M	3/9/2015	CC	754
8/28/1956	M	3/4/2015	CC	978
12/4/1960	M	2/6/2015	CC	953
11/14/1948	M	1/15/2015	CC	59
3/11/1976	M	1/9/2015	CC	584
7/10/1964	M	1/2/2015	CC	387
10/8/1973	F	12/31/2014	CC	415
10/14/1985	M	11/8/2014	CC	30

Confidential, unpublished property of Cigna. Do not duplicate or distribute. Use and distribution limited solely to authorized personnel. © Copyright 2016 Cigna Corporation)

Created: 3:05 PM - 11/1/2016

Birth Date	Gender	Date of Disability	Coverage Status	Benefit
10/15/1948	M	10/21/2014	CC	336
2/14/1960	M	10/5/2014	CC	566
12/22/1977	M	9/27/2014	CC	584
6/24/1972	M	9/20/2014	CC	384
9/3/1954	M	8/26/2014	CC	978
1/9/1971	M	8/25/2014	CC	1,008
5/22/1964	F	6/24/2014	CC	837
5/25/1977	M	6/16/2014	CC	464
9/11/1984	F	5/2/2014	CC	648
9/15/1972	M	1/13/2014	CC	542
5/22/1964	F	1/3/2014	CC	837

Confidential, unpublished property of Cigna. Do not duplicate or distribute. Use and distribution limited solely to authorized personnel. © Copyright 2016 Cigna Corporation)

City of Deltona
Short Term Disability
LK 0751226
As Of 10/21/2016

Claims Reported on an Paid Basis

Period Description				Fully Revealed
Start Date	1/1/2014	1/1/2015	1/1/2016	Total
End Date	12/31/2014	12/31/2015	10/21/2016	
# of Months	12	12	10	34
Period Weight	35.3 %	35.3 %	29.4 %	100.0 %
Paid Premium	**44,085**	**45,712**	**38,864**	**128,660**
Paid Claims	**72,968**	**104,190**	**45,151**	**222,309**
IBNR	133	407	(1,712)	(1,172)
Net Incurred Claims	**73,101**	**104,597**	**43,439**	**221,137**
Paid Loss Ratio	**165.8 %**	**228.8 %**	**111.8 %**	**171.9 %**
Open/Pending Claims	-	-	6	6
Closed Claims	13	22	6	57
Total Claims	13	22	12	63

Confidential, unpublished property of Cigna. Do not duplicate or distribute. Use and distribution limited solely to authorized personnel. © Copyright 2016 Cigna Corporation)

Created: 3:05 PM - 11/1/2016

City of Deltona

2345 Providence Blvd.
Deltona, FL 32725

Agenda Memo

AGENDA ITEM: A.

TO: Mayor and Commission **AGENDA DATE:** 12/12/2016

FROM: Jane K. Shang, City Manager **AGENDA ITEM:** 9 - A

SUBJECT:
Public Hearing - Ordinance No. 28-2016, Amending Chapter 94, Impact Fees, of the Land Development Code, and the City's Impact Fee Schedule for Fire/Rescue, Parks, Transportation, and Law Enforcement, at first reading - Chris Bowley, AICP, Planning and Development Services, (386) 878-8602.

Strategic Goal: Other Priority Objectives Identified - Maintain a balanced budget, reserves, and investments.

LOCATION:
City-wide

BACKGROUND:
Chapter 163.31801, Florida Statutes (FS), allows a local governments to levy impact fees to off-set "impacts" as a result of new growth. Specifically, the statutes list that impact fees are *"to use in funding the infrastructure necessitated by new growth. The Legislature further finds that impact fees are an outgrowth of the home rule power of a local government to provide certain services within its jurisdiction."* The statute requires local governments to provide *"notice no less than 90 days before the effective date of an ordinance or resolution imposing a new or increased impact fee."* The second and final reading of the ordinance will comply with this law.

The City collects impact fees for increased intensity of land uses and has had moratoriums in the past to help businesses locate or expand within the City. With economic recovery, the City updated its impact fees for parks, fire rescue, law enforcement, and transportation fees (water and sewer impact fees are within Deltona Water). In 2007, the City had an impact fee study completed that created an extensive list of land uses and fees. Some development applications did not always match that adopted land use list. The series of adoptions of fees is included in the composite attachment (see attached).

In 2015, the City contracted Burton & Associates (Burton) to revisit the adopted impact fees and to create a simplified uniform land use list that reflects Deltona's land use pattern. The impact fees for fire/rescue and law enforcement were found to be comparable to local communities similar to Deltona and are recommended for adoption. The existing parks impact fee is higher than comparative communities and Burton recommends keeping the current parks fee. The proposed transportation impact fees from Burton for some land use categories is higher. The City Commission directed staff to revisit those fees and a comparative analysis was performed. The recommended impact fee schedule within the attached Ordinance No. 28-2016 is the result of that analysis. Where the Burton

transportation fee was higher that average, the City's current fee is recommended to be kept for economic development. It is also recommended that City impact fees be reviewed at least every five (5) years to remain current and to minimize large increases. Finally, the Planning & Zoning Board reviewed Ordinance No. 28-2016 on November 16, 2016, and voted 5-0 (two members absent) for the City Commission to adopt the ordinance.

COST:
N/A

SOURCE OF FUNDS:
N/A

ORIGINATING DEPARTMENT:
Planning and Development Services

STAFF RECOMMENDATION PRESENTED BY:
Chris Bowley, AICP, Director, Planning and Development Services - Staff recommends that Ordinance No. 28-2016 be approved by the City Commission, at first reading.

POTENTIAL MOTION:
"I hereby move to approve Ordinance No. 28-2016, Amending Chapter 94, Impact Fees, of the Land Development Code, and the City's Impact Fee Schedule for fire/rescue, parks, transportation, and law enforcement, at first reading."

ORDINANCE NO. 28-2016

AN ORDINANCE OF THE CITY OF DELTONA, FLORIDA, AMENDING THE CODE OF THE CITY OF DELTONA BY PROVIDING FOR STATUTORY COMPLAINCE; PROVIDING THAT IMPACT FEES BE SET BY ORDINANCE; AMENDING ARTICLE II AND SECTION 94-22, FIRE/RESCUE IMPACT FEE SCHEDULE, ARTICLE III AND SECTION 94-32, PARK IMPACT FEE SCHEDULE, ARTICLE IV AND SECTION 94-42, TRANSPORTATION (IMPACT FEE) SCHEDULE, AND ARTICLE V AND SECTION 94-52, LAW ENFORCEMENT IMPACT FEE SCHEDULE; PROVIDING FOR CONFLICTS; SEVERABILITY; CODIFICATION; AND AN EFFECTIVE DATE.

WHEREAS, the City of Deltona, Florida, desires to update its impact fee ordinance in full compliance with statutory requirements; and

WHEREAS, the City of Deltona desires to update Appendix A, Fee Schedule, of the City's Code of Ordinances, with regulations governing City impact fees listed in Chapter 94, of the City's Land Development Code that includes fire/rescue, parks, transportation, and law enforcement impact fees; and

WHEREAS, the City of Deltona shall assess impact fees per Section 163.31801, Florida Statutes and provide scheduled adjustments to ensure that adequate public facilities and services are provided to the community in a timely manner; and

WHEREAS, the City of Deltona has ensured that the calculation of the impact fee is based on the most recent, localized, and/or best available data source.

NOW, THEREFORE, BE IT RESOLVED BY THE CITY COMMISSION OF THE CITY OF DELTONA, FLORIDA, as follows:

Section 1. A new Section 94-17, "Statutory compliance," of Chapter 94, "Impact Fees," is hereby amended to read:

Sec. 94-17. – Statutory compliance.

In accordance with Florida Statutes, Section 163.31801, the "Florida Impact Fee Act," all impact fees of the City of Deltona shall:

(a) Be calculated based upon most recent and localized data;
(b) Provide for accounting and reporting of impact fee collections and expenditures for revenues and expenditures of impact fees in a separate accounting fund;
(c) Limit administrative charges for the collection of impact fees to actual costs;
(d) Require that notice be provided no less than 90-days before the effective date of an ordinance imposing a new or increased impact fee; provided that a 90-day wait shall not be required to decrease, suspend, or eliminate an impact fee; and
(e) Audits of financial statements are performed by a certified public accountant pursuant to Florida Statutes, Section 218.39 and submitted to the Auditor General that include an affidavit signed by the Finance Director stating that the City of Deltona has complied with Florida Statutes, Section 163.31801.

Section 2. Section 94-22, "Fire/rescue impact fee schedule," of Article II, "Fire/Rescue Impact Fee," of Chapter 94, "Impact Fees," is hereby amended to read:

Sec. 94-22. – Fire/rescue impact fee schedule.

The fire/rescue impact fee schedule is as established by ordinance of the city commission as set forth in ~~the~~ Appendix A: Fire/rescue Impact Fee Schedule, as provided in amended Section "Chapter 94, Impact Fees Table 94-1: City of Deltona Impact Fee Schedule for Fire/Rescue, Park, Transportation, and Law Enforcement."

Section 3. Section 94-32, "Park impact fee schedule," of Article III, "Park Impact Fee," of Chapter 94, "Impact Fees," is hereby amended to read:

Sec. 94-32. – Park impact fee schedule.

The park impact fee schedule is as established by ordinance of the city commission as set forth in ~~the~~ Appendix A: Park Impact Fee Schedule, as provided in amended Section "Chapter 94, Impact Fees Table 94-1: City of Deltona Impact Fee Schedule for Fire/Rescue, Park, Transportation, and Law Enforcement."

Section 4. Section 94-42, "Transportation schedule," of Article IV, "Transportation Impact Fee," of Chapter 94, "Impact Fees," is hereby amended to read:

Sec. 94-42. – Transportation impact fee schedule.

The transportation impact fee schedule is as established by ordinance of the city commission as set forth in ~~the~~ Appendix A: Transportation Impact Fee Schedule, as provided in amended Section "Chapter 94, Impact Fees Table 94-1: City of Deltona Impact Fee Schedule for Fire/Rescue, Park, Transportation, and Law Enforcement."

Section 5. Section 94-52, "Law enforcement impact fee schedule," of Article V, "Law Enforcement Impact Fee," of Chapter 94, "Impact Fees," is hereby amended to read:

Sec. 94-52. – Law enforcement impact fee schedule.

The law enforcement impact fee schedule is as established by ordinance of the city commission as set forth in ~~the~~ Appendix A: Law Enforcement Impact Fee Schedule, as provided in amended Section "Chapter 94, Impact Fees Table 94-1: City of Deltona Impact Fee Schedule for Fire/Rescue, Park, Transportation, and Law Enforcement."

Section 6. Conflicts. Any and all Ordinances or parts of Ordinances in conflict herewith are hereby repealed and replaced, including and not limited to the existing impact fees listed in Appendix A, of the Code of Ordinances, City of Deltona, Florida, entitled "Fee Schedule", Section "Chapter 94, Impact Fees", Table 94-1, "Fire/Rescue, Law Enforcement and Park Impact Fees" of City of Deltona Resolution No. 2006-47, and Table 94-2, "Transportation Impact Fees" of City of Deltona Resolution No. 2014-32 with the following Appendix A, Table 94-1, Impact Fees Table 94-1: City of Deltona Impact Fee Schedule for Fire/Rescue, Park, Transportation, and Law Enforcement:

Appendix A
Table 94-1: City of Deltona Impact Fee Schedule for Fire/Rescue, Park, Transportation, and Law Enforcement

Land Use	Impact Fee Unit	Fire/ Rescue	Park	Transportation	Law Enforcement
Single Family Use (Residential)	1,000 SF	$123.00	-	-	$63.00
	DU	-	$1,539.90	$1,044.00	-
Multi-Family Use (Residential)	1,000 SF	$123.00	-	-	$63.00
	DU	-	$830.50	$888.00	-
Hotel/Motel	1,000 SF	$123.00	-	-	$63.00
	Room	-	-	$1,029.00	-
Office	1,000 SF	$123.00	-	$1,638.00	$63.00
Hospital/Medical Office/Clinic/ALF	1,000 SF	$123.00	-	$1,530.00	$63.00
Automobile Station (Types A&C Gas Station/Convenience Store)	1,000 SF	$123.00	-	$6,968.00	$63.00
Automobile Station (Type B Auto Care/Repair Center)	1,000 SF	$123.00	-	$1,960.00	$63.00
Retail	1,000 SF	$123.00	-	$2,075.00	$63.00
Restaurant (Type A Sit-Down)/Bars	1,000 SF	$123.00	-	$4,826.00	$63.00
Restaurant (Type B Drive-Thru)	1,000 SF	$123.00	-	$14,461.00	$63.00
Banks/Financial Institutions	1,000 SF	$123.00	-	$7,005.00	$63.00
Movie Theaters	1,000 SF	$123.00	-	-	$63.00
	Screen	-	-	$4,621.00	-
Industrial/Utilities	1,000 SF	$123.00	-	$1,308.00	$63.00
Storage/Warehouse/Flex Space	1,000 SF	$123.00	-	$449.00	$63.00
Recreation/Fitness Center (Private)	1,000 SF	$123.00	-	$2,075.00	$63.00
Civic/Institutional/Church	1,000 SF	$123.00	-	$698.00	$63.00
Daycare	1,000 SF	$123.00	-	$2,416.00	$63.00

Section 7. Severability. If any provision of this Ordinance or the application thereof to any person or circumstance is held invalid, such invalidity shall not affect any other provision or application of this Ordinance which can be given effect without the invalid provision or application.

Section 8. Codification. The provisions of this Ordinance shall be codified as and be made a part of the Code of Ordinances of the City of Deltona. The sections of this Ordinance may be renumbered or relettered to accomplish such intention.

Section 9. Effective Date. This Ordinance shall take effect ninety (90) days after its final adoption by the City Commission.

PASSED AND ADOPTED BY THE CITY COMMISSION OF THE CITY OF DELTONA, FLORIDA THIS _____ DAY OF _____ 2017.

BY: _____
JOHN C. MASIARCZYK, SR., Mayor

ATTEST:

_____
JOYCE RAFTERY, City Clerk

Approved as to form and legality for use
and reliance of the City of Deltona, Florida

_____
GRETCHEN R. H. VOSE, City Attorney

Land Use	Impact Fee Unit	Fire/ Rescue	Law Enforcement	Park & Recreation	Transportation (Ord #28-2016)	Transportation (Burton)
Single Family Use (Residential)	**1,000 SF**	**$123.00**	**$63.00**			
	DU	*$214.49*	*$116.30*	**$1,539.90**	**$1,044.00**	$1,924.00
	DU			*$1,556.21*	*Varies by SF*	
Multi-Family Use (Residential)	**1,000 SF**	**$123.00**	**$63.00**			
	DU			**$830.50**	**$888.00**	$888.00
Condo/Townhouse	DU	*$242.17*	*$131.30*	*$1,760.21*	*$801.00*	
Apartment	DU	*$116.24*	*$63.03*	*$839.30*	*$774.00*	
Mobile Home	DU	*$188.20*	*$102.04*	*$1,363.87*	*$435.00*	
Hotel/Motel	**1,000 SF**	**$123.00**	**$63.00**		*Varies by SF*	
	Room	*$88.56*	*$48.02*		**$1,029.00**	$1,029.00
Nursing Home/ACLF	Bed	*$132.84*	*$72.03*		*$123.00*	
Office	**1,000 SF**	**$123.00**	**$63.00**		**$1,638.00**	$7,764.00
10,000 SF or less	1,000 SF	*$333.50*	*$180.82*		*Varies by SF*	
Greater than 10,000 SF	1,000 SF	*$196.50*	*$106.54*		*Varies by SF*	
Hospital/Medical Office/Clinic/ALF	**1,000 SF**	**$123.00**	**$63.00**		**$1,530.00**	$4,393.00
Hospital	1,000 SF	*$228.33*	*$123.80*		*$1,530.00*	
Medical Office/Clinic	1,000 SF	*239.40*	*$129.80*		*$3,515.00*	
Automobile Station (Types A & C Gas Station/Convenience Store)	**1,000 SF**	**$123.00**	**$63.00**		**$6,968.00**	$23,805.00
Convenience Store	1,000 SF	*$586.73*	*$318.13*		*$3,980.00*	
Convenience Store w/ Gas Pumps	1,000 SF	*$867.64*	*$470.44*		*$6,968.00*	
Convenience/Gas/Fast Food	1,000 SF	*$989.42*	*$536.46*		*$18,338.00*	
Gas Station w/ Conv Market	1,000 SF	*$157.75*	*$85.53*		*$2,075.00*	
Automobile Station (Type B Auto Care/Repair Center)	**1,000 SF**	**$123.00**	**$63.00**		**$1,960.00**	$4,206.00
Quick Lube	Bay	*$160.52*	*$87.03*		*$1,269.00*	
Auto Parts Sales	1,000 SF	*$258.77*	*$140.31*		*$2,075.00*	
Auto Repair/Body Shop	1,000 SF	*$441.43*	*$239.35*		*$1,960*	
Tire Store	1,000 SF	*$478.79*	*$259.60*		*$1,311.00*	
Retail	**1,000 SF**	**$123.00**	**$63.00**		**$2,075.00**	$5,803.00
Less than 10,000 GSF	1,000 SF	*$606.10*	*$328.63*		*Varies by SF*	
10,000 GSF to 99,999 GSF	1,000 SF	*$401.30*	*$217.59*		*Varies by SF*	
100,000 GSF to 1,000,000 GSF	1,000 SF	*$250.47*	*$135.80*		*Varies by SF*	
Greater than 1,000,000 GSF	1,000 SF	*$254.62*	*$138.06*		*Varies by SF*	

Land Use	Impact Fee Unit	Fire/ Rescue	Law Enforcement	Park & Recreation	Transportation (Ord #28-2016)	Transportation (Burton)
Pharmacy/Rx Store w/ Drive-thru	1,000 SF	*$260.15*	*$141.06*		*$1,420.00*	
Home Improvement Superstore	1,000 SF	*$246.32*	*$133.35*		*$1,419.00*	
Supermarket	1,000 SF	*$280.91*	*$152.31*		*$2,633.00*	
New & Used Car Sales	1,000 SF	*$239.40*	*$129.80*		*$2,644.00*	
Furniture Store	1,000 SF	*$44.28*	*$24.01*		*$373.00*	
CBD Sandwich Shop	1,000 SF	*N/A*	*N/A*		*$582.00*	
Restaurant (Type A Sit-Down)/Bars	**1,000 SF**	**$123.00**	**$63.00**		**$4,826.00**	$10,116.00
Quality	1,000 SF	*$936.83*	*$507.95*		*$4,826.00*	
High-Turnover	1,000 SF	*$981.11*	*$531.96*		*$5,587.00*	
Restaurant (Type B Drive-thru)	**1,000 SF**	**$123.00**	**$63.00**		**$14,461.00**	$24,753.00
Fast Food w/ Drive-thru	1,000 SF	*$1,210.83*	*$656.51*		*$14,461.00*	
Banks/Financial Institutions	**1,000 SF**	**$123.00**	**$63.00**		**$7,005.00**	$22,779.00
With Savings/Walk-ins	1,000 SF	*$296.13*	*$160.56*		*$3,878.00*	
With Savings/Drive-thru	1,000 SF	*$239.40*	*$129.80*		*$7,005.00*	
Movie Theaters	**1,000 SF**	**$123.00**	**$63.00**			$7,311.00
Movie Theater with Matinee	**Screen**	*$1,190.07*	*$645.26*		**$4,621.00**	
Industrial/Utilities	**1,000 SF**	**$123.00**	**$63.00**		**$1,308.00**	$1,308.00
Light Industrial/Industrial Park	1,000 SF	*$95.48*	*$51.77*		*$721.00*	
Business Park	1,000 SF	*$138.38*	*$75.03*			
Manufacturing	1,000 SF	*$69.19*	*$37.52*		*$403.00*	
Storage/Warehouse/Flex Space	**1,000 SF**	**$123.00**	**$63.00**		**$449.00**	$449.00
Warehouse	1,000 SF	*$53.97*	*$29.26*		*$517.00*	
Mini-Warehouse	1,000 SF	*$9.69*	*$5.25*		*$157.00*	
Recreation/Fitness Center (Private)	**1,000 SF**	**$123.00**	**$63.00**		**$2,075.00**	$9,266.00
City Park	Acre	*$11.25*	*$11.25*		*$89.00*	
County Park	Acre	*$27.68*	*$15.01*		*$238.00*	
RV Park	Site	*$89.95*	*$48.77*			
Major Sports Facility (Arena)	Acre	*$593.65*	*$321.88*		*$3,368.00*	
Racquet Club/Health Club	1,000 SF	*$427.59*	*$231.84*		*Varies by SF*	
Civic/Institutional/Church	**1,000 SF**	**$123.00**	**$63.00**		**$698.00**	$4,246.00
Church	1,000 SF	*$78.88*	*$42.77*		*$698.00*	
Daycare	**1,000 SF**	**$123.00**	**$63.00**		**$2,416.00**	$23,741.00
Daycare Center	1,000 SF	*$130.08*	*$70.53*		*$2,416.00*	

Notes:

1. *Existing City impact fees and land uses provided in italics.*
2. *Proposed impact fees and units are listed in bold.*
3. *Land uses provided by Burton and defined in City Land Development Code.*
4. *Land uses reflect existing City land use pattern.*
5. *Burton land uses simplifies list and provides common unit of measurement.*
6. *For transportation fees, if not Burton fee, City adopted fee used that is based on land use pattern.*
7. *Park & Recreation fees only assessed for residential land uses.*
8. *Where "Varies by SF" listed, refer to adopted City fee schedule.*

CITY OF DELTONA

IMPACT FEE SCHEDULE

		RESOLUTION NO. 2006-47			RESOLUTION NO. 2014-32
Land Use	**Impact Unit**	**Fire Rescue Impact Fee**	**Law Enforcement Impact Fee**	**Park Impact Fee**	**Transportation Impact Fee**
RESIDENTIAL					
Single Family	dwelling	$214.49	$116.30	$1,556.21	0 to 1,500 sf $761.00 1,501 to 2,499 sf $1,044.00 2,500 sf and greater $1,179.00
Residential Condo/Townhouse	dwelling	$242.17	$131.30	$1,760.21	$801.00
Multi Family/Apartment	dwelling	$116.24	$63.03	$839.30	$774.00
Mobile Home	dwelling	$188.20	$102.04	$1,363.87	$435.00
TRANSIENT, ASSISTED, GROUP					
Hotel/Motel	room	$88.56	$48.02	---	Hotel $752.00 Motel $409.00
Nursing Home/ACLF	bed	$132.84	$72.03	---	$123.00
RECREATIONAL					
General Recreation/City Park	acre	$20.76	$11.25	---	$89.00
General Recreation/County Park	acre	$27.68	$15.01	---	$238.00
RV Park	site	$89.95	$48.77	---	
Major Sports Facility (Arena)	acre	$593.65	$321.88	---	$3,368.00
Movie Theater with Matinee	screen	$1,190.07	$645.26	---	$4,621.00
Racquet Club/Health Club/Spa/Dance Studio	1,000 sf	$427.59	$231.84	---	under 50,000 GSF $2,075.00 50,001 - 200,000 GSF $2,147.00 200,001 - 400,000 GSF $1,860.00 401,000 - 600,000 GSF $1,772.00 600,001 - 800,000 GSF $1,669.00 greater than 800,000 GSF $1,829.00
INSTITUTIONS					
Hospital	1,000 sf	$228.33	$123.80	---	$1,530.00
Day Care Center	1,000 sf	$130.08	$70.53	---	$2,416.00
Church	1,000 sf	$78.88	$42.77	---	$698.00

This document is for informational purposes only.

		RESOLUTION NO. 2006-47			RESOLUTION NO. 2014-32	
Land Use	**Impact Unit**	**Fire Rescue Impact Fee**	**Law Enforcement Impact Fee**	**Park Impact Fee**	**Transportation Impact Fee**	
OFFICE						
Office 10,000 SF or less	1,000 sf	$333.50	$180.82	---	50,000 sf or less 50,001 - 100,000 sf	$1,638.00 $1,493.00
Office greater than 10,000 SF	1,000 sf	$196.50	$106.54	---	100,001 - 200,000 sf 200,001 - 400,000 sf greater than 400,000 sf	$1,268.00 $1,079.00 $919.00
Corporate Headquarters Building	1,000 sf			---		$847.00
Medical Office/ Clinic	1,000 sf	$239.40	$129.80	---	Medical Office	$3,515.00
RETAIL, Gross Square Feet						
Retail less than 10,000 GSF	1,000 sf	$606.10	$328.63	---	under 50,000 GSF	$2,075.00
Retail 10,000 GSF to 99,999 GSF	1,000 sf	$401.30	$217.59	---	50,001 - 200,000 GSF 200,001 - 400,000 GSF	$2,147.00 $1,860.00
Retail 100,000 GSF to 1,000,000 GSF	1,000 sf	$250.47	$135.80	---	401,000 - 600,000 GSF 600,001 - 800,000 GSF	$1,772.00 $1,669.00
Retail over 1,000,000 GSF	1,000 sf	$254.62	$138.06	---	greater than 800,000 GSF	$1,829.00
Pharmacy/Drug Store w/Drive-Thru	1,000 sf	$260.15	$141.06	---		$1,420.00
Home Improvement Superstore	1,000 sf	$246.32	$133.55	---		$1,419.00
Quality Restaurant	1,000 sf	$936.83	$507.95	---		$4,826.00
High-Turnover Restaurant	1,000 sf	$981.11	$531.96	---		$5,587.00
Fast Food Rest w/Drive-Thru	1,000 sf	$1,210.83	$656.51	---		$14,461.00
Quick Lube	bay	$160.52	$87.03	---		$1,269.00
Automobile Parts Sales	1,000 sf	$258.77	$140.31	---		$2,075.00
Supermarket	1,000 sf	$280.91	$152.31	---		$2,633.00
Convenience Store	1,000 sf	$586.73	$318.13	---		$3,980.00
Convenience Store w/Gas Pumps	1,000 sf	$867.64	$470.44	---		$6,968.00
Convenience/Gas/Fast Food	1,000 sf	$989.42	$536.46	---		$18,338.00
Auto Repair or body Shop	1,000 sf	$441.43	$239.35	---		$1,960.00
Gas Station w/Convenience Market	fuel position	$157.75	$85.53	---		$2,075.00
Tire Store	1,000 sf	$478.79	$259.60	---	bays	$1,311.00
New and Used Car Sales	1,000 sf	$239.40	$129.80	---		$2,644.00
Furniture Store	1,000 sf	$44.28	$24.01	---		$373.00
CBD Sandwich Shop	1,000 sf.			---		$582.00

This document is for informational purposes only.

		RESOLUTION NO. 2006-47			RESOLUTION NO. 2014-32
Land Use	**Impact Unit**	**Fire Rescue Impact Fee**	**Law Enforcement Impact Fee**	**Park Impact Fee**	**Transportation Impact Fee**
Bank/Savings Walk-in	1,000 sf	$296.13	$160.56	---	$3,878.00
Bank/Savings Drive-in	1,000 sf	$239.40	$129.80	---	$7,005.00
INDUSTRIAL					
General Light Industrial/ Industrial Park	1,000 sf	$95.48	$51.77	---	$721.00
Business Park	1,000 sf	$138.38	$75.03	---	based on building use
Manufacturing	1,000 sf	$69.19	$37.52	---	$403.00
Warehouse	1,000 sf	$53.97	$29.26	---	$517.00
Mini-Warehouse	1,000 sf	$9.69	$5.25	---	$157.00

This document is for informational purposes only.

City of Deltona, FL

FY 2015 Impact Fee Study

Law Enforcement
Fire/Rescue
Parks and Recreation
Transportation

Final Report

September 30, 2015

Prepared by:

BURTON & ASSOCIATES
UTILITY RATES ▪ ASSESSMENTS ▪ FINANCIAL PLANNING

TABLE OF CONTENTS

SECTION 1. INTRODUCTION 1

1.1 BACKGROUND 1
1.2 LEGAL REQUIREMENTS 1
1.3 OBJECTIVES 3
1.4 GENERAL METHODOLOGY 4

SECTION 2. LAW ENFORCEMENT IMPACT FEES 5

2.1 COST BASIS 5
2.2 RESULTS 6
2.2.1 Impact Fee Calculation 6
2.2.2 Law Enforcement Impact Fee Survey 8
2.3 CONCLUSIONS AND RECOMMENDATIONS 10

SECTION 3. FIRE/RESCUE IMPACT FEES 11

3.1 COST BASIS 11
3.2 RESULTS 12
3.2.1 Impact Fee Calculation 12
3.2.2 Fire/Rescue Impact fee Survey 14
3.3 CONCLUSIONS AND RECOMMENDATIONS 16

SECTION 4. PARKS AND RECREATION IMPACT FEES 17

4.1 COST BASIS & LEVEL OF SERVICE STANDARDS 17
4.2 RESULTS 21
4.2.1 Impact Fee Amounts 21
4.2.2 Parks and Recreation Fee Survey 23
4.3 CONCLUSIONS AND RECOMMENDATIONS 24

SECTION 5. TRANSPORTATION IMPACT FEES 25

5.1 COST BASIS & LEVEL OF SERVICE STANDARDS 25
5.2 IMPACT FEE CALCULATION 27
5.3 TRANSPORTATION IMPACT FEE SURVEY 34
5.4 CONCLUSIONS AND RECOMMENDATIONS 36

SECTION 6. SURVEY OF ALL IMPACT FEES 37

SECTION 1. INTRODUCTION

Burton & Associates has completed an impact fee Study (Study) for the City of Deltona (City). This report presents the comprehensive results of the Study, including background information, legal requirements, an explanation of the calculation methodology employed, results of the analysis, as well as a comparative impact fee survey.

1.1 BACKGROUND

Impact fees are assessed against new development in an attempt to cover the cost of providing capital facilities (infrastructure) needed to serve new development. Such charges are the mechanism by which new growth can "pay its own way" and minimize the extent to which existing residents must bear the cost of new or expanded facilities, which are necessitated by new residents. Impact fees are capital cost recovery fees and are commonly referred to as impact fees, capacity fees, and development fees. For the purposes of this report, the use of the terms impact fees, capacity fees, development fees, or connection charges is interchangeable with impact fees.

The City currently charges impact fees for Law Enforcement, Fire/Rescue, Parks & Recreation, and Transportation. These impact fees were designed in 2005 by Tindale-Oliver & Associates, Inc. It should be noted that the City also charges impact fees for the Water and Sewer utility systems; however, this study is only for Law Enforcement, Fire/Rescue, Parks & Recreation and Transportation impact fees. As an industry best practice, the impact fee cost basis should be updated once every 5 years. The City, recognizing that the current fees are due for an update, engaged Burton & Associates to do so.

1.2 LEGAL REQUIREMENTS

Many of the legal precedents and requirements for impact fees in Florida date back to a Florida Supreme Court decision in the case of the Contractors and Builders Association

of Pinellas County versus the City of Dunedin, Florida. This case identified certain conditions to support a valid impact fee that were ultimately embodied in statutory guidelines enacted by the Growth Management Legislation passed in 1985. These legal standards require that impact fees must 1) bear a reasonable relationship to the benefit received by those who pay it, 2) must not exceed the proportional share of the cost of new facilities or services needed to serve new development and must include credits for contributions the development will make toward deferring that cost, and 3) must be earmarked and expended in such a way as to ensure that those paying the fee receive benefit from that payment.

Also, in 2006 Florida Legislature passed Senate Bill 1194 that created Section 163.31801, Florida Statutes, which has also come to be known as the "Florida Impact Fee Act". This legislation outlined additional requirements regarding the calculation and accounting of impact fees. Most notably, this legislation requires 1) that the calculation of impact fees be based upon the most recent, localized data, 2) separate reporting/accounting of impact fee revenue and expenditures in a distinct fund, 3) that the administrative charges collected in impact fees be based upon actual costs, and 4) that 90 days' notice be given prior to the effective date of an ordinance imposing or amending an impact fee.

In summary, the courts and subsequent legislation have addressed three areas associated with the development of impact fees. These areas include: 1) "fair share" allocation rules dealing with payment of impact fees by the affected property owners, 2) "rational nexus" standards, which focus on the expenditure or purpose of impact fees, and 3) "credit" allowances, which recognize offsets in the calculation of impact fees.

The "fair share" allocation rules require that an impact fee only be used for capital expenditures that are attributable to new growth. Additionally the "fair share" allocation rules recognize that the cost of facilities used by both existing customers and new development must be apportioned between the two user groups, such that the user groups are treated equally and one group does not subsidize the other.

The "rational nexus" standards require that there is a reasonable relationship between the need for capital facilities and the benefits received by new customers for which the impact fee will be expended.

There are two conditions that limit where and when impact fees can be collected and used. With respect to the first condition, although there is no specific limit as to distance between an applicant paying the impact fee and the capital expenditure to be constructed by the fee, there should be a general geographical relationship between fee collection and use. The second nexus condition recognizes that the property must receive a benefit from the service for which the impact fee is being applied. With respect to the impact fees considered in this study the facilities and equipment included are used by and constructed or purchased on behalf of all properties within the City service area, and they benefit both residential and commercial customers. Consequently, all new growth requesting capacity from the City will be subject to these impact fees.

The "credit" allowance requirements recognize that if a public agency has received property in the form of cost-free capital or if there is another revenue source that will be used for the capital expenditures necessitated by new growth, a credit should be included within the determination of the impact fees. Specifically, "credits" should be reflected as part of calculating impact fees to recognize any grants, contributions by developers, assessments, and other sources that provide funds for the same capital expenditures included in the basis of impact fees to avoid a double-recovery of costs.

1.3 OBJECTIVES

The objectives of the Study were to determine the full cost recovery impact fees for the following:

- Law Enforcement
- Fire/Rescue
- Parks & Recreation
- Transportation

Additionally, the study intends to provide a comparison of these results to the City's current impact fees, and the charges of neighboring and other generally comparable municipalities.

1.4 GENERAL METHODOLOGY

Determining impact fees for general government services is a level of service (LOS) based process. For services for which LOS standards have not been adopted, such as Law Enforcement and Fire/Rescue, the observed LOS is used as the bases for the capital costs needed to serve new growth while maintaining the current observed LOS. For services for which LOS standards have been adopted, such as Parks & Recreation and Transportation, those adopted LOS standards are used as the bases for the capital costs needed to serve new growth while maintaining the adopted LOS. In both cases the objective is to determine the costs of facilities and capital equipment necessary to serve new growth. If impact fees are not assessed, either 1) the facilities and capital equipment to serve new growth will not be constructed or acquired and the level of service provided to current properties will degrade as growth occurs, or 2) the facilities and equipment to serve new growth will be constructed or acquired but will be funded by current properties for the benefit of new growth.

SECTION 2. LAW ENFORCEMENT IMPACT FEES

This section describes the calculation of the Law Enforcement (Police) impact fees for the City. The City provides police services to all residents and businesses within the corporate limits of the City via contract with the Volusia County Sheriff's Office. Therefore, the costs eligible for inclusion in a Law Enforcement impact fee are only those capital costs incurred by the City which are necessary to provide the observed levels of service to new growth and will be recovered from all new residential and commercial growth within the City.

2.1 COST BASIS

While the City contracts police services through the County, the City has made investments in capital assets to enable the Sheriff's office to function as City police force. These assets consist of the current Sheriff's office within the City limits, as well as the City's investment in the future public safety facility. City staff has provided specific costs for the land purchase and construction of each facility used to support law enforcement within City limits. The 2015 replacement costs of these facilities are presented in the table below and that the land cost is presented at original cost:

Deltona - Law Enforcement Impact Fee
Existing Cost Basis

Existing Assets Costs		
Land Cost - Sherriff's Office	$	54,000
Building Cost - Sherriff's Office	$	189,000
Land Cost - Public Safety Facility	$	5,368,000
Pad Cost - Public Safety Facility	$	200,000
Total Existing Asset Costs	$	5,811,000

2.2 RESULTS

2.2.1 Impact Fee Calculation

To determine the impact fee amounts, the total costs identified above are divided amongst the total developed square footage in the City to determine the cost per square foot to provide the current observed level of service. Developed square footage is defined as the size or square footage of all structures and buildings developed on properties within the City. The developed square footage does not include the size of land or any vacant acreage within the City. The total existing square footage within the City was obtained using data from the Volusia County Property Appraiser. A subsequent 10% credit was then applied to the cost per square foot in the calculation of the impact fee amount to avoid double recovery of grants and other funding sources such as ad valorem taxes or other taxes/fees. In addition, a 3% reduction for allowance of estimation and contingency was included in the fee calculation. The table below presents the Law Enforcement impact fee calculation.

Deltona - Law Enforcement Impact Fee
Impact Fee Calculation

Existing Developed Sq Ft [1]			
Residential		74,963,674	
Non-Residential		5,824,870	
Total Existing Developed Sq Ft		80,788,544	
Total Costs of Existing Assets:	$	5,811,000	
Existing Asset Cost per Sq Ft	$	0.072	
Less: Credit for Grant and Other Funding	$	(0.007)	10%
Less: Allowance for Estimation/Contingency	$	(0.002)	3%
Impact Fee per Sq Ft	$	0.063	
Impact Fee per 1,000 Sq Ft	$	63.00	
Average Sq Ft per Single Family Home:		2,286	
Average SF Home Rounded to nearest 1,000 Sq Ft		2,000	
Calculated Fee for Average Single Family Home	**$**	**126.00**	
Existing Fee for Average Single Family Home	$	116.30	
$ Change	*$*	*9.70*	
% Change		*8%*	*Increase*

(1) - Developed Square Footage obtained from the Volusia County Property Appraiser

While the calculated impact fees are presented on a square footage basis, for implementation purposes the City has requested the fees be presented on a per 1,000 square foot basis. As such the proposed fee schedule is presented below by land use category.

Proposed Law Enforcement Impact Fee Schedule

Residential	Impact Fee Unit	Impact Fee
Single Family Residential	1,000 Square Feet	$63.00
Multi Family	1,000 Square Feet	$63.00
Hotel/Motel	1,000 Square Feet	$63.00
Office	1,000 Square Feet	$63.00
Hospital/Nursing Home/Clinic	1,000 Square Feet	$63.00
Gas Stations/Convenience Stores	1,000 Square Feet	$63.00
General Retail	1,000 Square Feet	$63.00
Sit-Down Restaurants/Bars	1,000 Square Feet	$63.00
Fast Food/Cafes - No Drive Thru	1,000 Square Feet	$63.00
Fast Food/Cafes - With Drive Thru	1,000 Square Feet	$63.00
Banks	1,000 Square Feet	$63.00
Movie Theaters	1,000 Square Feet	$63.00
Auto Care	1,000 Square Feet	$63.00
Industrial/Utilities	1,000 Square Feet	$63.00
Warehousing	1,000 Square Feet	$63.00
Indoor Recreation/Sports/Fitness	1,000 Square Feet	$63.00
Outdoor Recreation/Sports/Fitness	1,000 Square Feet	$63.00
Civic/Institutional	1,000 Square Feet	$63.00
Daycare	1,000 Square Feet	$63.00

It is important to note that the City has discretion regarding the percentage of cost recovery utilized in the establishment of impact fees. The impact fees can recover any amount up to, but not in excess of, the full cost recovery amounts identified herein. Adoption of impact fees at full cost recovery would lessen the pressure on taxes and other general fund revenues used to fund law enforcement facilities and equipment, thus reducing the need for funding of those facilities and equipment with general fund revenues. However, the City has discretion to adopt any amount up to 100% of the amounts identified herein.

2.2.2 Law Enforcement Impact Fee Survey

In order to provide additional information to the City regarding the calculated Law Enforcement impact fees, a comparison of the fees for the City to those of neighboring and other generally comparable municipalities was prepared. These comparisons are

presented in the table below and provide a comparison of the City's calculated Law Enforcement impact fees for a typical single-family residential home to the fees currently imposed by neighboring municipalities.

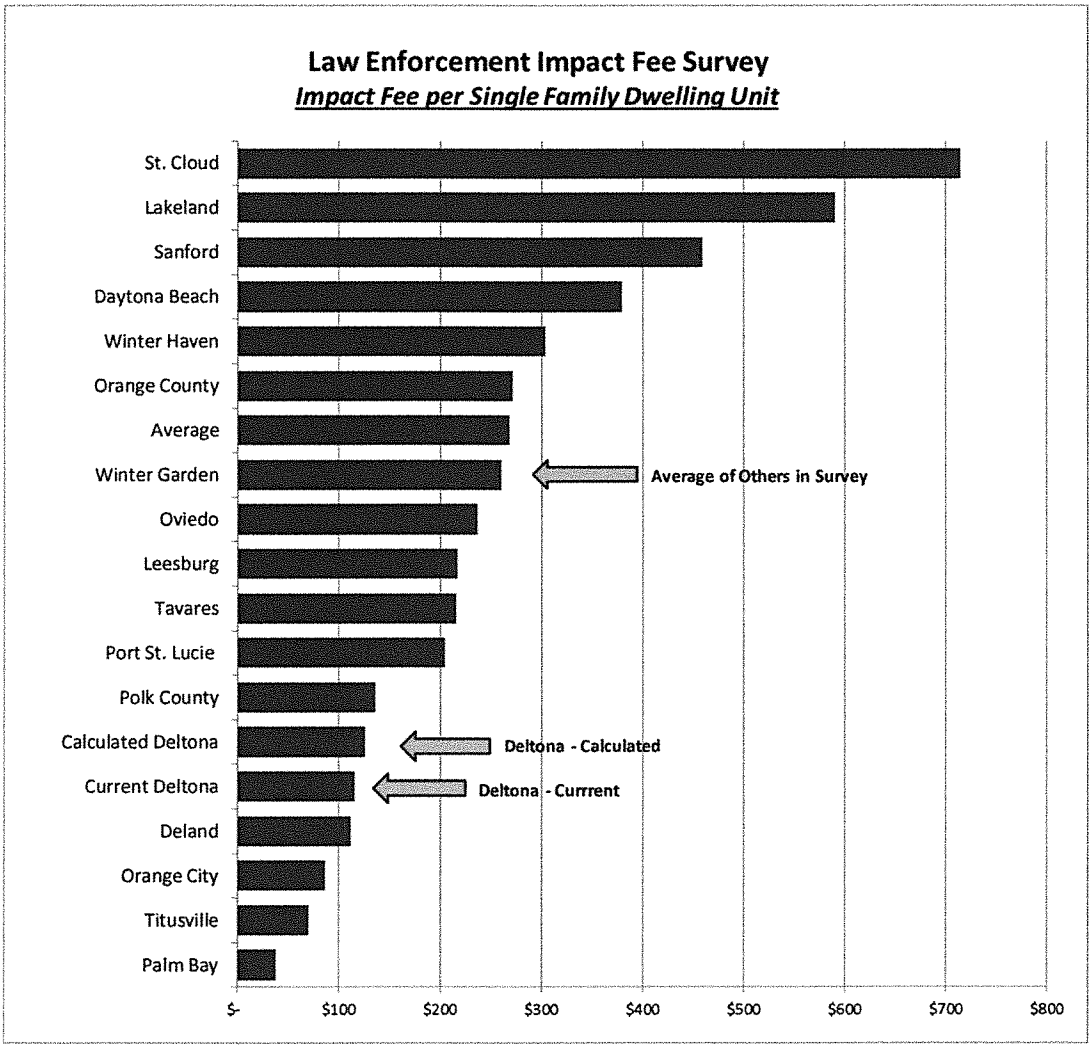

It is important to note that the reader must view the comparison with caution, as no in depth analysis has been performed to identify the methods used in the development of the impact fees imposed by the other municipalities, nor has any analysis been performed to determine whether the fees of other jurisdictions represent 100% cost recovery impact fees.

2.3 CONCLUSIONS AND RECOMMENDATIONS

The fundamental conclusions and recommendations of the Law Enforcement impact fee calculation are as follows:

- The City should adopt the calculated Law Enforcement impact fee of $63.00 per 1,000 developed square feet
- We recommend the City adopt the Law Enforcement impact fee at the 100% cost recovery level identified herein to maximize the recovery of expansion-related capital costs from new development while minimizing the burden of funding these capital costs to existing properties.

SECTION 3. FIRE/RESCUE IMPACT FEES

This section describes the calculation of the Fire/Rescue impact fees for the City. The City provides Fire/Rescue services to all residents and businesses within the corporate limits of the City. Therefore, the costs eligible for inclusion in a Fire/Rescue impact fee are only those capital costs incurred by the City which are necessary to provide the observed levels of service to new growth and will be recovered from all new residential and commercial growth within the City.

3.1 COST BASIS

The City currently maintains five Fire/Rescue stations throughout the City limits. The cost basis for the impact fee calculated herein includes the total land costs of these facilities as provided by the Volusia County Property Appraiser and the estimated construction cost escalated to 2015 replacement cost per facility, as provided by City staff. In addition, the City has provided a full inventory of equipment and vehicle assets with replacement costs of each asset. These equipment and vehicle costs are included in the fee cost basis at their 2015 replacement cost. Lastly, the City has purchased a parcel of land for a future fire station, so the costs for this land have been included in the cost basis for the impact fee calculation at its original cost. These costs are presented in the table below:

Existing Cost Basis	
Existing Assets Costs	
Total Land Cost of Existing Fire Stations	$ 712,000
Total Building Cost of Existing Fire Stations (1)	$ 7,600,000
Total Existing Vehicle Replacement Cost	$ 1,279,000
Total Existing Equipment Replacement Cost	$ 1,083,000
Land Purchase Cost for new Fire Station	$ 769,000
Total Existing Asset Costs	$ 11,443,000

(1) Building Cost based upon data provided by City staff. Estimated station cost of $1,520,000, with 5 stations ($1,520,000 x 5 = $7,600,000)

3.2 RESULTS

3.2.1 Impact Fee Calculation

To determine the impact fee amounts, the total costs identified above are divided amongst the total developed square footage in the City to determine the cost per square foot to provide the current observed level of service. Developed square footage is defined as the size or square footage of all structures and buildings developed on properties within the City. The developed square footage does not include the size of land or any vacant acreage within the City. The total existing square footage within the City was obtained using data from the Volusia County Property Appraiser. A subsequent 10% credit was then applied to the cost per square foot in the calculation of the impact fee amount to avoid double recovery of grants and other funding sources such as ad valorem taxes or other taxes/fees. In addition, a 3% reduction for allowance of estimation and contingency was included in the fee calculation. The table below presents the Fire/Rescue impact fee calculation.

Deltona - Fire/Rescue Impact Fee
Impact Fee Calculation

Existing Developed Sq Ft [1]			
Residential		74,963,674	
Non-Residential		5,824,870	
Total Existing Developed Sq Ft		80,788,544	
Total Costs of Existing Assets:	$	11,411,000	
Existing Asset Cost per Sq Ft	$	0.141	
Less: Credit for Grant and Other Funding	$	(0.014)	10%
Less: Allowance for Estimation/Contingency	$	(0.004)	3%
Impact Fee per Sq Ft	$	0.123	
Impact Fee per 1,000 Sq Ft	$	123.00	
Average Sq Ft per Single Family Home:		2,286	
Average SF Home Rounded to nearest 1,000 Sq Ft		2,000	
Calculated Fee for Average Single Family Home	**$**	**246.00**	
Existing Fee for Average Single Family Home	$	214.49	
$ Change	*$*	*31.51*	
% Change		*15%*	*Increase*

(1) - Developed Square Footage obtained from the Volusia County Property Appraiser

While the calculated impact fees are presented on a square footage basis, for implementation purposes the City has requested the fees be presented on a per 1,000 square foot basis. As such the proposed fee schedule is presented below by land use category.

Proposed Fire/Rescue Impact Fee Schedule

Residential	Impact Fee Unit	Impact Fee
Single Family Residential	1,000 Square Feet	$123.00
Multi Family	1,000 Square Feet	$123.00
Hotel/Motel	1,000 Square Feet	$123.00
Office	1,000 Square Feet	$123.00
Hospital/Nursing Home/Clinic	1,000 Square Feet	$123.00
Gas Stations/Convenience Stores	1,000 Square Feet	$123.00
General Retail	1,000 Square Feet	$123.00
Sit-Down Restaurants/Bars	1,000 Square Feet	$123.00
Fast Food/Cafes - No Drive Thru	1,000 Square Feet	$123.00
Fast Food/Cafes - With Drive Thru	1,000 Square Feet	$123.00
Banks	1,000 Square Feet	$123.00
Movie Theaters	1,000 Square Feet	$123.00
Auto Care	1,000 Square Feet	$123.00
Industrial/Utilities	1,000 Square Feet	$123.00
Warehousing	1,000 Square Feet	$123.00
Indoor Recreation/Sports/Fitness	1,000 Square Feet	$123.00
Outdoor Recreation/Sports/Fitness	1,000 Square Feet	$123.00
Civic/Institutional	1,000 Square Feet	$123.00
Daycare	1,000 Square Feet	$123.00

It is important to note that the City has discretion regarding the percentage of cost recovery utilized in the establishment of impact fees. The impact fees can recover any amount up to but not in excess of the full cost recovery amounts identified herein. Adoption of impact fees at full cost recovery would lessen the pressure on taxes and other general fund revenues used to fund fire/rescue facilities and equipment, thus reducing the need for funding of those facilities and equipment with general fund revenues. However, the City has discretion to adopt any amount up to 100% of the amounts identified herein.

3.2.2 Fire/Rescue Impact fee Survey

In order to provide additional information to the City regarding the calculated Fire/Rescue impact fees, a comparison of the fees for the City to those of neighboring and other generally comparable municipalities was prepared. These comparisons are

presented in the table below and provide a comparison of the City's calculated Fire/Rescue impact fees for a typical single-family residential home to the fees currently imposed by neighboring municipalities.

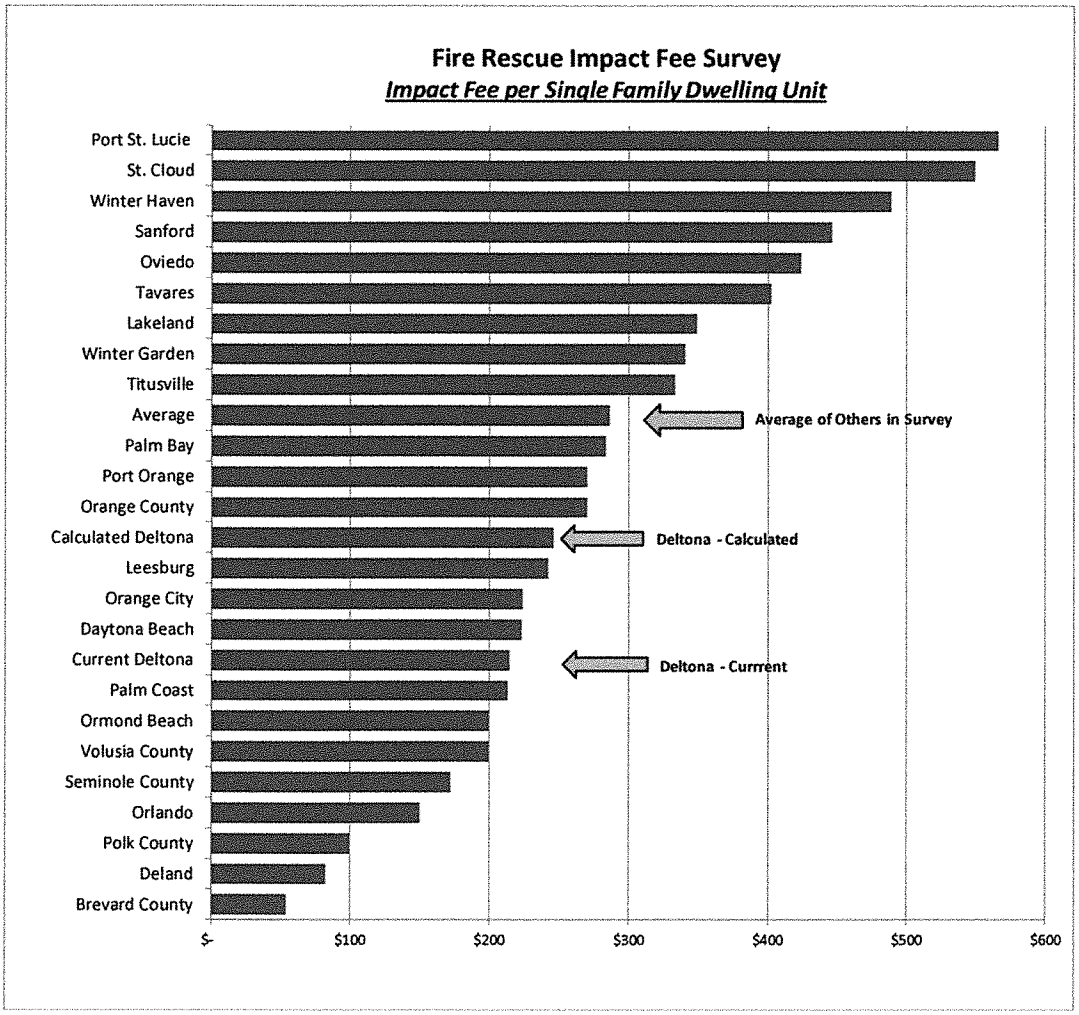

It is important to note that the reader must view the comparison with caution as no in depth analysis has been performed to identify the methods used in the development of the impact fees imposed by the other municipalities, nor has any analysis been performed to determine whether the fees of other jurisdictions represent 100% cost recovery impact fees.

3.3 CONCLUSIONS AND RECOMMENDATIONS

The fundamental conclusions and recommendations of the Fire/Rescue impact fee calculation are as follows:

- The calculated Fire/Rescue Impact Fee of $123.00 per 1,000 developed square feet, when applied to the typical single family home, results in an impact fee that is just below the average in the survey above.
- The City should adopt the calculated Fire/Rescue impact fee of $123.00 per 1,000 developed square feet to recover the cost of Fire/Rescue assets required to serve new development.
- We recommend the City adopt the Fire/Rescue impact fee at the 100% cost recovery levels identified herein to maximize the recovery of expansion-related capital costs from new customers while minimizing the burden of these capital costs to existing properties.

SECTION 4. PARKS AND RECREATION IMPACT FEES

This section describes the calculation of the Parks & Recreation impact fee for the City. Impact fees must be properly allocated to property classes that benefit from the assets being funded by the impact fees. In the case of Parks & Recreation, the property class that primarily benefits from the assets funded by the impact fees is the residential class because Parks & Recreation facilities are primarily used by residents. Therefore, all costs associated with the Parks & Recreation impact fees are allocated 100% to the residential class. The costs eligible for inclusion in a Parks & Recreation impact fee are determined as those costs necessary to provide the adopted levels of service to new growth and will be recovered from all new residential growth within the City.

4.1 COST BASIS & LEVEL OF SERVICE STANDARDS

The need for new Parks & Recreation assets is driven by acres of park space and the need for acres of park space is driven by population growth relative to the current number of acres per 1,000 population. Our analysis shows that the City is essentially achieving its adopted level of service (LOS) of 3.0 acres per 1.000 population, therefore, in order to maintain the adopted LOS, as growth occurs, additional acres of park space must be added and the additional equipment and facilities necessary to convert the land to usable park space must be purchased. If such an approach is not adopted, additional growth will degrade the LOS provided, as the number of existing park and recreation facilities per 1,000 population decreases with additional population.

In order to develop Parks & Recreation impact fees for the City we first reviewed the existing LOS standards with City staff. We also determined the relationship between the need for additional equipment and facilities and number of park acres. For example, for each new park acre added to meet the demands of growth, additional buildings and equipment sets will be needed to make the park land usable for the population. The table below presents the City's existing park inventory, including acreage and land value per park. In addition, City staff has provided a full asset inventory including the 2015

replacement cost (new) of all buildings, equipment and improvements for all parks. These land values and facilities and equipment costs are aggregated to determine the existing cost per park acre as presented in the table below.

City of Deltona Park Inventory

Park Name	Area (Acres)	Land Value (rounded)
Thornby Park	37.15	$ 843,000
Manny Rodriquez Park	6.27	$ 201,000
Lake Gleason Park	1.38	$ 81,000
Campbell Park	10.10	$ 428,000
Vann Park	24.40	$ 338,000
Lombardy Park	3.04	$ 26,000
Wes Crile Park	13.14	$ 689,000
Dewey O. Boster Park	102.90	$ 1,007,000
Keysville Dog Park	14.11	$ 21,000
Dwight Hawkins Park	12.80	$ 265,000
Harris Saxon Park	5.47	$ 784,000
Skate Park	8.00	$ 172,000
Festival Park	11.60	$ 172,000
DuPont Lakes Park	7.58	$ 893,000
	257.94	$ 5,920,000
Existing Assets Costs		
Land		$ 5,920,000
Facilities & Equipment (1)		$ 18,702,000
Total Existing Asset Costs		$ 24,622,000
Existing Asset Costs Per Park Acre		
Land		$ 22,951
Facilities & Equipment		$ 72,505
Total Existing Asset Costs Per Park Acre		$ 95,456

(1) Replacement Cost New of all Facilities & Equipment provided by City Staff

When divided amongst the current City-wide population, the existing park inventory results in an observed LOS of 2.9 Acres per 1,000 residents. The City's Comprehensive Plan contains LOS standards for the current year, as well as projected LOS through 2025.

Deltona - Parks & Recreation Impact Fee
Level of Service Standards

2015 Population:	87,647
2015 Park Acres:	258
Observed LOS	2.9
Existing LOS per Comp Plan (2015)	3.0
Future LOS per Comp Plan (2025)	3.5

We then used the population projections prepared by the Shimberg Center for Housing Studies, provided by City staff, to determine the number of park acres needed in 10 years to serve population growth. The existing cost of assets per park acre is applied to the total new park acres required to serve the projected population. We calculated two components of the costs for future parks, land and facilities/equipment.

Through discussions with City staff, it was determined that the majority of new park acreage would come from existing City owned land. Staff identified that, of the projected 79 new acres needed to serve the future population, only 10% would need to be purchased to serve the future LOS. However, the City would need to fully invest in all 79 acres to convert the land to active park space, and as such the full cost of facilities and equipment per acre is applied. The table below presents the full calculated cost to purchase 10% of the projected new acres for park space, and to convert the park space to active parks by purchasing facilities and equipment.

Deltona - Parks & Recreation Impact Fee
Projected Cost Basis

2025 Projected Population:		97,696
Future LOS per Comp Plan (2025)		3.5
2015 Required Active Park Acres @ LOS		263
2025 Required Active Park Acres @ LOS		342
Existing Park Land Cost per Acre	$	22,951
New Land Acres Needed to Serve Future LOS		79
% of Land to be Purchased for Future LOS (1)		10%
New Land Acres Purchased Serve Future LOS		7.9
Total Costs for Future Park Land Purchase	$	181,313
Facilities & Equipment Cost per Acre	$	72,505
New Facilities & Equipment Acres Needed to Serve Future LOS		79
Total Costs for Future Park Equipment & Facilities Purchase	$	5,727,895
Total Costs to Serve Future population at Future LOS	**$**	**5,909,208**

(1) - This percentage recognizes that the City currently owns significant acreage that could be converted to active parks. Through discusions with City staff, approximately 10% of future park land would need to be purchased outside of existing inventory.

The costs are then divided into the total projected population[1] and associated housing unit growth by 2025. By using US Census data to determine the residents per household in the City, we projected the 10-year housing unit growth as shown in the table below.

[1] Source: Shimberg Center for Housing Studies

Deltona - Parks & Recreation Impact Fee
Projected Population and Housing Unit Growth

2015 Population:	87,647
2025 Projected Population:	97,696
10-Year Population Growth:	10,049
Residents per Household (1):	3.01
Total 10-Year Household Growth	3,339

(1): Based upon US Census Data

4.2 RESULTS

4.2.1 Impact Fee Amounts

To determine the impact fee amounts, the total costs identified above are divided amongst the total projected housing unit growth to determine the cost per household. A subsequent 10% credit was then included in the calculation to avoid double recovery of grants and other funding sources such as ad valorem taxes or other taxes/fees. In addition, a 3% reduction for allowance of estimation and contingency was included in the fee calculation. The table below presents the Parks & Recreation impact fee calculation.

Deltona - Parks & Recreation Impact Fee
Parks & Recreation Impact Fee Calculation

Total 10-Year Household Growth		3,339	
Total Parks Costs for Growth:	$	5,909,208	
Calculated Cost per Household	$	1,770.00	
Less: Credit for Grant and Other Funding	$	(177.00)	10%
Less: Allowance for Estimation/Contingenc	$	(53.10)	3%
Impact Fee per Household:	**$**	**1,539.90**	
Existing Fee per Household:	$	1,556.21	
$ Change	*$*	*(16.31)*	
% Change		*-1%*	*decrease*

As shown in the table above, the calculated impact fee per household is approximately 1% less than the current Parks & Recreation impact fee per household. This difference is well within the margin of potential variation of results based upon assumptions included

in the analysis and as such, the calculations confirm that the current Parks & Recreation impact fees are correctly sized to fund the projected capital investment for future population growth.

The impact fees as calculated herein are presented in the table below by land use category.

Proposed Parks & Recreation Impact Fee Schedule

Residential	Impact Fee Unit	Impact Fee
Single Family Residential	Dwelling Unit	$1,539.90
Multi Family	Dwelling Unit	$830.50
Hotel/Motel	N/A	N/A
Office	N/A	N/A
Hospital/Nursing Home/Clinic	N/A	N/A
Gas Stations/Convenience Stores	N/A	N/A
General Retail	N/A	N/A
Sit-Down Restaurants/Bars	N/A	N/A
Fast Food/Cafes - No Drive Thru	N/A	N/A
Fast Food/Cafes - With Drive Thru	N/A	N/A
Banks	N/A	N/A
Movie Theaters	N/A	N/A
Auto Care	N/A	N/A
Industrial/Utilities	N/A	N/A
Warehousing	N/A	N/A
Indoor Recreation/Sports/Fitness	N/A	N/A
Outdoor Recreation/Sports/Fitness	N/A	N/A
Civic/Institutional	N/A	N/A
Daycare	N/A	N/A

Note: Parks & Recreation Impact Fees are not applicable to non-residential properties.

It is important to note that the City has discretion regarding the percentage of cost recovery utilized in the establishment of impact fees. The impact fees can recover any amount up to but not in excess of the full cost recovery amounts identified herein. Adoption of impact fees at full cost recovery would lessen the pressure on taxes and other general fund revenues used to fund parks and recreation facilities and equipment, thus reducing the need for funding of those facilities and equipment

with general fund revenues. However, the City has discretion to adopt any amount up to 100% of the amounts identified herein.

4.2.2 Parks and Recreation Fee Survey

In order to provide additional information to the City regarding the calculated Parks & Recreation impact fee, a comparison of the fees for the City to those of neighboring and other generally comparable municipalities was prepared. These comparisons are presented in the table below and provide a comparison of the City's calculated Parks & Recreation impact fees for a typical single-family residential home to the fees currently imposed by neighboring municipalities.

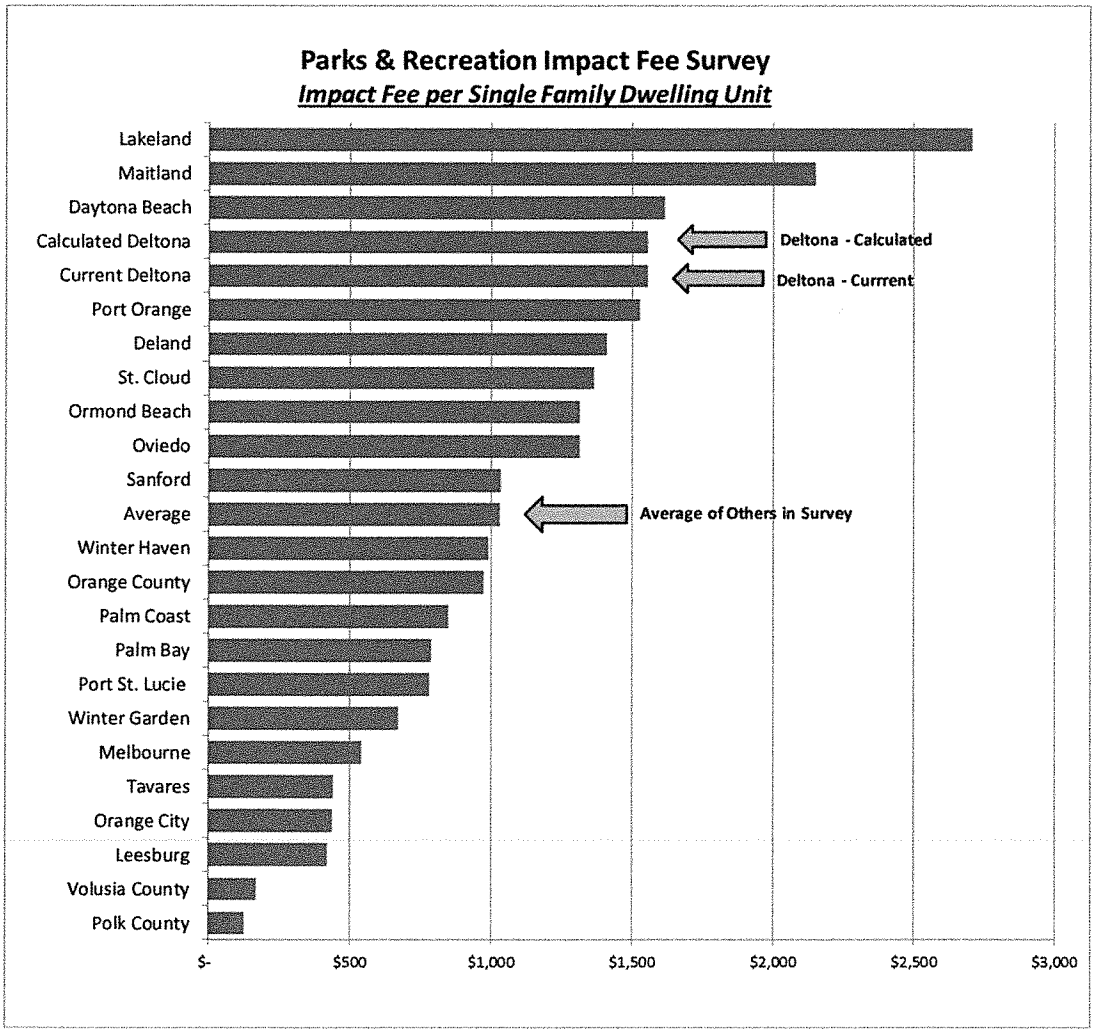

It is important to note that the reader must view the comparison with caution as no in depth analysis has been performed to identify the methods used in the development of the impact fees imposed by the other municipalities, nor has any analysis been performed to determine whether the fees of other jurisdictions represent 100% cost recovery impact fees.

4.3 CONCLUSIONS AND RECOMMENDATIONS

The fundamental conclusions and recommendations of the Parks & Recreation impact fee calculation are as follows:

- The calculated fees confirm the City's existing fees are correctly sized to fund the Park & Recreation capital needs of the future population
- We recommend the City maintain its existing Park & Recreation impact fees

SECTION 5. TRANSPORTATION IMPACT FEES

This section describes the calculation of the Transportation impact fees for the City. The City's roads are available to and utilized by all residents and businesses in the City. Therefore, the costs eligible for inclusion in a Transportation impact fee are those costs necessary to provide the adopted level of service standards to new growth and will be recovered from all new residential and commercial growth within the City.

5.1 COST BASIS & LEVEL OF SERVICE STANDARDS

The need for new roads is driven by the number of vehicle trips relative to the current capacity of the City's existing roads at its adopted Level of Service (LOS) standard. In order to maintain the current LOS, as growth occurs and additional trips are generated, additional lanes must be added to existing roads and additional roads must be added to the City's transportation network. If such an approach is not adopted, additional growth will degrade the level of service as roads become more congested.

In order to develop Transportation impact fees for the City we first obtained a listing of the City's designated thoroughfares and existing LOS standards for each from City staff. We also reviewed the City of Deltona Comp Plan roadway number of lanes with City staff.

The unit cost of adding capacity is a function of the project cost and the increase in capacity. The estimated project costs for projects in the Comp Plan were provided by staff, and include actual costs for one project completed in FY 2015.

The table below presents the City's projects for additions to designated thoroughfares considered in this study, including the City's adopted LOS standard, length of the road segment, current number of lanes, and proposed number of lanes by 2025.

Designated Road Classified Thoroughfares

	A	B	C	D	E	F	G	H	I	J	L	M	N	O	P
	Type	Road	Section	Miles	Existing Lanes	Proposed Lanes	Add'l Lanes	Added Lane Miles	Daily LOS Capacity	New Capacity	Add'l Capacity	VMCs Added	Approx. Road Investment*	Cost Per Added Lane Mile	Cost Per VMC
1	Collector	Catalina Blvd	Bonkirk Dr to Parma Dr	0.80	2	3	1	0.8	13,640	20,460	6,820	5,456	$3,300,000	$4,125,000.00	$604.84
2	Minor Arterial	Courtland Blvd	Howland to Alley 1158	3.30	2	3	1	3.3	13,640	20,460	6,820	22,506	$13,500,000	$4,090,909.09	$599.84
3	Principal Arterial	Deltona Blvd	Doyle to Enterprise	1.00	3	4	1	1	14,740	19,653	4,913	4,913	$5,000,000	$5,000,000.00	$1,017.64
4	Principal Arterial	N Normandy Blvd	Graves to Firwood	1.40	2	4	2	2.8	13,640	27,280	13,640	19,096	$15,000,000	$5,357,142.86	$392.75
5	Principal Arterial	N Normandy Blvd	Saxon to Providence	2.75	2	4	2	5.5	13,640	27,280	13,640	37,510	$30,000,000	$5,454,545.45	$399.89
6	Principal Arterial	Elkcam Blvd	N. Normandy Blvd to Ft. Smith	1.60	2	3	1	1.6	13,640	20,460	6,820	10,912	$6,500,000	$4,062,500.00	$595.67
7	Minor Arterial	Ft Smith Blvd	Howland to SR 415	0.54	2	3	1	0.54	13,640	20,460	6,820	3,683	$1,750,000	$3,240,740.74	$475.18
8	Collector	Ft Smith Blvd	Elkcam Blvd to Providence Blvd	1.00	2	3	1	1	13,640	20,460	6,820	6,820	$4,300,000	$4,300,000.00	$630.50
9						Lane Miles Added		16.54			8,287	110,896	$79,350,000	$4,453,854.77	$589.54
10						Total Lane Miles		110.92							
11						% New Lane Miles		14.9%							
12	* Provided by City staff														

5.2 IMPACT FEE CALCULATION

Unit Cost of Capacity - The calculation of the Transportation impact fee consists of first calculating the unit cost of capacity, which is the road cost per Equivalent Dwelling Unit (EDU). An EDU is defined as the peak hour trips generated by a single family home. An EDU is calculated for each property class as the ratio of its trips per unit (square feet for most commercial, acres for parks and some sports facilities, etc.) compared to the trips for a residential single family home. Trips used are net of pass-by trips which are trips not originated or terminated at the subject parcel. An example of a pass-by trip is a trip that originates from a single family parcel and terminates at a retail parcel, but on the way stops at a convenience store. The trip was already on the roadway and would be considered a pass-by trip for the convenience store and removed from the trips used to apportion impact fee costs to that property class.

Impact Fee Credit - After calculating the unit cost of capacity, it is then necessary to calculate a credit to be applied for the net present value (NPV) of the gas tax revenue that the City is projected to receive, net of debt service, over the assumed 25 year life of a road. This is to avoid double recovery of road costs in the impact fee and again in the gas tax that is used to fund roadways and that new development will pay after issuance of a certificate of occupancy (CO). In the NPV calculation it is assumed that the new development will be receiving its CO at the midpoint of the 25 year life of the road. This will calculate the NPV of the gas taxes paid by the "average" new development. Development that receives a CO prior to the midpoint will pay more gas taxes and development that receives a CO after the midpoint will pay less gas taxes, therefore it is accepted practice to use the midpoint to represent the average time that new development will pay gas taxes.

Impact Fee per EDU - The impact fee per EDU is calculated as the Unit Cost of Capacity less the Impact Fee Credit. The following table presents the Impact Fee per EDU Calculation followed by tables supporting that calculation that are referred to in the notes associated with each calculation step in the Impact Fee Calculation table.

Impact Fee Calculation

	A		B	C
1	**Vehicle Miles per EDU**			
2	Average Trip Length		6.00	Industry Data
3	Daily Trips per EDU (SFR Trips per Unit)		9.82	Trip Generation Rates from the 8th Edition ITE Trip Generation Report
4	Daily Vehicle Miles per EDU		58.92	Row2 x Row3
5	% New Lane Miles		14.91%	Designated Road Classified Thoroughfares
6	Added Daily Vehicle Miles per EDU		8.78	Row4 x Row5
7	Adjusted Vehicle Miles per EDU		4.39	Divide by 2 to prevent the double-counting of travel generated between two land use codes since every trip has an origin and a destination
8	**Cost per Vehicle Mile of Capacity**			
9	Average Cost per Lane Mile		$ 4,453,855	Designated Road Classified Thoroughfares; Column O Row 9
10	Average Capacity per Lane Mile		8,287	Designated Road Classified Thoroughfares; Column L Row 9
11	Cost per Vehicle Mile of Capacity		$ 537.45	Row9 / Row10
12	**Unit Cost of Capacity per EDU**			
13	**Capacity Cost/EDU**		**$ 2,359**	Row7 x Row11
14	**Credit/EDU**			
15	NPV of Gas Tax Revenues After Payment of Debt Service	$ 14,643,049		NPV over life of roads; Debt Service & Pledged Revenues; B24 - Z24
16	Total Road Cost	$ 79,350,000		Designated Road Classified Thoroughfares; Column N Row 9
17	EDUs	33,637		Row16 / Row13
18	**Credit/EDU**		**$ 435**	Row15 / Row17
19	**Impact Fee/EDU**			
20	**Capacity Cost/EDU - Restated**		$ 2,359	Row13
21	**Less: Credit/EDU - Restated**		$ 435	Row18
22	**Impact Fee/EDU**		**$ 1,924**	Row20 - Row21

Designated Road Classified Thoroughfares

	A	B	C	D	E	F	G	H	I	J	L	M	N	O	P
	Type	Road	Section	Miles	Existing Lanes	Proposed Lanes	Add'l Lanes	Added Lane Miles	Daily LOS Capacity	New Capacity	Add'l Capacity	VMCs Added	Approx. Road Investment*	Cost Per Added Lane Mile	Cost Per VMC
1	Collector	Catalina Blvd	Bonkirk Dr to Parma Dr	0.80	2	3	1	0.8	13,640	20,460	6,820	5,456	$3,300,000	$4,125,000.00	$604.84
2	Minor Arterial	Courtland Blvd	Howland to Alley 1158	3.30	2	3	1	3.3	13,640	20,460	6,820	22,506	$13,500,000	$4,090,909.09	$599.84
3	Principal Arterial	Deltona Blvd	Doyle to Enterprise	1.00	3	4	1	1	14,740	19,653	4,913	4,913	$5,000,000	$5,000,000.00	$1,017.64
4	Principal Arterial	N Normandy Blvd	Graves to Firwood	1.40	2	4	2	2.8	13,640	27,280	13,640	19,096	$15,000,000	$5,357,142.86	$392.75
5	Principal Arterial	N Normandy Blvd	Saxon to Providence	2.75	2	4	2	5.5	13,640	27,280	13,640	37,510	$30,000,000	$5,454,545.45	$399.89
6	Principal Arterial	Elkcam Blvd	N. Normandy Blvd to Ft. Smith	1.60	2	3	1	1.6	13,640	20,460	6,820	10,912	$6,500,000	$4,062,500.00	$595.67
7	Minor Arterial	Ft Smith Blvd	Howland to SR 415	0.54	2	3	1	0.54	13,640	20,460	6,820	3,683	$1,750,000	$3,240,740.74	$475.18
8	Collector	Ft Smith Blvd	Elkcam Blvd to Providence Blvd	1.00	2	3	1	1	13,640	20,460	6,820	6,820	$4,300,000	$4,300,000.00	$630.50
9						Lane Miles Added		16.54			8,287	110,896	$79,350,000	$4,453,854.77	$589.54
10						Total Lane Miles		110.92							
11						% New Lane Miles		14.9%							
12	* Provided by City staff														

Debt Service & Pledged Revenues

	A	B	C	D	E	F	G	H	I	J	K	L	M	N	O	P	Q	R	S	T	U	V	W	X	Y	Z	AA
		FY 2016	FY 2017	FY 2018	FY 2019	FY 2020	FY 2021	FY 2022	FY 2023	FY 2024	FY 2025	FY 2026	FY 2027	FY 2028	FY 2029	FY 2030	FY 2031	FY 2032	FY 2033	FY 2034	FY 2035	FY 2036	FY 2037	FY 2038	FY 2039	FY 2040	Total FY16-FY40
1	Series 2006																										
2	Principal	870,000	915,000	955,000	995,000	1,040,000	1,085,000	1,135,000	1,195,000	1,255,000	1,320,000	1,385,000	-	-	-	-	-	-	-	-	-	-	-	-	-	-	12,150,000
3	Interest	585,925	544,575	504,544	462,762	417,988	371,188	322,363	264,194	202,950	138,631	70,981	-	-	-	-	-	-	-	-	-	-	-	-	-	-	3,886,101
4	Total	1,455,925	1,459,575	1,459,544	1,457,762	1,457,988	1,456,188	1,457,363	1,459,194	1,457,950	1,458,631	1,455,981	-	-	-	-	-	-	-	-	-	-	-	-	-	-	16,036,101
5	Gas Tax																										
6	6 Cent	1,234,316	1,240,634	1,246,952	1,253,270	1,259,621	1,266,003	1,272,417	1,278,864	1,285,344	1,291,857	1,298,402	1,304,981	1,311,593	1,318,239	1,324,918	1,331,631	1,338,378	1,345,159	1,351,975	1,358,825	1,365,710	1,372,630	1,379,585	1,386,575	1,393,600	32,811,481
7	5 Cent	914,684	919,366	924,048	928,730	933,435	938,165	942,918	947,695	952,498	957,324	962,174	967,049	971,949	976,874	981,823	986,798	991,798	996,823	1,001,874	1,006,950	1,012,052	1,017,180	1,022,334	1,027,514	1,032,720	24,314,775
8	Total	2,149,000	2,160,000	2,171,000	2,182,000	2,193,056	2,204,167	2,215,336	2,226,560	2,237,842	2,249,180	2,260,576	2,272,030	2,283,542	2,295,112	2,306,741	2,318,429	2,330,176	2,341,983	2,353,849	2,365,775	2,377,762	2,389,810	2,401,919	2,414,089	2,426,320	57,126,256
9	Change	0.5%	0.5%	0.5%	0.5%	0.5%	0.5%	0.5%	0.5%	0.5%	0.5%	0.5%	0.5%	0.5%	0.5%	0.5%	0.5%	0.5%	0.5%	0.5%	0.5%	0.5%	0.5%	0.5%	0.5%	0.5%	
10	Total Gas Taxes	2,149,000	2,160,000	2,171,000	2,182,000	2,193,056	2,204,167	2,215,336	2,226,560	2,237,842	2,249,180	2,260,576	2,272,030	2,283,542	2,295,112	2,306,741	2,318,429	2,330,176	2,341,983	2,353,849	2,365,775	2,377,762	2,389,810	2,401,919	2,414,089	2,426,320	21,988,141
11	Less Debt Service	1,455,925	1,459,575	1,459,544	1,457,762	1,457,988	1,456,188	1,457,363	1,459,194	1,457,950	1,458,631	1,455,981	-	-	-	-	-	-	-	-	-	-	-	-	-	-	14,580,120
12	Amt Available for CIP	693,075	700,425	711,456	724,238	735,068	747,979	757,973	767,366	779,892	790,549	804,595	2,272,030	2,283,542	2,295,112	2,306,741	2,318,429	2,330,176	2,341,983	2,353,849	2,365,775	2,377,762	2,389,810	2,401,919	2,414,089	2,426,320	7,408,021
13	Amt Available for CIP for Development Unit CO'd at Midpoint in Life of Roads	-	-	-	-	-	-	-	-	-	-	-	-	2,283,542	2,295,112	2,306,741	2,318,429	2,330,176	2,341,983	2,353,849	2,365,775	2,377,762	2,389,810	2,401,919	2,414,089	2,426,320	
14																											

15 *Note: 6 Cent tax revenues can only be used for general road improvements and maintenance
5 Cent tax revenues can only be used for projects in the Comp Plan
In any year that Pledged Revenues do not exceed Debt Service, the GF must transfer the difference, per bond covenants

Impact Fee by Property Class – After calculating the impact fee per EDU it is then necessary to determine the impact fee per unit for each property class. This is done by first determining the EDUs per unit for each class as the ratio of the peak trips generated by each class compared to the peak trips per dwelling unit for the single family class[2]. For the Retail and Service classes, consideration was given to the nature of the trips to these locations. A percentage of the trips generated by these businesses will be pass-by trips that are incidental to an intentional trip on the adjacent roadway. For example, a vehicle traveling from home to the grocery store may stop at a gas station along the way. This intermediate stop did not generate the trip and should not be burdened with the fee for it. Consequently, a "pass by" rate for each land use category was used to adjust the impact fee per EDU[3].

These EDUs for each property class are then multiplied by the Impact Fee per EDU to determine the Impact Fee per unit for each property class. The following table presents the results of that calculation in a table of Impact Fees per Unit for each Property Class. It should be noted that the property classes included represent consolidation of a number of property classes in the current Impact Fee Rate Structure.

Based upon discussions with City staff and per our recommendation, a number of the current property classes are not applicable to the type of development that occurs in Deltona and the City preferred to simplify the property class designations where possible to provide for ease of implementation and understanding by City staff and the public, as well as in the provision future updates. A presentation of trip generation rates by ITE class, compiled by sub-class for the purposes of the impact fees in this report and the calculation of EDUs and impact fees per unit by sub-class is presented in the following table followed by a summary presentation of the impact fees by subclass.

---

[2] Trip Generation Rated were compiled from the ITE Trip Generation Manual, 9th edition

[3] Pass-by rates were compiled from the ITE Trip Generation Handbook, 3rd edition

	A	B	C	D	E	F	G	H	I
	Impact Fee Subclass	Code	ITE Code	Unit	PM Peak Period Rate	Applied Pass-By Rate	Pass-By Trip Adjustment Factor	Subclass EDUs	Subclass Impact Fee/Unit
1	Industrial/Utilities	110	General Light Industrial	1,000 sf	0.97	0%	1.00	0.68	$1,308
2	Industrial/Utilities	120	General Heavy Industrial	1,000 sf	0.68	0%	1.00	0.68	$1,308
3	Industrial/Utilities	130	Industrial Park	1,000 sf	0.85	0%	1.00	0.68	$1,308
4	Industrial/Utilities	140	Manufacturing	1,000 sf	0.73	0%	1.00	0.68	$1,308
5	Warehousing	150	Warehousing	1,000 sf	0.32	0%	1.00	0.23	$449
6	Warehousing	151	Mini Warehouse	1,000 sf	0.26	0%	1.00	0.23	$449
7	Warehousing	152	High-Cube Warehouse	1,000 sf	0.12	0%	1.00	0.23	$449
8	Industrial/Utilities	160	Data Center	1,000 sf	0.09	0%	1.00	0.68	$1,308
9	Industrial/Utilities	170	Utilities	1,000 sf	0.76	0%	1.00	0.68	$1,308
10	Single Family Residential	210	Single Family Homes	DU	1.00	0%	1.00	1.00	$1,924
11	Multifamily	220	Apartment	DU	0.62	0%	1.00	0.46	$888
12	Multifamily	222	High Rise Apartment	DU	0.35	0%	1.00	0.46	$888
13	Multifamily	230	Resd. Condo/Townhouse	DU	0.52	0%	1.00	0.46	$888
14	Multifamily	240	Mobile Home Park	Occ. DU	0.59	0%	1.00	0.46	$888
15	Multifamily	251	Elderly Housing-Detached	DU	0.27	0%	1.00	0.46	$888
16	Multifamily	260	Recreational Homes	DU	0.26	0%	1.00	0.46	$888
17	Multifamily	270	Residential PUD	DU	0.62	0%	1.00	0.46	$888
18	Hotel/Motel	310	Hotel	Room	0.60	0%	1.00	0.54	$1,029
19	Hotel/Motel	320	Motel	Room	0.47	0%	1.00	0.54	$1,029
20	Outdoor Recreation/Sports/Fitness	412	County Park	Acre	0.09	0%	1.00	0.39	$755
21	Outdoor Recreation/Sports/Fitness	416	Campground/RV Park	Acre	0.98	0%	1.00	0.39	$755
22	Outdoor Recreation/Sports/Fitness	417	Regional Park	Acre	0.20	0%	1.00	0.39	$755
23	Outdoor Recreation/Sports/Fitness	430	Golf Course	Acre	0.30	0%	1.00	0.39	$755
24	Movie Theaters	444	Movie Theater w/ matinee	1,000 sf	3.80	0%	1.00	3.80	$7,311
25	Indoor Recreation/Sports/Fitness	473	Casino/Video Lottery Establishment	1,000 sf	13.43	0%	1.00	4.82	$9,266
26	Indoor Recreation/Sports/Fitness	491	Racquet/Tennis Club	1,000 sf	0.84	0%	1.00	4.82	$9,266
27	Indoor Recreation/Sports/Fitness	492	Health/Fitness Club	1,000 sf	3.53	0%	1.00	4.82	$9,266
28	Indoor Recreation/Sports/Fitness	494	Bowling Alley	1,000 sf	3.54	0%	1.00	4.82	$9,266
29	Indoor Recreation/Sports/Fitness	495	Recreational Com. Center	1,000 sf	2.74	0%	1.00	4.82	$9,266
30	Civic/Institutional	520	Elementary School	1,000 sf	1.21	0%	1.00	2.21	$4,246
31	Civic/Institutional	522	Middle/ JR. High School	1,000 sf	1.19	0%	1.00	2.21	$4,246
32	Civic/Institutional	530	High School	1,000 sf	0.97	0%	1.00	2.21	$4,246
33	Civic/Institutional	540	Junior/ Comm. College	1,000 sf	2.54	0%	1.00	2.21	$4,246
34	Civic/Institutional	560	Church	1,000 sf	0.55	0%	1.00	2.21	$4,246
35	Civic/Institutional	561	Synagogue	1,000 sf	1.69	0%	1.00	2.21	$4,246

	A	B	C	D	E	F	G	H	I
	Impact Fee Subclass	Code	ITE Code	Unit	PM Peak Period Rate	Applied Pass-By Rate	Pass-By Trip Adjustment Factor	Subclass EDUs	Subclass Impact Fee/Unit
36	Daycare	565	Daycare Center	1,000 sf	12.34	0%	1.00	12.34	$23,741
37	Civic/Institutional	590	Library	1,000 sf	7.30	0%	1.00	2.21	$4,246
38	Hospital/Nursing Home/Clinic	610	Hospital	1,000 sf	0.93	0%	1.00	2.28	$4,393
39	Hospital/Nursing Home/Clinic	620	Nursing Home	1,000 sf	0.74	0%	1.00	2.28	$4,393
40	Hospital/Nursing Home/Clinic	630	Clinic	1,000 sf	5.18	0%	1.00	2.28	$4,393
41	Office	710	General Office	1,000 sf	1.49	0%	1.00	4.04	$7,764
42	Office	714	Corporate Headquarters	1,000 sf	1.41	0%	1.00	4.04	$7,764
43	Office	715	Single Tenant Office Bldg	1,000 sf	1.74	0%	1.00	4.04	$7,764
44	Office	720	Medical Dental Office	1,000 sf	3.57	0%	1.00	4.04	$7,764
45	Office	730	Government Office Building	1,000 sf	1.21	0%	1.00	4.04	$7,764
46	Office	731	State Motor Vehicles Dept.	1,000 sf	17.09	0%	1.00	4.04	$7,764
47	Office	732	US Post Office	1,000 sf	11.22	0%	1.00	4.04	$7,764
48	Office	733	Gov. Office Complex	1,000 sf	2.85	0%	1.00	4.04	$7,764
49	Office	750	Office Park	1,000 sf	1.48	0%	1.00	4.04	$7,764
50	Office	760	R&D Center	1,000 sf	1.07	0%	1.00	4.04	$7,764
51	Office	770	Business Park	1,000 sf	1.26	0%	1.00	4.04	$7,764
52	General Retail	812	Building Materials/Lumber	1,000 sf	4.49	40%	0.60	3.02	$5,803
53	General Retail	813	Free-Standing Discount Superstore	1,000 sf	4.35	40%	0.60	3.02	$5,803
54	General Retail	814	Variety Store	1,000 sf	6.82	40%	0.60	3.02	$5,803
55	General Retail	815	Free-Standing Discount Store	1,000 sf	4.98	40%	0.60	3.02	$5,803
56	General Retail	816	Hardware/Paint Store	1,000 sf	4.84	40%	0.60	3.02	$5,803
57	General Retail	817	Nursery (Garden Center)	1,000 sf	6.94	40%	0.60	3.02	$5,803
58	General Retail	818	Nursery (Wholesale)	1,000 sf	5.17	40%	0.60	3.02	$5,803
59	General Retail	820	Shopping Center	1,000 sf	3.71	40%	0.60	3.02	$5,803
60	General Retail	823	Factory Outlet Center	1,000 sf	2.29	40%	0.60	3.02	$5,803
61	General Retail	826	Specialty Retail Center	1,000 sf	2.71	40%	0.60	3.02	$5,803
62	General Retail	841	Automobile Sales	1,000 sf	2.62	40%	0.60	3.02	$5,803
63	General Retail	842	Recreational Vehicle Sales	1,000 sf	2.54	40%	0.60	3.02	$5,803
64	General Retail	843	Automobile Parts Sales	1,000 sf	5.98	40%	0.60	3.02	$5,803
65	Auto Care	848	Tire Store	1,000 sf	4.15	30%	0.70	2.19	$4,206
66	Auto Care	849	Tire Superstore	1,000 sf	2.11	30%	0.70	2.19	$4,206
67	General Retail	850	Supermarket	1,000 sf	9.48	40%	0.60	3.02	$5,803
68	Gas Stations/Convenience Stores	851	Convenien. Mkt. (Open 24 hrs)	1,000 sf	52.41	55%	0.45	12.37	$23,805
69	Gas Stations/Convenience Stores	852	Convenien. Mkt. (Open 16 Hrs)	1,000 sf	34.57	55%	0.45	12.37	$23,805
70	Gas Stations/Convenience Stores	853	Convenien. Mkt w/ Gas Pumps	1,000 sf	50.62	55%	0.45	12.37	$23,805

	A	B	C	D	E	F	G	H	I
	Impact Fee Subclass	Code	ITE Code	Unit	PM Peak Period Rate	Applied Pass-By Rate	Pass-By Trip Adjustment Factor	Subclass EDUs	Subclass Impact Fee/Unit
71	General Retail	854	Discount Supermarket	1,000 sf	8.34	40%	0.60	3.02	$5,803
72	General Retail	857	Discount Club	1,000 sf	4.18	40%	0.60	3.02	$5,803
73	General Retail	860	Wholesale Market (Note: Dist Center; No retail)	1,000 sf	0.88	40%	0.60	3.02	$5,803
74	General Retail	861	Sporting Goods Superstore	1,000 sf	1.84	40%	0.60	3.02	$5,803
75	General Retail	862	Home Improvement Superstore	1,000 sf	2.33	40%	0.60	3.02	$5,803
76	General Retail	863	Electronics Superstore	1,000 sf	4.50	40%	0.60	3.02	$5,803
77	General Retail	864	Toy/Children's Superstore	1,000 sf	4.99	40%	0.60	3.02	$5,803
78	General Retail	865	Baby Superstore	1,000 sf	1.82	40%	0.60	3.02	$5,803
79	General Retail	867	Office Supply Superstore	1,000 sf	3.40	40%	0.60	3.02	$5,803
80	General Retail	868	Book Superstore	1,000 sf	15.82	40%	0.60	3.02	$5,803
81	General Retail	869	Discount Home Furnishing Superstore	1,000 sf	1.57	40%	0.60	3.02	$5,803
82	General Retail	875	Department Store	1,000 sf	1.87	40%	0.60	3.02	$5,803
83	General Retail	876	Apparel Store	1,000 sf	3.83	40%	0.60	3.02	$5,803
84	General Retail	879	Arts and Crafts Store	1,000 sf	6.21	40%	0.60	3.02	$5,803
85	General Retail	880	Drugstore w/o Drive-Thru	1,000 sf	8.40	40%	0.60	3.02	$5,803
86	General Retail	881	Drugstore w/ Drive-Thru	1,000 sf	9.91	40%	0.60	3.02	$5,803
87	General Retail	890	Furniture Store	1,000 sf	0.45	40%	0.60	3.02	$5,803
88	General Retail	896	Video Rental Store	1,000 sf	13.60	40%	0.60	3.02	$5,803
89	Banks	911	Walk-in Bank	1,000 sf	12.13	35%	0.65	11.84	$22,779
90	Banks	912	Drive-in Bank	1,000 sf	24.30	35%	0.65	11.84	$22,779
91	Sit-Down Restaurants/Bars	925	Drinking Place	1,000 sf	11.34	45%	0.55	5.26	$10,116
92	Sit-Down Restaurants/Bars	931	Quality Restaurant	1,000 sf	7.49	45%	0.55	5.26	$10,116
93	Sit-Down Restaurants/Bars	932	High Turnover/Sit Down Rest	1,000 sf	9.85	45%	0.55	5.26	$10,116
94	Fast Food/Cafes - No Drive Thru	933	Fast Food w/o Drive Thru	1,000 sf	26.15	70%	0.30	9.49	$18,258
95	Fast Food/Cafes - With Drive Thru	934	Fast Food w/ Drive Thru	1,000 sf	32.65	70%	0.30	12.87	$24,753
96	Fast Food/Cafes - With Drive Thru	935	Fast Food w/ Drive Thru and No Indoor Seating	1,000 sf	44.99	70%	0.30	12.87	$24,753
97	Fast Food/Cafes - No Drive Thru	936	Coffee/Donut Shop w/o Drive Thru	1,000 sf	40.75	70%	0.30	9.49	$18,258
98	Fast Food/Cafes - With Drive Thru	937	Coffee/Donut Shop w/ Drive Thru	1,000 sf	42.80	70%	0.30	12.87	$24,753
99	Fast Food/Cafes - With Drive Thru	938	Coffee/Donut Shop w/ Drive Thru and No Indoor Seati	1,000 sf	75.00	70%	0.30	12.87	$24,753
100	Fast Food/Cafes - No Drive Thru	939	Bread/Donut/Bagel Shop w/o Drive Thru	1,000 sf	28.00	70%	0.30	9.49	$18,258
101	Fast Food/Cafes - With Drive Thru	940	Bread/Donut/Bagel Shop w/ Drive Thru	1,000 sf	18.99	70%	0.30	12.87	$24,753
102	Auto Care	942	Automobile Care Center	1,000 sf	3.11	30%	0.70	2.19	$4,206
103	Gas Stations/Convenience Stores	944	Gasoline/Service Station	Fuel Position	13.87	55%	0.45	12.37	$23,805
104	Gas Stations/Convenience Stores	945	Serv.Station w/ Conven.Mkt	Fuel Position	13.51	55%	0.45	12.37	$23,805
105	Gas Stations/Convenience Stores	946	Serv.Stat.w/Conv.Mkt.&Carwash	Fuel Position	13.86	55%	0.45	12.37	$23,805
106	Gas Stations/Convenience Stores	950	Truck Stop	1,000 sf	13.63	55%	0.45	12.37	$23,805

Proposed Transportation Impact Fee Schedule

	Unit	Impact Fee
Single Family Residential	Dwelling Unit	$1,924
Multifamily	Dwelling Unit	$888
Hotel/Motel	Room	$1,029
Office	1,000 Square Feet	$7,764
Hospital/Nursing Home/Clinic	1,000 Square Feet	$4,393
Gas Stations/Convenience Stores	1,000 Square Feet	$23,805
General Retail	1,000 Square Feet	$5,803
Sit-Down Restaurants/Bars	1,000 Square Feet	$10,116
Fast Food/Cafes - No Drive Thru	1,000 Square Feet	$18,258
Fast Food/Cafes - With Drive Thru	1,000 Square Feet	$24,753
Banks	1,000 Square Feet	$22,779
Movie Theaters	1,000 Square Feet	$7,311
Auto Care	1,000 Square Feet	$4,206
Industrial/Utilities	1,000 Square Feet	$1,308
Warehousing	1,000 Square Feet	$449
Indoor Recreation/Sports/Fitness	1,000 Square Feet	$9,266
Outdoor Recreation/Sports/Fitness	Acre	$755
Civic/Institutional	1,000 Square Feet	$4,246
Daycare	1,000 Square Feet	$23,741

It is important to note that the City has discretion regarding the percentage of cost recovery utilized in the establishment of impact fees. The impact fees can recover any amount up to, but not in excess of, the full cost recovery amounts identified herein. Adoption of impact fees at full cost recovery would lessen the pressure on taxes and other general fund revenues used to fund transportation facilities and equipment, thus reducing the need for funding of those facilities and equipment with general fund revenues. However, the City has discretion to adopt any amount up to 100% of the amounts identified herein.

5.3 TRANSPORTATION IMPACT FEE SURVEY

In order to provide additional information to the City regarding the calculated Transportation impact fees, a comparison of the impact fee per EDU for the City to those of neighboring and other generally comparable municipalities was prepared. These

comparisons are presented in the following table and provide a comparison of the City's calculated Transportation Impact Fees for a typical single-family residential home to the fees currently imposed by neighboring municipalities.

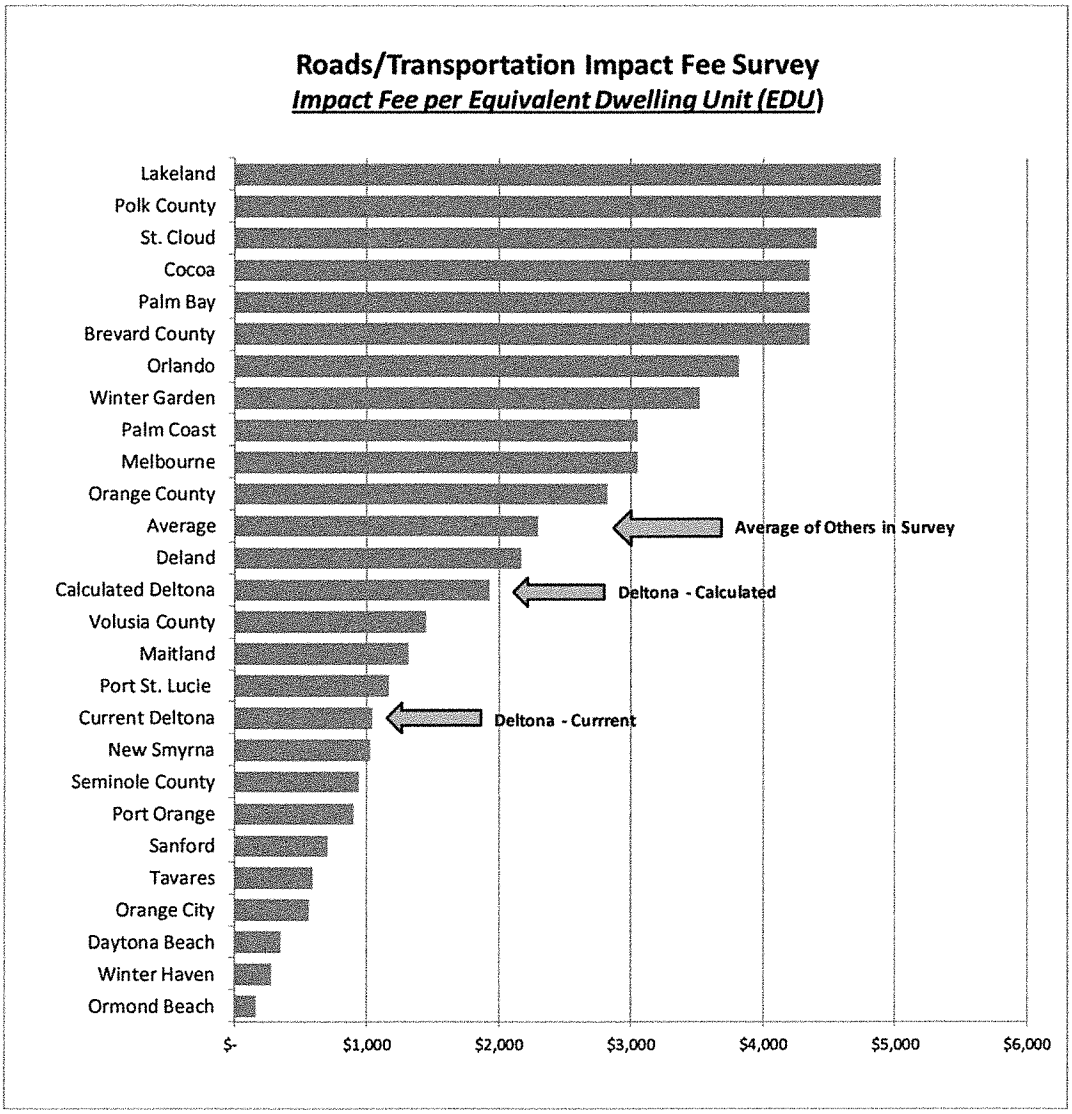

It is important to note that the reader must view the comparison with caution as no in depth analysis has been performed to identify the methods used in the development of the impact fees imposed by the other municipalities, nor has any analysis been performed to determine whether the fees of other jurisdictions represent 100% cost recovery impact fees.

5.4 CONCLUSIONS AND RECOMMENDATIONS

The fundamental conclusions and recommendations of the Transportation impact fee calculation are as follows:

1. The calculated Impact Fee is $1,924 per Equivalent Dwelling Unit (EDU). When compared to the survey above, the recommended impact fee is below the average fee for the other entities surveyed.
2. We recommend the City adopt the Transportation Impact Fee at the 100% cost recovery levels identified herein to maximize the recovery of expansion-related capital costs from new customers while minimizing the burden of these capital costs to existing properties.
3. We recommend that the City simplify its land use categories for the Transportation Impact Fees and adopt the schedule of Transportation Impact Fees by Land Use Category presented in the table on page 32 of this Report:

SECTION 6. SURVEY OF ALL IMPACT FEES

A survey of the total impact fee amount in jurisdictions that have adopted all impact fees considered in this study is presented in the table below.

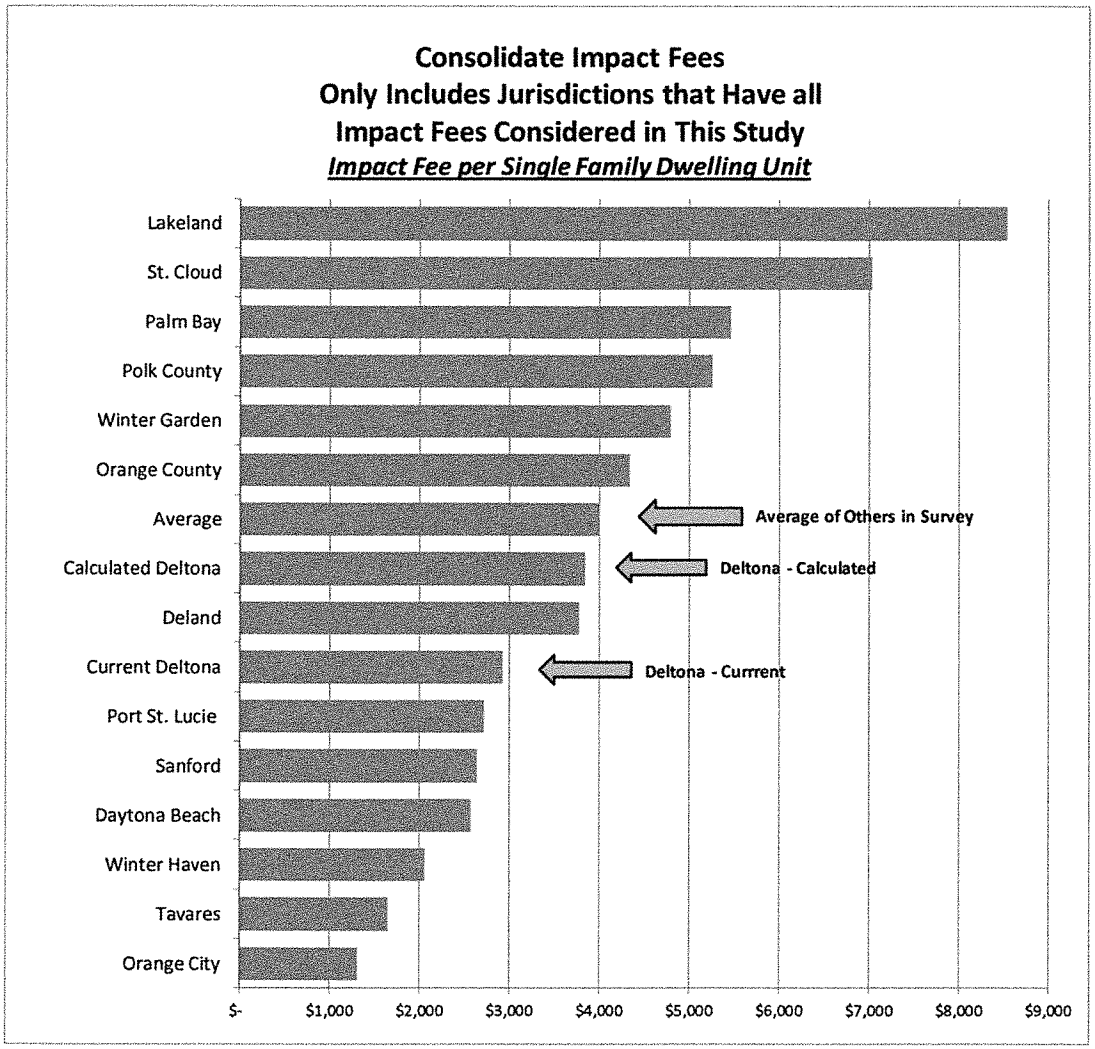

The survey above shows that if the City adopts all of the recommended impact fees in this Report at 100% cost recovery, the total of all impact fees would be $3,852 per Equivalent Dwelling Unit (EDU), which would be just below the average of the total of the same impact fees in the surveyed jurisdictions that have adopted all of the impact fees considered in this report.

City of Deltona

2345 Providence Blvd.
Deltona, FL 32725

Agenda Memo

AGENDA ITEM: B.

TO: Mayor and Commission **AGENDA DATE:** 12/12/2016

FROM: Jane K. Shang, City Manager **AGENDA ITEM:** 9 - B

SUBJECT:
Public Hearing - Ordinance No. 29-2016, Amending Chapter 102, Signs, of the Land Development Code, at first reading - Chris Bowley, AICP, Planning and Development Services, (386) 878-8602.

Strategic Goal: Public Safety - Sign ordinance amendment/rewrite the sign code.

LOCATION:
City-wide

BACKGROUND:
At the November 28, 2016, the City Commission Workshop, the City Commission discussed the proposed sign code and directed staff to meet again with the Deltona Business Alliance (DBA) on an updated sign code draft. Until that additional meeting with the DBA and rewrite occurs, Ordinance No. 29-2016 shall not be heard.

COST:
N/A

SOURCE OF FUNDS:
N/A

ORIGINATING DEPARTMENT:
Planning and Development Services

STAFF RECOMMENDATION PRESENTED BY:
Chris Bowley, AICP, Director, Planning and Development Services - Staff recommends that Ordinance No. 29-2016 be continued until a new sign code version is provided.

POTENTIAL MOTION:
“I hereby move to continue Ordinance No. 29-2016 until a new sign code version is provided.”

powered by Legistar™

ORDINANCE NO. 29-2016

AN ORDINANCE OF THE CITY OF DELTONA, FLORIDA, REPEALING THE EXISTING CHAPTER 102, "SIGNS," OF THE LAND DEVELOPMENT CODE OF THE CITY OF DELTONA AND REPLACING IT WITH A NEW CHAPTER 102 "SIGNS"; PROVIDING SIGNAGE REGULATIONS CONSISTENT WITH APPLICABLE FEDERAL CASE LAW; PROVIDING FOR PURPOSE AND INTENT; PROVIDING REGULATIONS AS TO APPLICATION, PERMITTING AND ENFORCEMENT; PROVIDING DEFINITIONS; PROVIDING PERMANENT, TEMPORARY, AND HANDHELD SIGNS TIME, PLACE AND MANNER REGULATIONS; PROVIDING FOR SIGN MAINTENANCE, VESTING, VARIANCES, ACTS OF EMINENT DOMAIN AND APPEALS; PROVIDING FOR SIGNAGE REMOVAL; PROVIDING FOR EXEMPT, DEMINIMUS SIGNS, AND PROHIBITED SIGNS; AND PROVIDING FOR CONFLICTS, CODIFICATION, SEVERABILITY, AND AN EFFECTIVE DATE.

WHEREAS, the City of Deltona deems it in the best interest of the City of Deltona to revise its sign regulations by the repeal of its current Chapter 102, "Signs" of the City's Land Development Code, and replacing it with a new Chapter 102, "Signs" of the City's Land Development Code; and

WHEREAS, the revised Chapter 102, "Signs", includes provisions that are consistent with new federal case law applicable to sign regulations; and

WHEREAS, and the revised Chapter 102, "Signs", provides a greater range of signage types within a simplified sign ordinance; and

WHEREAS, the City Commission of the City of Deltona, Florida, finds that the revised Chapter 102, "Signs" protects the public health, safety and welfare of the community, and supports economic development within the City.

NOW, THEREFORE, BE IT ORDAINED BY THE CITY COMMISSION OF THE CITY OF DELTONA, FLORIDA, as follows:

Section 1. Chapter 102, "Signs", of the City's Code of Ordinances, is hereby amended by repealing the existing Chapter 102 in its entirety and replacing it to read as follows:

Chapter 102 – Signs

ARTICLE I. GENERAL PROVISIONS

Sec. 102-1. Regulatory signage purpose and intent.

The City of Deltona (City) places primary importance on signage throughout the City as a means to convey information and to provide for an attractive community. The purpose and intent of this Sign Code (Sign Code) is to provide time, place and manner regulations that promote City beautification. Signage within the City is an integral component to on-going economic development and beautification efforts and an important element in the overall design and development of the City. Both economic development and beautification are strategic goals of the City.

Sec. 102-2. Signage regulation application, permitting, and enforcement.

The City shall support the use of signage through an application process and issue a permit when required, by the sign type, either permanent sign or temporary sign. Sign permits shall be administered and issued through the City's Building and Enforcement Services Department and the permit application shall be accompanied by a sign plan indicating the appearance, dimensions, and location of the signs that conforms to this Sign Code. Signs should not be constructed, fabricated or installed until permitted. All signs within the City, unless vested or specifically exempted in this Sign Code, shall have a sign permit. Alterations to sign plans or to a sign during construction, shall be subject to approval by the Building & Enforcement Services Department.

The sign plan shall be professionally completed in the form of design software or technical hand drawings. The plan shall, at a minimum, include the number of permissible signs and proposed signs per location or off-site with dimensions for on-site signs, the sign design, light emission and control standards, if any, sign height with dimensions, and sign orientation. All signs shall be maintained in like-new condition and all sign owners or land owners where the sign is located shall have all business tax receipts or permits required for the activities on the property, if any. Every site utilizing a sign shall have the address for that location clearly and visibly placed on the sign or the associated building for public safety response purposes.

Sec. 102-3. Definitions.

Definitions applicable in this Sign Code can be found in Chapter 70-30, Definitions, of the City's Land Development Code (LDC).

Sec. 102-4. Permanent sign time, place, and manner regulations.

Signage regulations for permanent signs are as follows:

Table 102-1: Permanent Sign Height and Sign Area as Measured by the City

Sign Type	Max. Sign Height	Max. Sign Area
Monument (multi-tenant or single tenant)	10-ft. from the adjacent crown of the road; unless restricted by a utility provider.	80-SF sign
Pole (multi-tenant or single tenant)	20-ft. from the adjacent crown of the road; unless restricted by a utility provider.	64-SF sign
Wall/fascia/fascia return	Per wall copy area.	35% of copy area.
Awning/canopy	Per awning/canopy copy area.	35% of copy area.
Under-canopy/hanging	2-ft. over an 8-ft. clear zone	8-SF
Window/etching	Per window copy area.	25% of window copy area.
Menu-boards/Drive-through	8-ft.	48-SF
Billboards	14-ft.	672-SF
Home Occupation	1-ft.	2-SF

1. Permanent signs have no time limit on their use, shall be content neutral, and allow for commercial speech and opinion signs.
2. Sighting and location of signs shall be based on a sign plan per site and shall not violate any other provisions in the City's Code of Ordinances.
3. Signs shall place the public health, safety, and welfare as paramount, be located in a safe manner that maintains clear site lines/visibility triangles, and does not obstruct public safety personnel.
4. Signs shall not impede pedestrian or motorist safety, as determined by the City.
5. Sign information shall be clearly legible to pedestrians and motorists.
6. Sign construction and installation shall be in compliance with the Florida Building Code and Florida Fire Prevention Code standards, as amended.
7. Maintenance of any sign is the sole responsibility and expense of the sign owner or user/tenant.
8. Signs shall not create public or private nuisances or interfere with other electronic devises.
9. Signs shall have a maximum 40% area for content and 60% area for negative space.
10. All free-standing signs shall be placed along a property frontage with the adjacent roadway.
11. For lots with 100-ft. of frontage or less, one sign per street frontage shall be permitted.
12. For lots with 100-ft. to 299-ft. of frontage, signs may be placed every 100-ft. on-center.
13. For lots greater than 300-ft. of frontage, signs may be placed every 200-ft. on-center.
14. Signs shall not be located closer that 10-ft. from any right-of-way or applicable property line.

15. Signs are for on premise use only, unless defined through a remote signage agreement/use permit that has been approved by the City upon a showing of necessity.
16. Signs shall use decorative architectural features, where possible.
17. Changeable/electronic changeable copy signs are permitted for a permanent sign or copy area and shall be equipped with automatic dimming technology that automatically adjusts for a sign's brightness in direct correlation with ambient light conditions, as applicable.
18. Permanent window signs shall be limited to the name of the establishment/addresses and be placed properly for public safety purposes.
19. Billboards shall only be permissible using highway sighting standards, directly adjacent to the interstate roadway frontage for travel lanes (not ramps), and oriented towards the highway with directional lighting.
20. Signs may be placed on property only with the written permission of the property owner.

Sec. 102-5. Temporary sign time, place, and manner regulations.

Temporary signs are non-permanent signs. Temporary sign frames without their original copy area are not signs and are not permitted in the City. Signage regulations for temporary signs are as follows:

Table 102-2: <u>Temporary Sign Height and Sign Area as Measured by the City</u>

Sign Type	Max. Sign Height	Max. Sign Area
Signs on post and panels	8-ft. from the adjacent crown of the road.	32-SF
All other temporary signs	Per proposed use/permit.	48-SF

1. The temporary sign use period shall be defined in each sign permit, based on their type, and be limited to use only within that time period listed on the sign permit. At the end of the temporary sign use period listed in the permit, the sign shall be removed by the property/sign owner, and if not so removed, it may be removed by the City at the expense of the property owner. Criteria for allowable time limits for temporary signs shall be set by resolution of the City.
2. Signs shall not impede pedestrian or motorist safety, as determined by the City.
3. Sign information shall be clearly legible to pedestrians and motorists.
4. Banners/flags/attention getting devices shall be based on a sign plan per site and shall not violate any other provisions in the City's Code of Ordinances. Criteria for banners/flags/attention getting devices shall be set by resolution of the City.
5. Where temporary signs are proposed to be located on other's property, the permit application shall be accompanied by a written consent of the underlying land owner where the sign is to be placed.
6. Changeable/electronic changeable copy signs are not permitted for a temporary sign or copy area, except for public safety or other public use with the written consent of the City.
7. Sign construction and installation shall be in compliance with the Florida Building Code and Florida Fire Prevention Code standards, as amended.
8. Temporary signs are only temporary/non-permanent and are ancillary to any permanent signage on-site, if any.

9. Signs are for on premise use only, unless defined through a remote signage agreement/use permit that has been approved by the City upon a showing of necessity.
10. Temporary window signs shall be limited to 25% of the window copy area and be placed properly for public safety purposes. The 25% is measured for the entire window area that may include permanent window signage.
11. Signs shall not be located closer that 10-ft. from any right-of-way or applicable property line.

Sec. 102-6. Handheld signs time, place and manner regulations.

Handheld signs shall not require a permit, but are subject to the following regulations:

1. Handheld signs include all signage pertaining to commercial, political, opinion, religious, or any other purpose and may only be displayed during daylight hours between the hours of 7:00 a.m. and 7:00 p.m.
2. Handheld signs may not be displayed in the roadway vision triangle as defined in section 96-37(a)(7), Obstruction of visibility, or within 25 feet of the edge of pavement at a street corner, whichever is less.
3. Persons holding handheld signs shall not interfere with, and must promptly yield to traffic circulation and/or parking in any parking lot, pedestrians utilizing any public or private sidewalk or other walkway, and anyone seeking access to any building, driveway, or parking lot.
4. Handheld signs cannot be displayed along any City, Volusia County, or state roadway with a posted speed limit exceeding 45 miles per hour.
5. Persons displaying handheld signs shall place precedent on public safety and be aware of their environment for public safety to the maximum extent possible.
6. Each handheld sign shall include on it, in at least a 20-point font, the name, address, and current telephone number of the business, entity, or person responsible for its display. The business, entity, or person that is listed or indicated as being responsible for the signage display shall be liable for any violations of this section.
7. Handheld signs shall have a maximum sign area of eight square feet with a dimension not to exceed two by four square feet. Each handheld sign carrier is limited to one sign per person and shall be held by that person at all times.

Sec. 102-7. Signage maintenance, vesting, variances, acts of eminent domain, appeals.

Sign applications submitted prior to the adoption of this Sign Code shall have the option of using the former standards. Upon adoption of this Sign Code, new applications shall only utilize the adopted Sign Code. Interpretations of this Sign Code shall be by the City's Building & Enforcement Services Department, with appeals, if any, to the City Commission.

Existing permanent signs that are maintained in good condition and were not prohibited signs under the City's Sign Code in existence as of the date of the erection of the permanent sign shall be considered vested from the date of the adoption of this Sign Code and shall remain in their current condition with maintenance to keep that vesting. Existing temporary signs, for the purposes of this Sign Code, shall not be considered vested by this Sign Code. All existing hand-made or hand-lettered signs or billboards shall be considered to be temporary in nature,

regardless of the message on the sign face, and shall be removed no later than thirty (30) days after the effective date of this Sign Code.

Anyone desiring to make use of their site, or any portion thereof, other than in strict accordance with the restrictions and specifications set forth in this Sign Code, shall apply to the Building & Enforcement Services Department and use the variance process afforded in the City's Land Development Code. The City shall not approve any application for a variance, unless it finds that denial of the application would result in an undue hardship upon the applicant, where there is no potential for redesign to stay in conformance with the Sign Code, and that the inability to comply with the provisions of this Sign Code is due to site constraints, and is not brought on by the property or sign owner. The grant of variance shall be in harmony with the general intent of this Sign Code.

Where a permitted sign is subject to an act of eminent domain that is not a complete or total taking of a tract that includes a sign location, the property or sign owner shall be allowed to relocate the sign at their or the taking authority's expense to a location on-site in the remainder cure condition that provides both public safety and site function. Due to the nature of the taking action that may create a legally non-conforming lot, the sign relocation may or may not comport to the Land Development Code regulations. Any appeal of a decision regarding a sign permit shall be made to the City Commission, in writing and by hand-delivery or through certified mail to the City Clerk, within 30-days from the date of notice of the decision being appealed. Upon receipt of the written appeal by the City Clerk, the Director of Planning and Development Services shall make a recommendation to the City Commission on the appeal. The City Commission shall make the final decision on the appeal, and any further appeal shall be in accordance with Florida law.

Sec. 102-8. Signage removal.

Removal of any sign that is replaced by a new sign, shall be permitted and constructed using the regulations and guidelines of this Sign Code, as amended from time to time. Signs that are not placed in the proper location shall be properly relocated by the property or sign owner at their expense.

Existing permanent signs that are unmaintained or are in an unsafe condition as determined by the City, shall have ninety (90) calendar days from the date of written notice from the City to repair and maintain the sign, replace the sign to the standards listed within this Sign Code, or remove the sign. Any permanent sign removed by the City for non-compliance with this Sign Code shall be at the expense of the property owner. All signs are to be in as like-new condition as possible. Signs falling into disrepair and/or have functional obsolescence at the discretion of the City, shall be subject to repair and/or removal at the expense of the property owner.

Existing temporary signs shall have thirty (30) calendar days from the effective date of this Sign Code to be permitted with a temporary sign permit or be removed. Any temporary sign removed by the City for non-compliance with this Sign Code shall be at the expense of the property owner.

Empty sign frames or structures without a copy area are not allowed under this Sign Code and shall be immediately removed by the property owner, and if not so removed, they may be removed by the City at the expense of the property owner. Reuse or repurposing of a sign, or placing a new copy area on a sign, is not permitted without a new sign permit under this Sign Code.

Sec. 102-9. Exempt and deminimus signs.

All exempt and deminimus signs shall be maintained in good condition while in use. The following signs shall not require a permit, but are subject to the following regulations:

1. Public safety signs and public signs for public benefit use or events are exempt from this Sign Code and may be placed in rights-of-ways or on public property with either a use permit or agreement from the respective public entity or right-of-way agency.
2. Seasonal decorations.
3. Public art preapproved by the City.
4. Banners at public and private recreational facilities (i.e. parks, gymnasiums, ballfields, etc.) that are safely secured.
5. Signs under one (1) square foot in total area for home occupation use.
6. A-frame or sandwich boards placed and removed the same day as the use or event.
7. For sale and for rent signs, and political or opinion signs, provided that no more than one identical sign is placed on any residential lot, or every 100 lineal feet of road frontage of property for non-residential properties. Each such sign shall not exceed 8 square feet of sign face, and shall only be located on property with the specific permission of the owner or tenant of the property.

Sec. 102-10. Prohibited signs.

1. Hand-made or hand lettered signs.
2. Signs or attention-getting devices that emit sound, have reflective material, overly bright lights, use animate objects, or are a public safety hazard, as determined by the City.
3. Roof-mounted signs.
4. Antennae/tower-mounted signs.
5. Flag-pole mounted signs.
6. Banners on posts or copy faces not securely or properly attached.
7. Unpermitted snipe or parasite signs (i.e. on utility poles).
8. Stickers/adhesive backed signs that are not window signs.
9. Vehicle lettering/graphics/magnetic signs on inoperable vehicles or trailers, or vehicles parked for advertising and not use, as determined by the City.
10. Signs in rights-of-way are prohibited and shall be removed by the City, unless one of the following four scenarios is present:
    a. Public safety signs and public signs for public benefit use or events;
    b. Political signs on the day of the election (not to include early voting days) but they must be removed that election day within two hours after the closing of the polls;

c. Temporary directional real estate signs for new subdivisions with five or more lots for weekend-only model home events, or for individual real estate open house events on the day of the open house only; or
d. No more than two temporary directional garage sale signs on the day of the garage sale only, provided that such garage sale is in conformance with the provisions of Article V, Chapter 22 of the Deltona Code of Ordinances.

Sec. 102-11. Development Review Committee alternative for sign approval.

In order to provide for additional flexibility and innovation for signs, an application for a sign or group of signs that would not otherwise be permitted under this Chapter 102, may be processed in the following manner at the option of the applicant. A sign plan that has been professionally completed in the form of design software or technical hand drawings shall be submitted to the City, processed through the Planning and Development Services staff for review of completeness and sufficiency of the application and proposed sign plan, Development Review Committee (DRC) review and recommendation to the City Commission, and City Commission review and vote at one (1) public hearing. The plan shall, at a minimum, include the number of permissible signs and proposed signs per location or off-site with dimensions for on-site signs, the sign design, light emission and control standards, if any, sign height with dimensions, and sign orientation, as well as depictions that accurately reflect the visual appearance of the signs in the locations where they are proposed to be located. The City Commission shall make the final decision as to the approval or disapproval of the sign plan. The standards that shall be utilized for the review and approval or disapproval of the sign plan shall be:

1. Whether the sign plan is appropriate considering the location of the property on which the sign(s) will be located, taking into consideration the size and speed limit of the roadway fronting the location of the sign(s), and the proximity of residential or other non-commercial properties;
2. Whether the sign plan results in blockage or interference with other pre-existing signs;
3. Whether the sign plan results in an unfair competitive advantage considering existing signs on nearby properties;
4. Whether the signs will have a positive or negative effect upon the property values in the area; and
5. Whether the signs result in an over-all aesthetically pleasing effect.

Sec. 102-12 – 102.20. Reserved.

Section 2. Conflicts. All Ordinances or parts of Ordinances, insofar as they are inconsistent or in conflict with the provisions of this Ordinance, are hereby repealed to the extent of any conflict.

Section 3. Codification. The provisions of this Ordinance shall be codified as and become and be made a part of the Code of Ordinances of the City of Deltona. The sections of this Ordinance may be renumbered or re-lettered to accomplish such intention.

Section 4. Severability. If any provision of this ordinance or the application thereof to any person or circumstance is held invalid, such invalidity shall not affect any other provision or application of this ordinance which can be given effect without the invalid provision or application.

Section 5. Effective Date. This Ordinance shall take effect immediately upon its final adoption by the City Commission.

PASSED AND ADOPTED BY THE CITY COMMISSION OF THE CITY OF DELTONA, FLORIDA THIS _____ DAY OF _____, 2017.

First Reading: _____

Advertised: _____

Second Reading: _____

BY: _____
JOHN C. MASIARCZYK, SR., Mayor

ATTEST:

_____
JOYCE RAFTERY, CMC, MMC, City Clerk

Approved as to form and legality
for use and reliance of the City of
Deltona, Florida

_____
GRETCHEN R. H. VOSE, City Attorney

Staff Report

To: **Planning & Zoning Board**

From: Chris Bowley, AICP, Director
Planning & Development Services

Date: October 14, 2016

Re: Ordinance No. 29-2016: Amending Chapter 102, Signs, of the City's Land Development Code

---

A. Summary of Application:

Applicant: N/A

Request: To amend Chapter 102, Signs, of the City's Land Development Code.

B. Background: The City of Deltona has amended its Sign Code, Chapter 102, Signs, within the Land Development Code (LDC) in the past. The attached Ordinance No. 29-2016 proposes a rewrite of the current signage regulations within an abbreviated Sign Code that replaces the existing Chapter 102, Signs, in the LDC. The proposed new Sign Code also includes updated federal signage regulations that keeps the City's Sign Code consistent with updated content law. Finally, the proposed Sign Code provides for a greater range of signage types (i.e. monument signs and pole signs) and allows for a provision for an applicant to propose a sign plan package through the Development Review Committee (DRC). Local business interest groups and the City's Ordinance Review Committee (ORC) have reviewed this document and had input as to its content.

CONCLUSION:

This version of the Sign Code through adoption of Ordinance No. 29-2016 represents the desire and efforts of the community and City Commission to have functional signage regulations that are easy to use and interpret, flexible to existing and proposed businesses, and provides for aesthetic options. City staff, therefore, supports the attached ordinance and Sign Code for Planning and Zoning Board approval and, ultimate, City Commission adoption.

DELTONA SIGNAGE

Signage Types

TWO SIGN TYPES

Permanent (typical)

- Pole/pylon
- Monument
- Window
- Awning
- Building-mounted
- Directional/Wayfinding
- Multi-tenant

Temporary (typical)

- Attention-getting devices
- Feather
- Real estate
- Snipe
- Banners

SIGNAGE MAINTENANCE

- All signs have potential for good maintenance
- Older well-maintained signs enhance community
- Signs in disrepair are a form of blight
- Proposed new sign code has mechanism for repair or replacement to reduce signage blight
- Any sign vesting should have a vesting date

EXISTING PERMANENT SIGNS

EXISTING PERMANENT SIGNS

EXISTING PERMANENT SIGNS

EXISTING PERMANENT SIGNS

EXISTING PERMANENT SIGNS

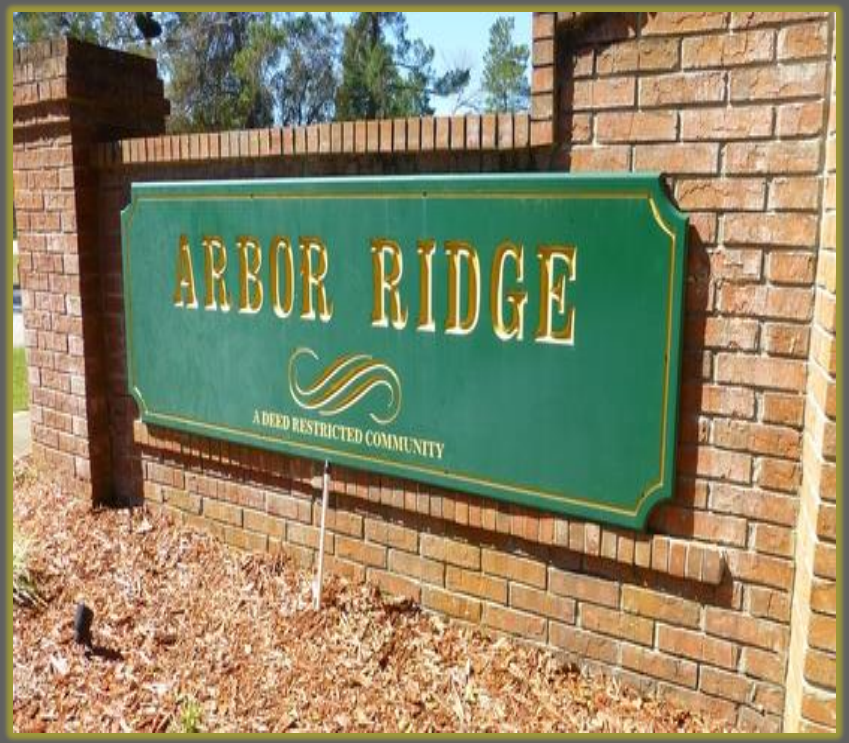

EXISTING PERMANENT SIGNS

EXISTING TEMPORARY SIGNS

EXISTING TEMPORARY SIGNS

EXISTING TEMPORARY SIGNS

EXISTING TEMPORARY SIGNS

EXISTING TEMPORARY SIGNS

EXISTING TEMPORARY SIGNS

EXISTING TEMPORARY SIGNS

EXAMPLES OF QUALITY SIGNS

EXAMPLES OF QUALITY SIGNS

EXAMPLES OF QUALITY SIGNS

EXAMPLES OF QUALITY SIGNS

EXAMPLES OF QUALITY SIGNS

EXAMPLES OF QUALITY SIGNS

EXAMPLES OF QUALITY SIGNS

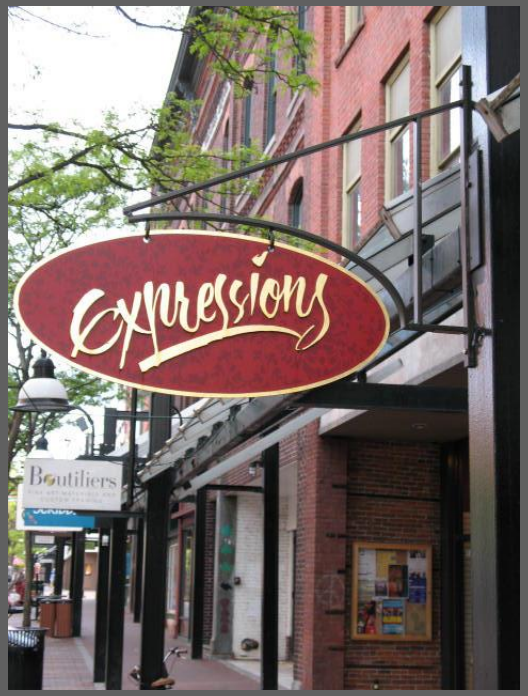

EXAMPLES OF QUALITY SIGNS

EXAMPLES OF QUALITY SIGNS

THANK YOU

City of Deltona

2345 Providence Blvd.
Deltona, FL 32725

Agenda Memo

AGENDA ITEM: C.

TO: Mayor and Commission **AGENDA DATE:** 12/12/2016

FROM: Jane K. Shang, City Manager **AGENDA ITEM:** 9 - C

SUBJECT:
Public Hearing - Ordinance No. 32-2016, Rezoning ±1.67 acres located at 3151 Howland Blvd. from C-2 (General Commercial) to C-1 (Retail Commercial), at first reading - Ron A. Paradise, Assistant Director, Planning and Development Services (386) 878-8610.

Strategic Goal: Economic Development - focus on Howland Blvd. as a gateway for commercial growth.

LOCATION:
The property is located at 3151 Howland Blvd., situated just east of the intersection of Wolfpack Run and Howland Blvd.

BACKGROUND:
The subject property is known as the Jena Medical development (Jena Medical) complex and was used to house the Health Department offices. Jena Medical consists of three (3) office buildings surrounding by a parking lot. The facility now has vacant leasable area that has been difficult to fill. Therefore, the owner is requesting the property be rezoned from C-2 to C-1 to allow for a house of worship as a permitted use, which is interested in becoming a tenant. No daycare facility or other ancillary uses sometimes associated with churches are planned.

The requested C-1 zoning is consistent with the Comprehensive Plan, does not result in the creation of non-conforming uses and structures, and is compatible with existing commercial and institutional land uses (Deltona High School, four houses of worship) in the immediate area. For more information, including graphics, see the attached staff report. Through this action, the entire site is proposed to be rezoned.

COST:
N/A

SOURCE OF FUNDS:
N/A

ORIGINATING DEPARTMENT:
Planning and Development Services

STAFF RECOMMENDATION PRESENTED BY:
Ron A. Paradise, Assistant Director - Staff recommends the City Commission approve Ordinance No.

AGENDA ITEM: C.

32-2016 rezoning ±1.67 acres located at 3151 Howland Blvd. from C-2 (General Commercial) to C-1 (Retail Commercial).

POTENTIAL MOTION:
"I hereby move to approve Ordinance No. 32-2016 rezoning ±1.67 acres located at 3151 Howland Blvd. from C-2 (General Commercial) to C-1 (Retail Commercial)."

ORDINANCE NO. 32-2016

AN ORDINANCE OF THE CITY OF DELTONA, FLORIDA, AMENDING THE OFFICIAL ZONING MAP PURSUANT TO CHAPTER 110, SECTION 1101, OF THE CITY CODE OF ORDINANCES FOR THE PROPERTY LOCATED AT 3151 HOWLAND BOULEVARD FROM GENERAL COMMERCIAL (C-2) TO RETAIL COMMERCIAL (C-1); PROVIDING FOR CONFLICTS, SEVERABILITY, AND EFFECTIVE DATE.

WHEREAS, the City has received an application to amend the zoning for the property located at 3151 Howland Boulevard, legally described as follows: Begin At The Southwest Corner Of The Southeast 1/4 Of The Northwest 1/4 Of Section 8, Township 18 South, Range 31 East; Thence Run North 01 Degrees 15 Minutes 35 Seconds West 2262.68 Feet To The Southerly Right-Of-Way Line Of State Road 444, Thence Run Easterly Along Said Right-Of-Way Line 295.17 Feet To The Point Of Beginning; Thence Run North 88 Degrees 44 Minutes 00 Seconds East 200 Feet; Thence Run South 01 Degrees 16 Minutes 00 Seconds East 1100 Feet Thence Run South 88 Degrees 44 Minutes 00 Seconds West 200 Feet; Thence Run North 01 Degrees 16 Minutes 00 Seconds West 1100 Feel To The Point Of Beginning. (Less The Southerly 440 Feet Thereof.) from General Commercial (C-2) to Retail Commercial (C-1); and

WHEREAS, the City of Deltona, Florida and its Land Planning Agency have complied with the requirements of the Municipal Home Rule Powers Act, sections 166.011 et. seq., Florida Statutes, in considering the proposed rezoning from General Commercial (C-2) to Retail Commercial (C-1); and

WHEREAS, after said public hearing, the City Commission of the City of Deltona, Florida, has determined that the C-1 zoning is consistent with the Comprehensive Plan of the City of Deltona, Florida.

NOW, THEREFORE, BE IT ENACTED BY THE CITY COMMISSION OF THE CITY OF DELTONA, FLORIDA, as follows:

Section 1. Located in the City of Deltona, Florida, the zoning for the following property is hereby amended to C-1: Begin At The Southwest Corner Of The Southeast 1/4 Of The Northwest 1/4 Of Section 8, Township 18 South, Range 31 East; Thence Run North 01 Degrees 15 Minutes 35 Seconds West 2262.68 Feet To The Southerly Right-Of-Way Line Of State Road 444, Thence Run Easterly Along Said Right-Of-Way Line 295.17 Feet To The Point Of

Beginning; Thence Run North 88 Degrees 44 Minutes 00 Seconds East 200 Feet; Thence Run South 01 Degrees 16 Minutes 00 Seconds East 1100 Feet Thence Run South 88 Degrees 44 Minutes 00 Seconds West 200 Feet; Thence Run North 01 Degrees 16 Minutes 00 Seconds West 1100 Feel To The Point Of Beginning. (Less The Southerly 440 Feet Thereof.)

Section 2. This Ordinance is adopted in conformity with and pursuant to the Comprehensive Plan of the City of Deltona, the Local Planning and Land Development Act, Sections 163.161 et. seq., Florida Statues, and the Municipal Home Rule Powers Act et. seq., Florida Statues.

Section 3. Conflicts. Any and all Ordinances or parts of Ordinances in conflict herewith are hereby repealed.

Section 4. Severability. If any provision of this Ordinance or the application thereof to any person or circumstance is held invalid, the invalidity shall not affect other provisions or applications of the Ordinance which can be given effect without the invalid provision or application, and to this end the provisions of this Ordinance are declared severable.

Section 5. Effective Date. This Ordinance shall take effect immediately upon its final adoption by the City Commission.

PASSED AND ADOPTED BY THE CITY COMMISSION OF THE CITY OF DELTONA, FLORIDA THIS _____ DAY OF _____, 2017.

First Reading: _____

Advertised: _____

Second Reading: _____

BY: _____
JOHN C. MASIARCZYK, SR., Mayor

ATTEST:

_____
JOYCE RAFTERY, CMC, MMC, City Clerk

Approved as to form and legality
for use and reliance of the City of
Deltona, Florida

_____

GRETCHEN R. H. VOSE, City Attorney

Staff Report

To: **Planning and Zoning Board**

From: **Scott McGrath, CFM**

Date: **October 25, 2016**

Re: **Ordinance No. 32-2016, 3151 Howland Boulevard, RZ16-003**

A. Summary of Application:

Applicant: AB & J LLC.
David K. Yoon, Managing Member
926 Saxon Blvd.
Orange City, FL 32763

Request:

Tax Parcel No.: 8108-00-00-0051

Property Acreage: ± 1.67Acres

Property Location: 3151 Howland Boulevard

Legal Description: Begin At The Southwest Corner Of The Southeast 1/4 Of The Northwest 1/4 Of Section 8, Township 18 South, Range 31 East; Thence Run North 01 Degrees 15 Minutes 35 Seconds West 2262.68 Feet To The Southerly Right-Of-Way Line Of State Road 444, Thence Run Easterly Along Said Right-Of-Way Line 295.17 Feet To The Point Of Beginning; Thence Run North 88 Degrees 44 Minutes 00 Seconds East 200 Feet; Thence Run South 01 Degrees 16 Minutes 00 Seconds East 1100 Feet Thence Run South 88 Degrees 44 Minutes 00 Seconds West 200 Feet; Thence Run North 01 Degrees 16 Minutes 00 Seconds West 1100 Feel To The Point Of Beginning. (Less The Southerly 440 Feet Thereof.)

B. Existing Zoning: General Commercial C-2

C. Background: The City has received an application to rezone 1.67+/- acres located east of the intersection of Wolf Pack Run and Howland Boulevard. This property is commonly known as

the Jena Medical Building or Health Department building. The subject property is currently zoned C-2. The applicant is seeking the C-1 zoning to allow a house of worship, a church is interested in renting one of the suites.

D. Support Information

Public Facilities:

a. Potable Water: to is supplied by Volusia County
b. Sanitary Sewer: to is supplied by Volusia County
c. Fire Protection: Deltona Fire Station 65
d. Law Enforcement: Volusia County Sheriff's Office (VCSO)
e. Electricity: Duke Energy

E. Matters for Consideration:

Section 110-1101, Code of City Ordinances, states that the City shall consider the following matters when reviewing applications for amendments to the Official Zoning Map:

1. Whether it is consistent with all adopted elements of the Comprehensive Plan.

The Future Land Use Category for the property is Commercial (C). According to the Land Use/Zoning Matrix (Table 110-16), the proposed C-1 zoning is a preferred and compatible zoning classification that could be applied to land designated with the Commercial Land Use category.

OBJECTIVE FLU1-7
The City of Deltona shall appropriately allocate land uses to adequately meet the current and future population needs while maximizing land use compatibility. The City shall promote a variety of land uses including residential, commercial, industrial, pedestrian oriented mixed-use, recreational, conservation, and public facilities. 9J-5.006(3)(b)(1)

The owner has had significant difficulty leasing the space. Amending the zoning of the subject property allows the owner increased flexibility to meet market demand for commercial space to meet the current needs of the population.

2. Its impact upon the environment or natural resources.

The subject property is developed with three commercial buildings. No changes to the existing development are planned at this time. The development will not affect the environment or natural resources.

According to the current official FEMA FIRM maps (dated 2/19/2014), the site is free of the 100-Year Flood Plain.

3. **Its impact upon the economy of any affected area.**

   The proposed zoning amendment will have little to no effect on the area. This amendment will change the principal permitted uses slightly and would allow a house of worship to locate in one of the suites. A house of worship not allowed in the existing C-2 zoning.

4. **Notwithstanding the provisions of Article XIV of the Land Development Code, Ordinance No. 92-25 [Chapter 86, Code of Ordinances] as it may be amended from time to time, its impact upon necessary governmental services, such as schools, sewage disposal, potable water, drainage, fire and police protection, solid waste or transportation systems.**

   a. **Schools:** The zoning amendment will not have a negative impact on the local schools or school district

   b. **Sewage Disposal:** The proposed development is already connected to Volusia County sewers. Ample capacity is available.

   c. **Potable Water:** The proposed development is already connected to Volusia County water. Ample capacity is available.

   d. **Drainage:** All stormwater will be stored on site through a combination of underground vault storage system and an open retention/detention area.

   e. **Transportation Systems:** The subject property is already developed with three commercial units. No changes to the existing development are planned at this time. This amendment will have minimal, if any impacts on the City's transportation system.

5. **Any changes in circumstances or conditions affecting the area:**

   In the last 5-10 years the western portion of Howland Boulevard has seen an increase in commercial development. Development has been slow but steady, with about one new commercial development each year. Most of the new development falls into the C-1 and C-2 category, compatible with this amendment request. Therefore the request for C-1 zoning is appropriate.

   The property is located in the vicinity of numerous institutional uses: a school and 4 houses of worship. Therefore supplemental separation requirements should have

no impact on the future development of the properties located near the subject property.

6. **Any mistakes in the original classification:**

   No known mistakes.

7. **Its effect upon the public health, welfare, safety, or morals.**

   The site is developed and little will change by amending the zoning for this site. Staff finds that the change from C-2 to C-1 will have no negative effects on the public health, welfare, safety or morals of the City.

CONCLUSION/STAFF RECOMMENDATION:

The proposed rezoning is consistent with the Comprehensive Plan and will have no negative affect on existing public infrastructure (roads, central water and sewer). Staff recommends that the Planning and Zoning Board recommended approval to the City Commission of RZ16-003 and Ordinance No. 32-2016.

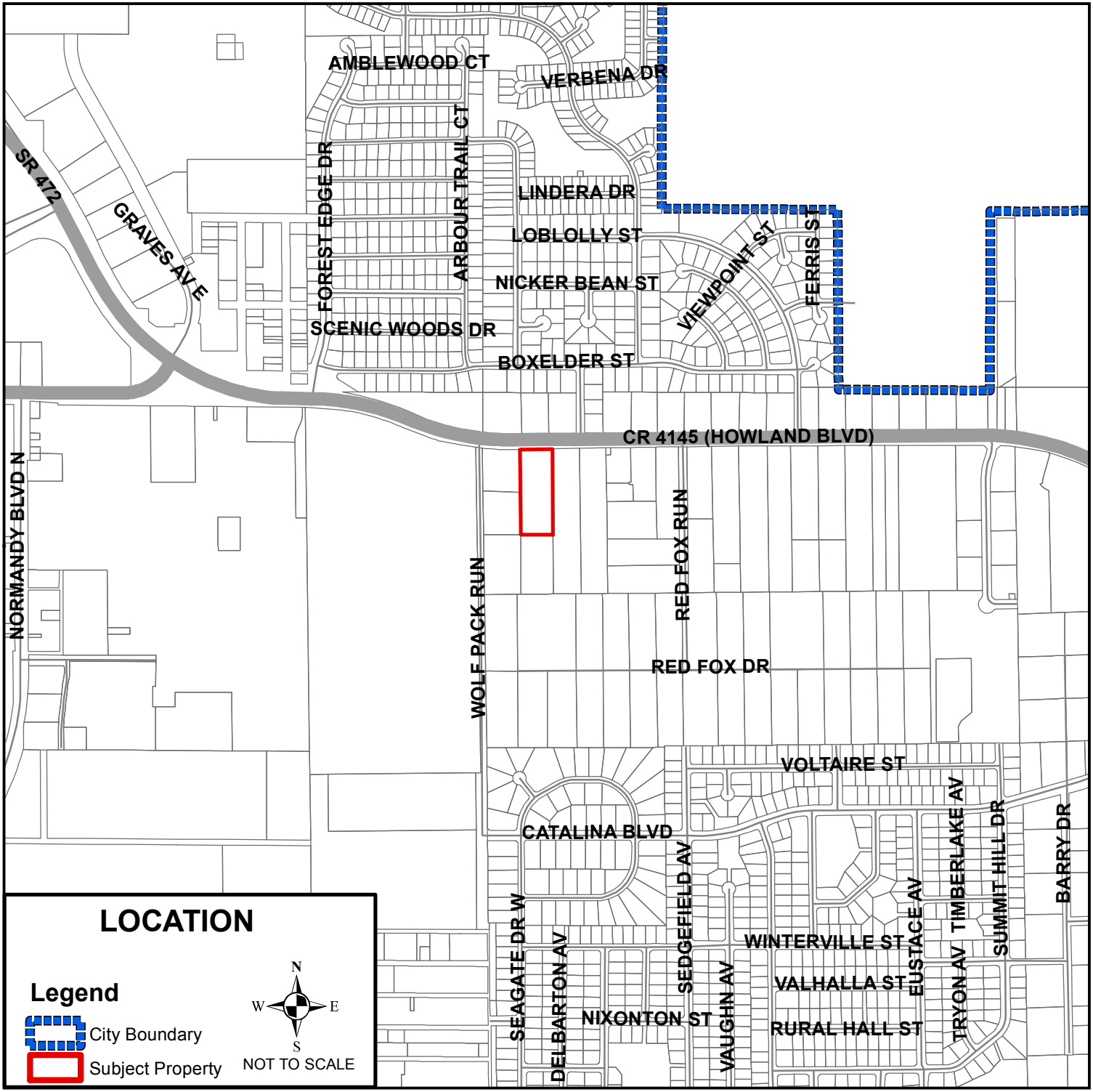
LOCATION
Legend
City Boundary
Subject Property
N
W
E
S
NOT TO SCALE
AMBLEWOOD CT
VERBENA DR
SR 472
GRAVES AV E
FOREST EDGE DR
ARBOUR TRAIL CT
LINDERA DR
LOBLOLLY ST
NICKER BEAN ST
SCENIC WOODS DR
BOXELDER ST
VIEWPOINT ST
FERRIS ST
CR 4145 (HOWLAND BLVD)
NORMANDY BLVD N
WOLF PACK RUN
RED FOX RUN
RED FOX DR
VOLTAIRE ST
CATALINA BLVD
SEAGATE DR W
DELBARTON AV
SEDGEFIELD AV
VAUGHN AV
NIXONTON ST
WINTERVILLE ST
VALHALLA ST
RURAL HALL ST
EUSTACE AV
TRYON AV
TIMBERLAKE AV
SUMMIT HILL DR
BARRY DR

CR 4145 (HOWLAND BLVD)
WOLF PACK RUN
AERIAL PHOTO
Legend
City Boundary
Subject Property
N
W
E
S
NOT TO SCALE

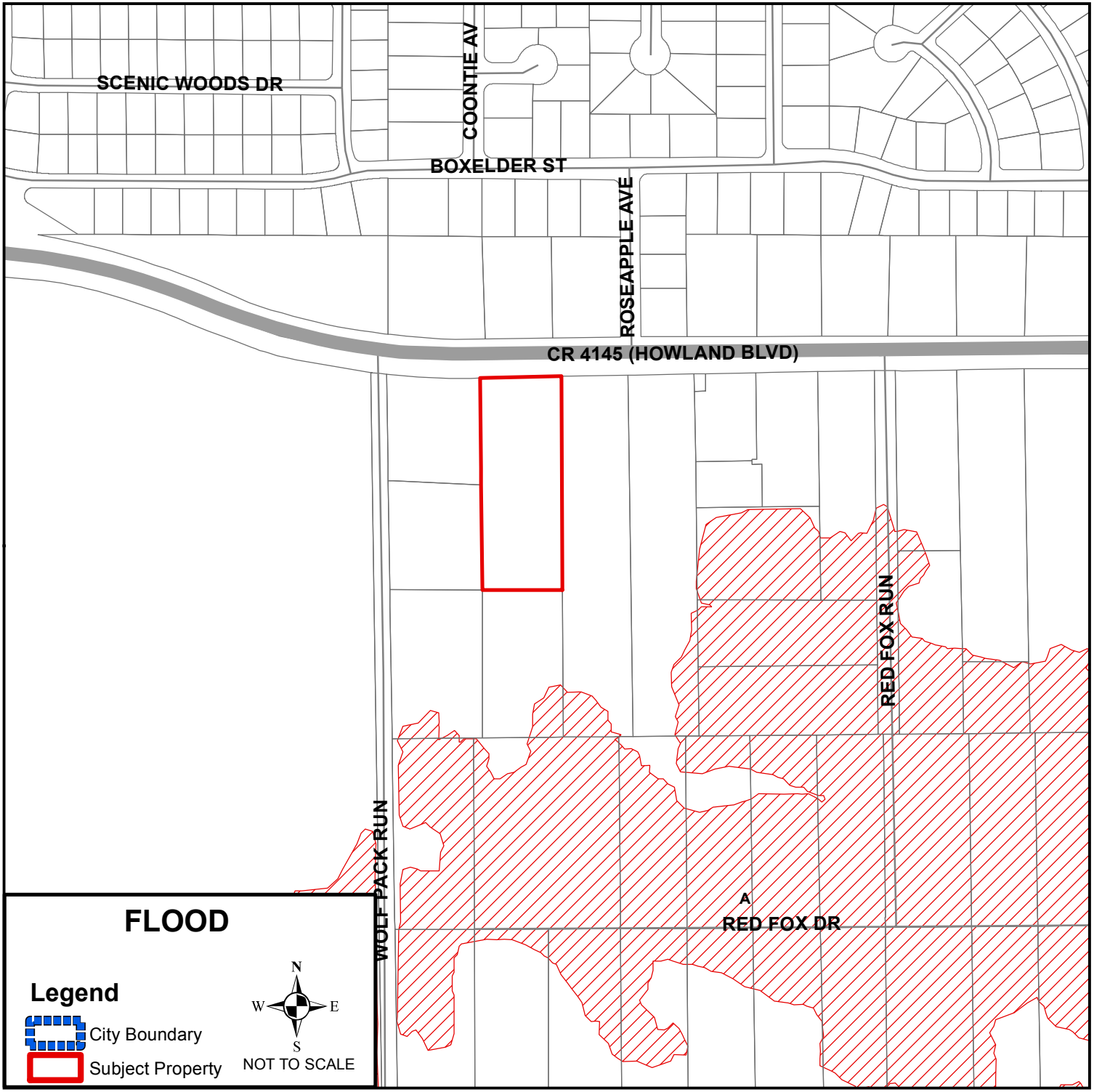
SCENIC WOODS DR
COONTIE AV
BOXELDER ST
ROSEAPPLE AVE
CR 4145 (HOWLAND BLVD)
RED FOX RUN
WOLF PACK RUN
A
RED FOX DR
FLOOD
Legend
City Boundary
Subject Property
N
W
E
S
NOT TO SCALE

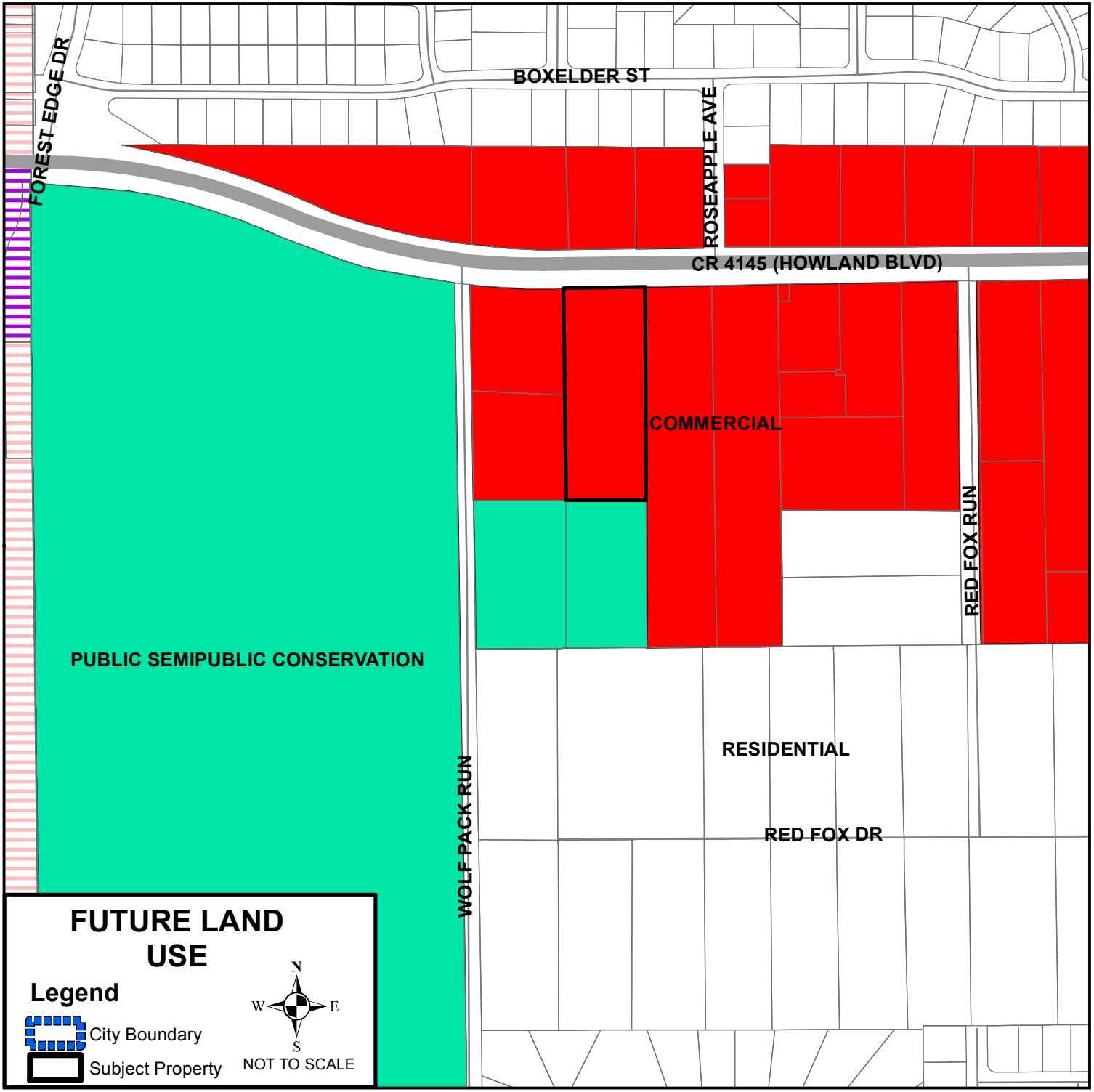
BOXELDER ST
FOREST EDGE DR
ROSEAPPLE AVE
CR 4145 (HOWLAND BLVD)
COMMERCIAL
RED FOX RUN
PUBLIC SEMIPUBLIC CONSERVATION
RESIDENTIAL
WOLF PACK RUN
RED FOX DR
FUTURE LAND USE
Legend
City Boundary
Subject Property
N
W
E
S
NOT TO SCALE

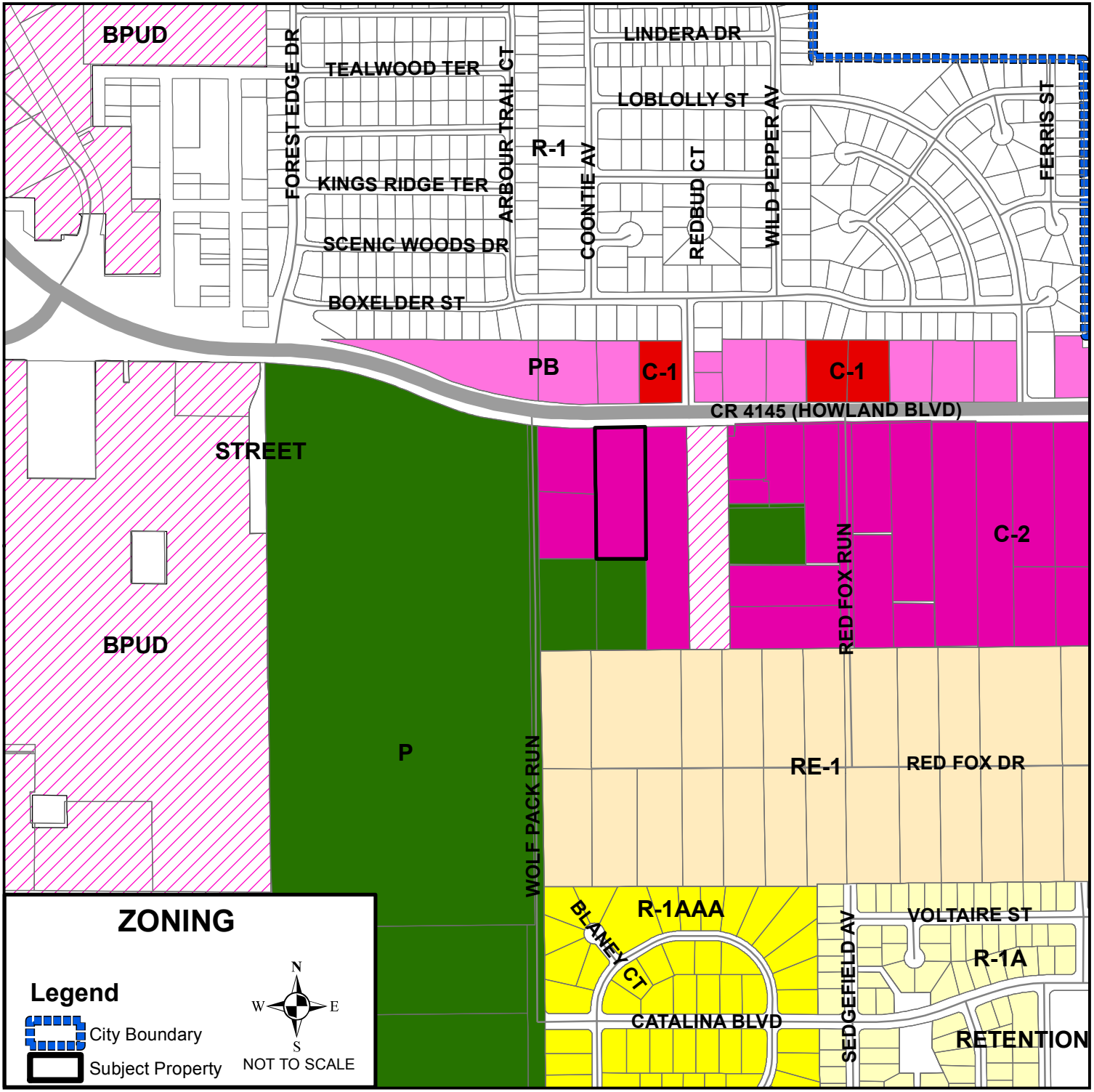
BPUD
FOREST EDGE DR
TEALWOOD TER
ARBOUR TRAIL CT
LINDERA DR
LOBLOLLY ST
R-1
COONTIE AV
REDBUD CT
WILD PEPPER AV
FERRIS ST
KINGS RIDGE TER
SCENIC WOODS DR
BOXELDER ST
PB
C-1
C-1
CR 4145 (HOWLAND BLVD)
STREET
C-2
RED FOX RUN
BPUD
P
WOLF PACK RUN
RE-1
RED FOX DR
R-1AAA
BLANEY CT
SEDGEFIELD AV
VOLTAIRE ST
R-1A
CATALINA BLVD
RETENTION
ZONING
Legend
City Boundary
Subject Property
N
W
E
S
NOT TO SCALE

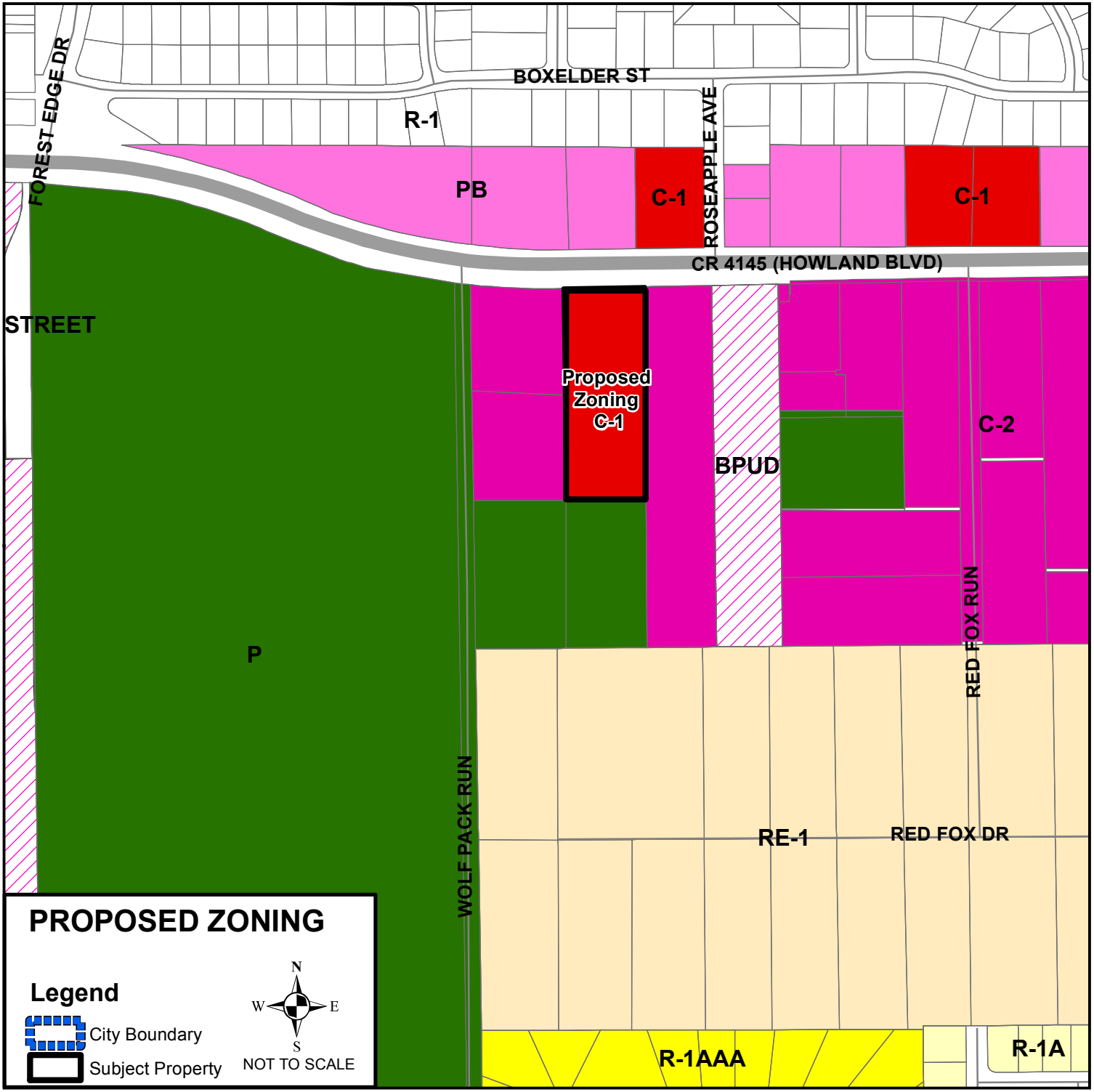
BOXELDER ST
FOREST EDGE DR
R-1
PB
C-1
ROSEAPPLE AVE
C-1
CR 4145 (HOWLAND BLVD)
STREET
Proposed Zoning C-1
BPUD
C-2
P
RED FOX RUN
WOLF PACK RUN
RE-1
RED FOX DR
R-1AAA
R-1A
PROPOSED ZONING
Legend
City Boundary
Subject Property
N
W
E
S
NOT TO SCALE

City of Deltona

2345 Providence Blvd.
Deltona, FL 32725

Agenda Memo

AGENDA ITEM: D.

TO: Mayor and Commission **AGENDA DATE:** 12/12/2016

FROM: Jane K. Shang, City Manager **AGENDA ITEM:** 9 - D

SUBJECT:
Request for approval to transfer funds and position from the Legal Department to the Building and Enforcement Services Department - Dale Baker, Deputy City Manager 386-878-8852.

Strategic Goal: Internal and External Communications

LOCATION:
N/A

BACKGROUND:
Originally the position who conducts lien searches and releases of liens was in the Building and Enforcement Services Department. In FY 10/11 the position was transferred to the Legal Department. With the upcoming retirement of Sheri Sallade we are proposing to transfer the position back to the Building and Enforcement Services Department along with the funding for the position. This transfer reduces the staffing level in the Legal Department by one (1) and increases the staffing level in Building and Enforcement Services by one (1). There is no net increase to the FY 16/17 budget as a result of the requested transfer.

COST:
Transfer $48,000 - This transfer results in no change in budget fund balance.

SOURCE OF FUNDS:
N/A - No additional cost.

ORIGINATING DEPARTMENT:
City Manager

STAFF RECOMMENDATION PRESENTED BY:
Dale Baker, Deputy City Manager - approve the transfer of the lien search and release position from the Legal Department to the Building and Enforcement Services Department and to approve Resolution 2016-67 to fund the transfer.

POTENTIAL MOTION:
“I move to approve the transfer of the lien search and release position from the Legal Department to the Building and Enforcement Services Department and to approve Resolution 2016-67 to fund the transfer.”

powered by Legistar™

RESOLUTION NO. 2016-67

A RESOLUTION OF THE CITY COMMISSION OF THE CITY OF DELTONA, FLORIDA; AMENDING THE ANNUAL GENERAL FUND BUDGET FOR THE FISCAL YEAR BEGINNING OCTOBER 1, 2016, AND ENDING SEPTEMBER 30, 2017 BY ADJUSTING REVENUE AND EXPENSES; REPEALING ALL RESOLUTIONS OR PARTS OF RESOLUTIONS IN CONFLICT HEREWITH; AND PROVIDING FOR AN EFFECTIVE DATE.

WHEREAS, on September 19, 2016, the City Commission adopted a budget for the 2016-2017 fiscal year specifying certain projected revenues and expenditures; and

WHEREAS, from time-to-time circumstances and events may require the original budget to be revised; and

WHEREAS, Section 6.3 of the Charter of the City of Deltona, Florida provides for Appropriation Amendments During the Fiscal Year upon written request of the City Manager, and the City Council may, by resolution approve (a) Supplemental Appropriations, (b) Reduction of Appropriations, and (c) Transfer of Appropriations; and

WHEREAS, based on a review, the City Manager has delivered a recommended budget amendment for the 2016-2017 fiscal year; and

NOW, THEREFORE, BE IT RESOLVED BY THE CITY COMMISSION OF THE CITY OF DELTONA, FLORIDA, as follows:

Section 1. That the annual operating budget of the General Fund of the City of Deltona as adopted for the fiscal year beginning October 1, 2016, is hereby revised and amended to provide for transfer of appropriations as provided in Exhibit "A" attached hereto and incorporated herein by this reference.

Section 2. That all resolutions or parts of resolutions in conflict herewith be repealed.

Section 3. This resolution shall take effect immediately upon its final adoption by the City Commission.

PASSED AND ADOPTED BY THE CITY COMMISSION OF THE CITY OF DELTONA, FLORIDA, THIS _____ DAY OF _____, 2015.

BY: _____
JOHN C. MASIARCZYK, SR., Mayor

ATTEST:

_____
JOYCE RAFTERY, City Clerk

Approved as to form and legality for use and reliance of the City of Deltona, Florida:

_____
GRETCHEN R.H. VOSE, City Attorney

City of Deltona

Exhibit A

Budget Transfer

Fiscal Year 2016-2017

Amendment #: 2017-11 Date: December 12, 2016

Fund: General Agenda Item:

			Increase	Decrease
Account #:	001196 511200	Amount:	34,000	
Description:	SALARIES & WAGES			
Account #:	001196 512100	Amount:	2,400	
Description:	FICA TAXES			
Account #:	001196 512200	Amount:	2,500	
Description:	RETIREMENT CONTRIBUTIONS			
Account #:	001196 512300	Amount:	8,100	
Description:	HEALTH/DENTAL/LIFE INSURANCE			
Account #:	001196 512400	Amount:	1,000	
Description:	WORKERS COMPENSATION			
Account #:	001140 511200	Amount:		34,000
Description:	SALARIES & WAGES			
Account #:	001140 512100	Amount:		2,400
Description:	FICA TAXES			
Account #:	001140 512200	Amount:		2,500
Description:	RETIREMENT CONTRIBUTIONS			
Account #:	001140 512300	Amount:		8,100
Description:	HEALTH/DENTAL/LIFE INSURANCE			
Account #:	001140 512400	Amount:		1,000
Description:	WORKERS COMPENSATION			

Description: This amendment results in no change in Budgetary Fund Balance.

Reason: **To fund position transfer from Legal Department to Code Enforcement.**

ATTEST:

John C. Masiarczyk, Sr., Mayor

Joyce Raftery, City Clerk

City of Deltona

2345 Providence Blvd.
Deltona, FL 32725

Agenda Memo

AGENDA ITEM: E.

TO: Mayor and Commission **AGENDA DATE:** 12/12/2016

FROM: Jane K. Shang, City Manager **AGENDA ITEM:** 9 - E

SUBJECT:
Request for Approval of Resolution No. 2016-68, Adopting the Facilities Plan, Capital Financing Plan, Certified Minutes from the Public Meeting held on November 15, 2016 and Authorizing submission of the Plan to the Florida Department of Environmental Protection (FDEP) for the Alexander Avenue Reclaimed Water Augmentation (known as Lake Monroe Project Phase 4A and 4B) - Matt Doan, P.E., Acting Public Works Director (386) 878-8973

Strategic Goal: Infrastructure

LOCATION:
Alexander Ave. Water Management Site

BACKGROUND:
As recently approved, the City of Deltona has entered into a cost share agreement with the St. Johns River Water Management District (SJRWMD) to secure available grant funding for the Lake Monroe Project Phase 4A and 4B.

The City of Deltona is seeking consideration for a low-interest State Revolving Fund (SRF) loan in the amount of approximately $13,267,000 based upon preliminary planning estimates, to facilitate funding of this project. This action supports the City's intent to secure the lowest cost funding available.

Adopting Resolution No. 2016-68 authorizes the following:
Adoption of the Facilities Plan dated October 2016; Capital Financing Plan; Certified Minutes from the Public Meeting held on November 15, 2016; authorizes the submission of the Plan to FDEP; and designates the authorized representative and provides an effective date.

COST:
$13,267,000 (principal)

SOURCE OF FUNDS:
Enterprise Funds (SRF)

ORIGINATING DEPARTMENT:
Public Works / Utilities

powered by Legistar™

AGENDA ITEM: E.

STAFF RECOMMENDATION PRESENTED BY:
Matt Doan, P.E., Acting Public Works Director - Recommends approval of Resolution No. 2016-68, Adopting the Facilities Plan, Capital Financing Plan, Certified Minutes from the Public Meeting held on November 15, 2016 and Authorizing the submission of the Plan to the FDEP for the Lake Monroe Project Phase 4A and 4B.

POTENTIAL MOTION:
“I move to approve Resolution No. 2016-68, Adopting the Facilities Plan, Capital Financing Plan, Certified Minutes from the Public Meeting held on November 15, 2016 and Authorizing the submission of the Plan to the FDEP for the Lake Monroe Project Phase 4A and 4B.

RESOLUTION NO. 2016-68

A RESOLUTION OF THE CITY COMMISSION OF THE CITY OF DELTONA, FLORIDA, A POLITICAL SUBDIVISION OF THE STATE OF FLORIDA: ADOPTING THE DELTONA ALEXANDER AVENUE RECLAIMED WATER AUGMENTATION PROJECT FACILITIES PLAN DATED OCTOBER 2016; ADOPTING THE DELTONA ALEXANDER AVENUE RECLAIMED WATER AUGMENTATION PROJECT CAPITAL FINANCING PLAN; AUTHORIZING SUBMISSION OF THE PLAN TO THE FLORIDA DEPARTMENT OF ENVIROMENTAL PROTECTION (FDEP); AND DESIGNATING THE AUTHORIZED REPRESENTATIVE AND PROVIDING AN EFFECTIVE DATE.

WHEREAS, the City of Deltona, a political subdivision of the State of Florida determined that the project recommended in the Deltona Alexander Avenue Reclaimed Water Augmentation (known also as Lake Monroe Project Phase 4A & 4B) Facilities Plan dated October 2016 is in the best interest of its citizens; and

WHEREAS, the City of Deltona is seeking funding from the Florida Department of Environmental Protection (FDEP) under its State Revolving Fund Program to fund the subject improvements to benefit City of Deltona's Water/Sewer customers; and

WHEREAS, staff has requested that the City Commission approve the Deltona Alexander Avenue Reclaimed Water Augmentation (known also as Lake Monroe Project Phase 4A & 4B) Facilities Plan dated October 2016 and Capital Financing Plan in accordance with the State Revolving Fund's requirements.

NOW, THEREFORE, BE IT RESOLVED BY THE CITY COMMISSION OF THE CITY OF DELTONA, FLORIDA as follows:

SECTION 1. The Deltona Alexander Avenue Reclaimed Water Augmentation (known also as Lake Monroe Project Phase 4A & 4B) Facility Plan dated October 2016, as was summarized and discussed at a public information meeting of the City of Deltona, is hereby adopted.

SECTION 2. The Deltona Alexander Avenue Reclaimed Water Augmentation (known also as Lake Monroe Project Phase 4A & 4B) Facility Capital Financing Plan, as was summarized and discussed at a public information meeting of the City of Deltona, is hereby adopted.

SECTION 3. The City Commission hereby authorizes the submission of this Plan to the State of Florida Department of Environmental Protection.

SECTION 4. The City Manager is hereby authorized to carry out the responsibilities under this Loan Program and to delegate authority and responsibility to staff to carry out all activities to accomplish the goals of the Loan Program.

SECTION 5. This Resolution shall take effect upon adoption by the Commission.

ADOPTED BY the City Commission of the City of Deltona, Florida this ____day of December, 2016.

_____
JOHN C. MASIARCZYK SR., MAYOR

ATTEST:

_____
JOYCE RAFTERY, CITY CLERK

Approved as to form and legality for use
and reliance by the City of Deltona, Florida

_____
GRETCHEN R. H. VOSE, CITY ATTORNEY

CAPITAL FINANCING PLAN

WW-02b

City of Deltona
(Project Sponsor)
Jane Shang, City Manager
(Authorized Representative and Title)
Deltona, FL 32725
(City, State, and Zip Code)

Robert Clinger, Finance Director, 386-878-8552
(Capital Financing Plan Contact, Title and Telephone Number)

2345 Providence Blvd.
(Mailing Address)

Deltona, FL 32725
(City, State, and Zip Code)

The Department needs to know about the financial capabilities of potential State Revolving Fund (SRF) loan applicants. Therefore, a financial capability demonstration (and certification) is required well before the evaluation of the actual loan application.

The sources of revenues being dedicated to repayment of the SRF loan are Utility Operations

(Note: Projects pledging utility operating revenues should attach a copy of the existing/proposed rate ordinance)

Estimate of Proposed SRF Loan Debt Service

Capital Cost*	**13,267,000**
Loan Service Fee (2% of capital cost)	**265,340**
Subtotal	**13,532,340**
Capitalized Interest**	**45,108**
Total Cost to be Amortized	**13,577,448**
Interest Rate***	**0.50%**
Annual Debt Service	**715,076**
Annual Debt Service Including Coverage Factor****	**822,337**

* Capital Cost = Allowance + Construction Cost (including a 10% contingency) + Technical Services after Bid Opening.

** Estimated Capitalized Interest = Subtotal times Interest Rate times construction time in years divided by two.

***20 GO Bond Rate times Affordability Index divided by 200.

**** Coverage Factor is generally 15%. However, it may be higher if other than utility operating revenues are pledged.

SCHEDULE OF PRIOR AND PARITY LIENS

List annual debt service beginning two years before the anticipated loan agreement date and continuing at least fifteen fiscal years. Use additional pages as necessary.

IDENTIFY EACH OBLIGATION

#1 Utility System Revenue Bonds, Series 2013 **Coverage 110%** **Insured (Yes/No)**		**#2 Utility System Revenue Bonds, Series 2014** **Coverage 110%** **Insured (Yes/No)**		**#3 Clean Water SRF Loan** **Coverage 115%** **Insured (Yes/No) No**	
#4 **Coverage %** **Insured (Yes/No)**		**#5** **Coverage %** **Insured (Yes/No)**		**#6** **Coverage %** **Insured (Yes/No)**	

Fiscal Year	Annual Debt Service (Principal + Interest)						Total Non-SRF Debt Service w/coverage	Total SRF Debt Service w/coverage
	#1	#2	#3	#4	#5	#6		
2015	5,416,686						5,958,355	
2016	5,413,431	703,915	913,476				6,729,081	1,050,497
2017	5,416,831	889,156	1,826,952				6,936,586	2,100,995
2018	5,616,581	1,349,156	1,826,952				7,662,311	2,100,995
2019	5,611,181	1,350,356	1,826,952				7,657,691	2,100,995
2020	5,612,981	1,346,106	1,826,952				7,654,996	2,100,995
2021	5,611,231	1,346,706	1,826,952				7,653,731	2,100,995
2022	5,610,156	1,346,506	1,826,952				7,652,329	2,100,995
2023	5,613,656	1,350,506	1,826,952				7,660,579	2,100,995
2024	5,611,406	1,348,506	1,826,952				7,655,904	2,100,995
2025	5,612,256	1,350,706	1,826,952				7,659,259	2,100,995
2026	5,613,506	1,346,906	1,826,952				7,656,454	2,100,995
2027	5,611,806	1,351,156	1,826,952				7,659,259	2,100,995
2028	5,612,900	1,346,656	1,826,952				7,655,512	2,100,995
2029	5,610,900	1,350,875	1,826,952				7,657,953	2,100,995
2030	5,612,794	1,349,313	1,826,952				7,658,317	2,100,995
2031	5,612,431	1,346,238	1,826,952				7,654,536	2,100,995
2032	5,613,144	1,346,600	1,826,952				7,655,718	2,100,995
2032	5,614,406	1,350,175	1,826,952				7,661,039	2,100,995
2034	5,615,156	1,347,700	1,826,952				7,659,142	2,100,995
2035	5,561,406	1,349,350	1,826,952				7,601,832	2,100,995
2036	5,565,256	1,349,950	913,476				7,606,727	1,050,497
2037	5,563,088	1,346,450					7,600,491	
2038	5,564,644	1,345,950					7,601,653	
2039	5,564,156	1,348,200					7,603,592	
2040	5,561,113	1,347,950					7,599,969	

SCHEDULE OF ACTUAL REVENUES AND DEBT COVERAGE FOR PLEDGED REVENUE

(Provide information for the two fiscal years preceding the anticipated date of the SRF loan agreement)

		FY 2014	FY 2015
(a)	Operating Revenues (Identify)		
	Charges for Services	15,719,899	16,733,328
	Fees and Services	266,720	278,040
(b)	Interest Income	38,539	73,985
(c)	Other Incomes or Revenues (Identify)		
	Miscellaneous Revenue	863,034	910,635
	Non-Operating Revenue	789,111	2,516,035
(d)	Total Revenues	17,677,303	20,512,023
(e)	Operating Expenses (excluding interest on debt, depreciation, and other non-cash items)	7,702,182	7,769,149
(f)	**Net Revenues (f = d – e)**	9,975,121	12,742,874
(g)	Debt Service (including coverage) Excluding SRF Loans	2,430,472	6,076,406
(h)	Debt Service (including coverage) for Outstanding SRF Loans	0	0
(i)	**Net Revenues After Debt Service (i = f – g – h)**	**7,544,649**	**6,666,468**

Source:
Notes:

SCHEDULE OF PROJECTED REVENUES AND DEBT COVERAGE
FOR PLEDGED REVENUE
(Begin with the fiscal year preceding first anticipated semiannual loan payment)

		FY 2018	FY 2019	FY 2020	FY 2021	FY 2022
(a)	Operating Revenues (Identify)					
	Charges for Services	19,475,000	20,351,000	21,267,000	22,224,000	23,224,000
	Fees and Services	268,000	276,000	284,000	293,000	302,000
(b)	Interest Income	62,000	63,000	64,000	65,000	66,000
(c)	Other Incomes or Revenues (Identify)					
	Miscellaneous Revenue	862,000	871,000	880,000	889,000	898,000
	Non-operating Revenue	2,525,000	2,500,000	1,250,000		
(d)	Total Revenues	**23,192,000**	**24,061,000**	**23,745,000**	**23,471,000**	**24,490,000**
(e)	Operating Expenses[1]	10,235,000	10,542,000	10,858,000	11,184,000	11,520,000
(f)	**Net Revenues (f = d - e)**	**12,957,000**	**13,519,000**	**12,887,000**	**12,287,000**	**12,970,000**
(g)	Existing Debt Service on Non-SRF Projects (including coverage)	7,662,311	7,657,691	7,654,996	7,653,731	7,652,328
(h)	Existing SRF Loan Debt Service (including coverage)	2,100,995	2,100,995	2,100,995	2,100,995	2,100,995
(i)	**Total Existing Debt Service (i = g + h)**	**9,763,306**	**9,758,686**	**9,755,991**	**9,754,726**	**9,753,323**
(j)	Projected Debt Service on Non-SRF Future Projects (including coverage)					
(k)	Projected SRF Loan Debt Service (including coverage)	0	822,337	822,337	822,337	822,337
(l)	**Total Debt Service (Existing and Projected) (l = i + j + k)**	**9,763,306**	**10,581,023**	**10,578,328**	**10,577,063**	**10,575,660**
(m)	**Net Revenues After Debt Service (m = f – l)**	**3,193,694**	**2,937,977**	**2,308,672**	**1,709,937**	**2,394,340**

Source:

Notes: (i.e. rate increases, explanations, etc.)
1. For existing and proposed facilities, excluding interest on debt, depreciation, and other non-cash items.

CERTIFICATION

I, Robert Clinger, certify that I have reviewed the information
Chief Financial Officer (please print)

included in the preceding capital financing plan worksheets, and to the best of my knowledge, this information accurately reflects the financial capability of City of Deltona
Project Sponsor

I further certify that City of Deltona has the financial capability to ensure
Project Sponsor

adequate construction, operation, and maintenance of the system, including this SRF project.

Robert Clinger
Signature

11/28/16
Date

Certified

City of Deltona

2345 Providence Blvd.
Deltona, FL 32725

Minutes

PUBLIC INFORMATION MEETING
LAKE MONROE 4A & 4B PROJECTS

Tuesday, November 15, 2016 5:30 PM Commission Chambers

1. CALL TO ORDER:

The meeting was called to order at 5:40 p.m. by Acting Public Works/Deltona Water Director Matt Doan.

2. PROJECT OVERVIEW – CITY STAFF AND CONSULTANT:

Public Works/Deltona Water Director Matt Doan introduced Senior Project Manager for Tetra Tech Daniel Allen who gave a brief Power Point Presentation on the Project 4 – Alexander Avenue Reclaimed Water Augmentation Project which included an outline, why are we here?, the project justification, the project location, an overview, existing Stormwater sources, water quality goal and treatment needs, key Project 4A components, Project 4B, and the environmental impacts.

3. PROJECT COSTS – CITY CONSULTANT:

Tetra Tech's Project Manager, Andrew Woodcock, continued the Power Point Presentation and went over the Project Cost and Schedule which included Project 4A costs, the project funding and the schedule of the project.

4. PUBLIC COMMENTS:

Larry Kent, 235 River Village Dr., Debary, spoke about restricted areas running down to Lake Monroe, he asked if this included distribution systems to get the water out, hearing about reuse water for years, witnessing pipes being placed along Doyle Road, and the assumption the pipes where being used for sewage treatment to make the sewage reusable.

Mr. Doan replied the best way to look at this is to treat this like it is a third wastewater plant except that it is not treating wastewater. It will be its own source and that is the value of the project, it would create a new water quantity of reclaimed water.

Certified

Larry Kent, 235 River Village Dr., Debary, asked if the intent was, in the future, for all residences to have access to reuse water because he does not see the branches to do so off the main system.

Mr. Doan replied there are separate projects budgeted for tying in the dry line communities at Coventry Subdivision and Live Oak Subdivision. There is another reclaimed water extension project going to the Dewey O' Boster Sports Complex to utilize reclaimed water at that location.

Larry Kent, 235 River Village Dr., Debary, asked when the projects are added on, as mentioned, what kind of capacity a day the City will be able to use of that four (4) million gallons?

Mr. Doan replied between those projects and the rib site itself the City can use all of it, it is a matter of where it is allocated on a certain day.

Vice Mayor Nabicht, City of Deltona, asked if the Coventry Subdivision was on sewer and why this subdivision was chosen instead of Twin Lakes?

Mr. Doan replied Twin Lakes already has it and staff took the closest proximity projects that were dry line and that could be done cost effectively.

Vice Mayor Nabicht, City of Deltona, asked what the advantage of the project is to the City and he asked staff to discuss the bulk rate to include what will be sold to Debary and Sanford?

Mr. Doan replied a rate consultant worked out the rates on the reclaimed specifically and different types of users. There was a rate class for putting water on the ground as a recharge which is the lowest use all the way up to retail on a bulk basis. There would be preferred type customers where it would mutually benefit themselves and the City by guaranteeing a minimum bulk rate every day, such as a large user. There would be two (2) tiered rates, one tier at a $1 per thousand gallons and is for if that entity is selling the water to their customers and the second tier is if the water is going on the ground and will benefit the entire group of West Volusia suppliers and that rate was set at 50¢ per thousand gallons.

Commissioner Honaker, City of Deltona, asked what the cost is to place a distribution center into a neighborhood, dry lines.

Mr. Doan replied it depends on the size of the neighborhood, typically a 6 to 8 inch line would be $20 to $60 a foot and those neighborhoods that needed interconnects would be $200,000 for each project. Also, there are no shared monies between funds, it is

Certified

calculated on the Utility Enterprise Fund and the Stormwater Special Fund is completely separate.

Commissioner Honaker, City of Deltona, asked if the new community center would be using the water from this project.

Mr. Doan replied currently the community center is outside the service area.

5. ADJOURNMENT:

There being no further business the meeting adjourned at 6:08 p.m.

Joyce Raftery, CMC, MMC, City Clerk

STATE OF FLORIDA
COUNTY OF VOLUSIA
This is to certify that the foregoing is a true and correct copy of Minutes of Lake Monroe 4A+4B Project
witness my hand and official Seal this 23rd day of November 20 16

Joyce Raftery, CMC, MMC
City Clerk, City of Deltona Florida

DRAFT

City of Deltona - Clean Water State Revolving Fund Facilities Plan

TETRA TECH

Tt No.: 200-08534-16001

October 2016

City of Deltona

Project 4A and Project 4B – Alexander Avenue Water Management Site Reclaimed Augmentation Facility

Facilities Plan

PRESENTED TO

Clean Water State Revolving Fund Loan Program
2600 Blair Stone Road MS 3505
Tallahassee, FL 32399

PREPARED BY

Tetra Tech
201 E. Pine Street, Suite 1000
Orlando, FL 32801

P: 407-839-3955
F: 407-839-3790
www.tetratech.com

TETRA TECH

#200-08534-16001
October 28, 2016

EXECUTIVE SUMMARY

OBJECTIVE

This Facilities Plan was prepared to meet the requirements of the Clean Water State Revolving Fund (CWSRF) loan funding program for implementing reclaimed water system improvements. The area considered in this plan includes the City of Deltona's (City) reclaimed water service area located in Volusia County. This Facilities Plan describes alternative methods for addressing the identified project within the City's service area and proposes a specific course of action for the subject project in accordance with the State and Federal regulations currently in effect.

The Facilities Plan satisfies the requirements set forth by the Florida Department of Environmental Protection (FDEP), as summarized within Section 62-503.700(2) of the Florida Administrative Code (FAC) for the State Revolving Loan Program. The City is interested in pursuing SRF loan funding to finance Project 4A and Project 4B – Alexander Avenue Water Management Site Reclaimed Augmentation Facility (Project). This project is also known as the Lake Monroe Project, Phase 4A and 4B.

A map of the proposed project location is shown on **Figure ES-1.**

PROJECT DESCRIPTION AND JUSTIFICATION

The City currently relies on groundwater withdrawal, permitted through the St. Johns River Water Management District (SJRWMD), to supply 18.3 million gallons per day (MGD) for public water supply uses. These include residential, commercial/industrial, water utility, landscape irrigation, and unaccounted-for-uses. The permitted daily withdrawal is intended to serve a projected population of approximately 142,000 people by 2033.

As part of the City's permit conditions, allocations from 2019 through 2033 are dependent on timely and complete implementation of specific water supply, alternative water supply, and recharge enhancement projects. The allocations are either additive (implementation of Lower Floridan Aquifer (LFA) wells) or deductive (reclaimed/artificial recharge projects).

To avoid a withdrawal deduction in their consumptive use permit (CUP), the City is required to implement the following:

A. Expand the reclaimed system to 3.2 MGD and implement 7.9 MGD of recharge projects (as part of the West Volusia Water Suppliers (WVWS)) for a combined reclaimed/recharge flow of 11.1 MGD to Blue Spring by December 31, 2019;
B. Expand reclaimed water/aquifer recharge projects to 14.5 MGD (as part of the WVWS) and implement a 1.0 MGD aquifer recharge project to mitigate potential shallow aquifer impacts by December 31, 2023; and
C. Expand the reclaimed water system to 4.2 MGD by December 31, 2030.

The WVWS includes utilities that are faced with future groundwater deficits attributed to minimum flow and level (MFL) projections established by the SJRWMD. The WVWS consists of the City of Deland, the City of Deltona, the City of Orange City, and the Volusia County Utility Department. As part of a cooperative effort with the SJRWMD, ten projects were identified by the WVWS group to offset potable groundwater withdrawals. The projects identified are intended to provide alternative water supplies to meet CUP and MFL requirements.

The Alexander Avenue Water Management Site (WMS) Reclaimed Augmentation Facility, divided into Project 4A and Project 4B, was identified by the WVWS to reduce the City's potable water withdrawal by utilizing alternative water supplies. The Project will allow the City to meet the MFL requirements set forth for Blue Springs and Blue Springs Run, while also meeting the conditions of their current CUP. The City will also utilize the Project as an opportunity to expand their existing reclaimed water system capacity.

Implementing this Project will ultimately reduce demands on the groundwater for irrigation use and position the City as environmental conservation stewards and regional partners in solving regional water supply shortfalls and reducing environmental impacts to natural resources.

The Project will be designed to produce 4.0 MGD of irrigation quality water and includes: a surface water intake and pump station on Lake Monroe, a 24-inch transmission main to the Alexander Avenue WMS, covered storage for raw surface water and stormwater, treatment consisting of coagulation, flocculation, filtration, and disinfection, as well as finished water storage. The proposed project will be constructed in two segments:

- Project 4A - Project 4A will include raw water storage, treatment, and pumping facilities for 4.0 MGD Annual Average Daily Flow (AADF) of stormwater pumped to the Alexander Avenue WMS from Tivoli Wheeling and Leland Drive Stormwater pump stations. There is no surface water in Project 4A.
- Project 4B – Project 4B will include infrastructure needed to withdraw and pump surface water from Lake Monroe to the Alexander Avenue WMS.

Figure ES-2 provides a site plan of the proposed improvements.

PROJECT COST SUMMARY

The Project cost is estimated at $16.8 million, including contingency; however, $1.875 million and $1.875 million of funding has been granted through the SJRWMD cost share and FDEP Springs Protection, respectively. Therefore, a total of $13.0 million is anticipated to be funded through the CWSRF program. **Table ES-1** presents the overall project cost; detailed costs are provided in Section 4.3.

***Table ES-1**. Project Cost*

Description	Project Cost (2016 $USD)
Project 4A	
Project 4A Alexander Ave WMS Reclaimed Water Augmentation Facility	$ 7,266,000
Overhead and Profit	$ 1,090,000
Mobilization/Demobilization & General Requirements	$ 618,000
Contingency	$ 897,000
Technical Services During Construction	$579,000
Project 4A Sub-Total Cost	**$ 10,450,000**
Project 4B	
Project 4B Alexander Ave WMS Reclaimed Water Augmentation Facility	$ 4,620,000
Overhead and Profit	$ 462,000
Mobilization/Demobilization & General Requirements	$ 231,000
Contingency	$ 1,062,600
Project 4B Sub-Total Cost	$ 6,375,600
Project 4A and 4B Cost	**$16,825,600**
Less SJRWMD Cost Share Grant	-$ 1,875,000
Less FDEP Springs Protection Grant	-$ 1,875,000
Anticipated CWSRF Funding	**$ 13,075,600**

Redacted per Florida Statute 119.071 (3) 1

Page 5

CLEAN WATER STATE REVOLVING FUND FACILITIES PLAN PROJECT LOCATION MAP

Redacted per Florida Statute 119.071 (3)b1

PHASE 4B TRANSMISSION MAIN

PROJECT SCHEDULE

Table ES-2 presents a proposed schedule for the selected alternative of the Project including: design completion, permit completion, and construction start and end dates.

Table ES-2. *Project Schedule*

Project Schedule	
Project 4A	
Design Completion	November 2016
Permitting	December 2016
Bidding	January 2017
Construction Start	April 2017
Construction End	July 2018
Construction Period	16 months
Project 4B	
Preliminary Design	January to June 2017
Final Design and Bidding	July to December 2017
Construction Start	January 2018
Construction End	July 2019
Construction Period	18 months

TABLE OF CONTENTS

EXECUTIVE SUMMARY I
Objective i
Project Description and Justification i
Project Cost Summary ii
Project Schedule v
1.0 INTRODUCTION 1
1.1 Objective 1
1.2 Project Location and Background 1
1.2.1 Existing Reclaimed Water System 1
2.0 PROJECT DESCRIPTION AND JUSTIFICATION 4
3.0 ALTERNATIVES ANALYSIS 5
3.1 Alternatives 5
3.1.1 No Action Alternative 5
3.1.2 Alternative Potable Water Supply 5
3.1.3 Alexander Ave WMS Reclaimed Augmentation Facility 6
3.2 Cost Comparion 7
4.0 SELECTED ALTERNATIVE 8
4.1 Existing Facilities 8
4.2 Alexander Ave WMS Recommended Facilities 8
4.2.1 Summary of Recommended Facility 8
4.2.2 Raw Water Ground Storage Tank 8
4.2.3 Raw Water Transfer Pump Station 9
4.2.4 Chemical Conditioning Pretreatment 9
4.2.5 Filtration 9
4.2.6 High-Level Disinfection 10
4.2.7 Finished Water Transfer Pump Station 10
4.2.8 Reclaimed Water Ground Storage Tank 10
4.2.9 Plant Drain Pump Station 11
4.2.10 Other Miscellaneous Improvements 11
4.3 Cost Estimate 11
5.0 ENVIRONMENTAL EFFECTS 13
5.1 Project Benefits 13

5.2 Topography and Surface Waters 13
5.3 Environmentally Sensitive Areas 13
5.3.1 Existing Land Use/Land Cover 17
5.3.2 Endangered/Threatened Species 17
5.4 FEMA Flood Plain Zones 19
6.0 IMPLEMENTATION PLAN 21
6.1 Schedule 21
6.2 Financial Plan 21
6.3 Adopting Resolution 21

LIST OF TABLES

***Table ES-1**. Project Cost* ii
***Table ES-2.** Project Schedule* v
***Table 1-1.** Reclaimed Service Area Summary* 2
***Table 3-1.** Alternative Potable Water Supply - Summary of Capital Costs* 6
***Table 3-2.** Alternative Potable Water Supply – Summary of O&M Costs* 6
***Table 3-3.** Alexander Avenue WMS Reclaimed Augmentation Facility – Summary of Costs* 7
***Table 3-4**. Alternative Cost Analysis* 7
***Table 4-1.** Opinion of Probable Construction Cost* 12
***Table 5-1**. Endangered and Threatened Species in Volusia County* 17
***Table 6-1.** Schedule for Selected Alternative* 21

LIST OF FIGURES

***Figure ES–1.** Project Location Map* iii
***Figure ES–2**. Proposed Site Plan* iv
***Figure 1–1**. Project Location Map* 3
***Figure 5–1**. Land Surface and Water Elevations* 15
***Figure 5–2**. Environmentally Sensitive Areas* 16
***Figure 5–3.** Existing Land Use* 18
***Figure 5–4.** Flood Plain* 20

APPENDICES

APPENDIX A – CAPITAL FINANCING PLAN 22
APPENDIX B – PUBLIC PARTICIPATION HEARING MINUTES AND ADOPTED RESOLUTIONS 23
APPENDIX C – ALEXANDER AVE WMS RECLAIMED AUGMENTATION FACILITY PRELIMINARY DESIGN REPORT 24

ACRONYMS/ABBREVIATIONS

Acronyms/Abbreviations	Definition
AADF	Annual Average Daily Flow
CCC	Chlorine Contact Chambers
City	City of Deltona
CPS	Centipoise
CUP	Consumptive Use Permit
CWSRF	Clean Water State Revolving Fund
FAC	Florida Administrative Code
FDEP	Florida Department of Environmental Protection
FWTPS	Finished Water Transfer Pump Station
GST	Ground Storage Tank
HDPE	High Density Polyethylene
HSP	High Service Pump
LFA	Lower Floridan Aquifer
MDW	Maximum Daily Withdrawal
MFL	Minimum Flow and Level
MG	Million Gallons
MGD	Million Gallons per Day
mg/L	Milligrams per liter
PLC	Programmable Logic Controller
PS	Pump Station
RIB	Rapid Infiltration Basins
RWTPS	Raw Water Transfer Pump Station
SJRWMD	St. Johns River Water Management District
TSS	Total Suspended Solids
USFWS	United States Fish & Wildlife Service
WMS	Water Management Site
WRF	Water Reclamation Facility
WVWS	West Volusia Water Suppliers

1.0 INTRODUCTION

1.1 OBJECTIVE

This Facilities Plan was prepared to meet the requirements of the Clean Water State Revolving Fund (CWSRF) loan funding program for implementing reclaimed water system improvements. The area considered in this plan includes the City of Deltona's (City) reclaimed water service area located in Volusia County. This Facilities Plan describes alternative methods for addressing the identified project within the City's service area and proposes a specific course of action for the subject project in accordance with the State and Federal regulations currently in effect.

The Facilities Plan satisfies the requirements set forth by the Florida Department of Environmental Protection (FDEP), as summarized within Section 62-503.700(2) of the FAC for the State Revolving Loan Program. The City is interested in pursuing SRF loan funding to finance Project 4A and Project 4B – Alexander Avenue Water Management Site Reclaimed Augmentation Facility (Project). This project is also known as the Lake Monroe Project, Phase 4A and 4B.

A map of the project locations is shown on **Figure 1–1**.

1.2 PROJECT LOCATION AND BACKGROUND

The City of Deltona is located in northern central Florida in Volusia County. The City lies on the northern shore of Lake Monroe along the St Johns River, west of Interstate 4. The City provides a comprehensive range of municipal services including general government, public safety, community development, public works, planning, utilities, and parks and recreation.

1.2.1 Existing Reclaimed Water System

The Deltona Lakes Water Reclamation Facility (WRF) is located at 401 Fisher Dr. and provides service to the City of Deltona. The total permitted capacity of the Deltona Lakes WRF is 1.4 million gallons per day (MGD) on an annual average daily basis and is the City's largest WRF.

The facility utilizes one contact stabilization plant and one aeration/oxidation ditch with a common influent screening to treat wastewater to permit standards. The 0.9 MGD contact stabilization plant consists of flow equalization, aeration, secondary clarification, and chemical feed facilities. The 0.5 MGD extended aeration/oxidation ditch consists of aeration and clarification using an intrachannel clarifier. Effluent from both plants are combined via gravity at a common pump station and pumped to the traveling bridge filters prior to disinfection by chlorination. Residuals are thickened and treated by aerobic digestion and are removed for additional treatment and disposal.

Effluent produced by the Deltona Lakes WRF is discharged to:

- An adsorption field system; and
- Public access reuse/irrigation (includes a holding/percolation pond);

The reclaimed water service area is within the municipal boundaries of the City of Deltona and comprises approximately 517 acres of golf course, municipal, school, and residential customers. **Table 1-1** presents a summary of the existing reclaimed service area.

Table 1-1. *Reclaimed Service Area Summary*

Parameter	Value
Total Reclaimed Permitted Capacity, MGD	1.4
Deltona Hills Golf Course, MGD	0.9
Residential Irrigation, MGD	0.5
Acres Served	517

Redacted per Florida Statute 119.071 (3)b1

Page 13

CLEAN WATER STATE REVOLVING FUND FACILITIES PLAN PROJECT LOCATION MAP

2.0 PROJECT DESCRIPTION AND JUSTIFICATION

The City currently relies on groundwater withdrawal, permitted through the St. Johns River Water Management District (SJRWMD), to supply 18.3 million gallons per day (MGD) for public water supply uses. These include residential, commercial/industrial, water utility, landscape irrigation, and unaccounted-for-uses. The permitted daily withdrawal is intended to serve a projected population of approximately 142,000 people by 2033.

However, groundwater supplies in the region are limited due to minimum flow and level (MFL) requirements for Blue Spring and Blue Spring Run. As a result, the City's permitted allocations from 2019 through 2033 are dependent on timely and complete implementation of specific water supply, alternative water supply, and recharge enhancement projects. The allocations are either additive (implementation of Lower Floridan Aquifer (LFA) wells) or deductive (reclaimed/artificial recharge projects).

To avoid a withdrawal deduction in their consumptive use permit (CUP), the City is required to implement the following:

A. Expand the reclaimed system to 3.2 MGD and implement 7.9 MGD of recharge projects (as part of the WVWS) for a combined reclaimed/recharge flow of 11.1 MGD to Blue Spring by December 31, 2019;
B. Expand reclaimed water/aquifer recharge projects to 14.5 MGD (as part of the WVWS) and implement a 1.0 MGD aquifer recharge project to mitigate potential shallow aquifer impacts by December 31, 2023; and
C. Expand the reclaimed water system to 4.2 MGD by December 31, 2030.

The West Volusia Water Suppliers (WVWS) consists of the City of Deland, the City of Deltona, the City of Orange City, and the Volusia County Utility Department. The members are collaborating to build alternative water supplies to meet future water demands in western Volusia County. As part of a cooperative effort with the SJRWMD, ten projects were identified by the WVWS group to address the MFLs. The projects identified are intended to provide alternative water supplies to meet CUP and MFL requirements through either the expansion of reclaimed water or alternative water supplies.

Implementing this Project will begin the process of reducing demands on the groundwater in the Blue Springs Minimum Flow Regime and position the City as environmental conservation stewards and regional partners in solving regional water supply shortfalls and reducing environmental impacts to natural resources.

3.0 ALTERNATIVES ANALYSIS

The alternatives analysis focuses on the most cost-effective means of meeting projected water demands given the groundwater limitations imposed by the Blue Springs MFL.

The alternatives to be considered consist of:

- No action
- Develop a 2.0 MGD Alternative Potable Water Supply – This project represents a direct off set of groundwater withdrawals for potable water supply by utilizing groundwater to the north and east of the City, outside of the Blue Springs Minimum Flow Regime.
- Develop a 4.0 MGD Reclaimed Augmentation Facility – This project would expand the City's reclaimed water system allowing for a partial offset of irrigation demands using potable supplies and some ground water recharge.

3.1 ALTERNATIVES

3.1.1 No Action Alternative

Under this alternative, the conditions of the City's existing CUP are not met. This alternative has no capital cost, but is disadvantageous to the City's maximum daily withdrawal (MDW). The results of this alternative include:

- A MDW reduction to 7.3 MGD for the period 2020 to 2023 if the City doesn't implement the projects under condition A (2020 MDW – 14.77 MGD, 2023 MDW – 15.75 MGD);
- A MDW reduction to 7.5 MGD for the period 2024 to 2030 if the City doesn't implement the projects under conditions A and B (2024 MDW – 16.07 MGD, 2030 MDW – 18.3 MGD); and
- A MDW reduction to 7.7 MGD for the period 2031 to 2033 if the City doesn't implement the projects under conditions A, B, and C (2030-2033 MDW – 18.3 MGD).

The "No Action" alternative results in a significant reduction in the City's MDW that will have adverse impacts to the City's current operations as the allocations drop below current pumping levels. This alternative will not allow for any future growth and does not provide the ability to provide adequate service to the City's existing customers; therefore, this is not a viable alternative.

3.1.2 Alternative Potable Water Supply

The WVWS as a group has considered numerous projects to address the limitations imposed by the Blue Springs MFLs. One set of such projects include obtaining an additional 2.0 MGD of potable water supply from the Upper Floridan Aquifer at a location to the east of the City outside of the springshed, where the SJRWMD agrees that there are no impacts to Blue Spring and Blue Spring Run.

This alternative was investigated by the WVWS in the "West Volusia Water Suppliers, Alternative Water Cost Allocation Study prepared by Raftelis Financial Consultants, Inc in July of 2016. The study investigates the capital, O&M, and financing costs of this alternative and discusses the allocation of these costs to group members. The project consists of the phased construction of a water treatment plant, referred to as Project 1A and 1B in the study, with future supplementation of raw water supply from an investor owned utility, referred to as Project 2A. Based on projections from the WVWS members, Deltona's cost share in these facilities is estimated at 34%. **Table 3-1** presents a summary of the capital costs associated with the projects.

Table 3-1. *Alternative Potable Water Supply - Summary of Capital Costs*

Description	Capital Cost (2016 $)	Deltona Share (2016 $)	Year In Service
Project 1A	$ 14,593,500	$ 4,961,790	2019
Project 1B	$ 43,330,950	$ 14,732,523	2024
Project 2A	$ 38,387,250	$ 13,051,665	2030
Total	$ 96,311,700	$ 32,745,978	--

Annual operation and maintenance costs as determined in the study are presented in **Table 3-2** below.

Table 3-2. *Alternative Potable Water Supply – Summary of O&M Costs*

Description	Deltona O&M Cost (2016 $)
Project 1A	$ 352,920
Project 1B	$ 148,920
Project 2A	$ 278,970

The projects under this alternative do not qualify for grant funding under the current SJRWMD rules for cost-share projects.

3.1.3 Alexander Ave WMS Reclaimed Augmentation Facility

This alternative considers expanding the City's reclaimed system to provide irrigation and recharge water to various areas in the City. Thus, the impact of this project will not only offset irrigation demands on the potable system but also will allow for a certain measure of aquifer recharge. The overall project, which is divided into Projects 4A and 4B, will be designed to produce 4.0 MGD of public access reuse quality water from City stormwater sources and from a proposed withdrawal of surface water from Lake Monroe. Two (2) stormwater pump stations are currently connected to the Alexander Avenue WMS and additional pump stations are being master planned to be diverted in the future. The Lake Monroe portion of the project includes: a surface water intake/pump station on Lake Monroe, a 24-inch transmission main from Lake Monroe to the Alexander Avenue WMS, covered storage for raw surface water and stormwater, treatment consisting of coagulation, flocculation, filtration, and disinfection, as well as finished water storage. The proposed project will be constructed in two segments:

- Project 4A - Project 4A will include raw water storage, treatment, and pumping facilities for 4.0 MGD Annual Average Daily Flow (AADF) of stormwater pumped to the Alexander Avenue WMS from Tivoli Wheeling and Leland Drive Stormwater pump stations. There is no surface water in Project 4A.
- Project 4B – Project 4B will include infrastructure needed to withdraw and pump surface water from Lake Monroe to the Alexander Avenue WMS for treatment in the facilities constructed as part of Project 4A.

Under this alternative, the conditions of the City's existing permit are met by contributing to the City's share of 14.5 MGD of groundwater recharge projects required of the WVWS group and by expanding the reclaimed system to 4.2 MGD including an additional 3,314 acres of golf course, municipal, school, park, commercial, church, cemetery, sod farm, nursery, mobile home, and residential customers. The anticipated 4.0 MGD AADF on-demand

supplemental supply could significantly reduce or eliminate seasonal storage needs, as identified in preliminary investigations, and will be used to offset use of potable water withdrawal for irrigation by existing customers as well as current dry-line subdivisions that will be connected to the reclaimed system under separate projects.

The capital cost and O&M costs for this alternative are shown in **Table 3-3**. Details on the capital costs for this alternative is provided in Section 4. Future grants were not assumed for Project 4B, however, it is expected they will be awarded which will further reduce the cost for this alternative.

Table 3-3. *Alexander Avenue WMS Reclaimed Augmentation Facility – Summary of Costs*

Description	Capital Cost	Annual O&M Cost
Project 4A	$ 6,700,000(1)	$ 120,814
Project 4B	$ 6,375,000(2)	$ 20,814

Notes:
1. Net of grant funding.
2. Project will qualify for up to $ 2,500,000 of grant funding by SJRWMD under current rules.

3.2 COST COMPARION

An economic comparison of the two (2) viable alternatives was performed using a net present value analysis for a period of 20 years and a discount rate of 4.65%. **Table 3-4** summarizes the net present value for the alternatives.

Table 3-4*. Alternative Cost Analysis*

Alternative	Description	Net Present Value
1	No Action	N/A
2	Alternative Potable Water Supply	$ 28,294,120
3	Alexander Ave WMS Reclaimed Augmentation Facility	$ 14,984,769

Alternative 3, the Alexander Ave WMS Reclaimed Water Augmentation Facility, is the optimum alternative evaluated. Based on this analysis, it is selected as the recommended alternative.

4.0 SELECTED ALTERNATIVE

This section provides a description of the recommended facilities and a detailed cost estimate for the selected alternative: Project 4A and Project 4B – Alexander Ave WMS Reclaimed Augmentation Facility.

4.1 EXISTING FACILITIES

Previous contracts at this site included the construction of three (3) rapid infiltration basins (RIB), two (2) stormwater ponds, one (1) 1 million gallon (MG) ground storage tank (GST) and a high service pump (HSP) station. The GST and HSP station were recently constructed and the City has plans to convert the two (2) stormwater ponds to additional RIBs in the future. The GST is filled from an existing reuse main. Flow into the tank is monitored and controlled by a pressure relief/sustaining valve and magnetic flow meter. The HSP station maintains operator-selected discharge pressure in the reuse system using stored reuse water from the GST. These facilities also include a sodium hypochlorite storage tank and feed pumps, surge anticipator valve, emergency generator, associated electrical instrumentation/control facilities and the HSP building.

The design to construct two (2) additional RIBs at the Alexander Ave WMS is currently underway. This design will also designate the existing two (2) stormwater ponds as future RIBs.

4.2 ALEXANDER AVE WMS RECOMMENDED FACILITIES

Based on the alternatives and cost comparison discussed in Section 3.0, the selected alternative is the Alexander Ave WMS Reclaimed Water Augmentation Facility. The following subsections summarize the recommended improvements to the existing facility. Refer to **Appendix C** for the complete preliminary design report.

4.2.1 Summary of Recommended Facility

Initially, two (2) pump stations will feed stormwater to the raw water GST, the Tivoli Wheeling Stormwater Pump Station (PS) and the Leland PS. In future Project 4B, surface water from Lake Monroe will also be used to fill the raw water GST.

Raw water will be pumped from the raw water GST to a flocculation tank. Alum and polymer will be injected into the raw water upstream of the static mixer and downstream of the static mixer, respectively, and gently mixed within the flocculation tank to control algae, encourage floc formation, and enhance total suspended solids (TSS) removal at the filters. Sodium hypochlorite will be also be added to the raw water for algae control. From the flocculation tank, the conditioned water will flow by gravity to the two (2) filters for TSS reduction. Backwash water from the filters will be pumped to the plant drain pump station and ultimately to the Deltona Lakes WRF for treatment.

Filtered effluent will flow by gravity from the filters to the chlorine contact chamber (CCC) for disinfection. At the head of the CCCs, sodium hypochlorite from will be injected into the flow stream and will be mixed using vertical turbine type rapid mixers. Following injection and mixing, the chlorinated water will flow through the serpentine contact channels and overflow effluent weirs into a finished water transfer pump station (FWTPS) clearwell. The FWTPS will pump finished water to the reclaimed water GSTs. Substandard effluent (high TSS or low chlorine residual) will be diverted to the raw water GST for re-treatment. From the finished water GSTs, finished water will be pumped to the reuse system. An overflow pipe at the finished water GSTs will direct any overflow water to the RIBs.

4.2.2 Raw Water Ground Storage Tank

Raw water from the Tivoli Wheeling and Leland Storm Water Pump Stations will be stored in a proposed 3 MG GST. During Project 4B, surface water from Lake Monroe will also be pumped to the raw water GST. The 3 MG GST will be provided with an overflow that will drain to the new stormwater pond around the GST. Bypass piping

and isolation valves will also be provided so that a portion of flow can bypass the raw water GST and be directed to the treatment facilities, and the remaining flows can be directed to the stormwater pond in the event the raw water GST is removed from service. Provisions will be made that will allow the raw water GST to be converted to a finished water GST in the future.

4.2.3 Raw Water Transfer Pump Station

Under normal operation, the raw water will be directed to the raw water GST. When the raw water GST is full, raw water can flow by gravity from the raw water GST directly to the downstream treatment processes. However, as the water level in the raw water GST decreases, the available static head will become insufficient to flow by gravity and the raw water will need to be pumped to the downstream treatment processes.

The raw water transfer pump station (RWTPS) will consist of two (2) 2.0-MGD and one (1) 1.0-MGD pumps. The raw water transfer pumps will be constant speed and solids handling dry-pit submersible type pumps. The operator will select which pumps to turn on based on desired flow.

4.2.4 Chemical Conditioning Pretreatment

4.2.4.1 Chemical Injection

Two (2) static mixers will be provided to mix the chemicals with the raw water upstream of the flocculation tank

Algae may be present in source water delivered to the filter, therefore sodium hypochlorite will be injected at the first static mixer to reduce algal content in the source water to as low of a level as possible to limit its effect on filter performance. Alum and polymer will be added as a coagulant and flocculent during periods when there is high TSS content in the filtered effluent. Chemical injectors (diffuser assemblies) for alum will be provided in the second static mixer. Chemical injectors for polymer will be provided downstream of the second static mixer. The operator will be able to manually select which injection point to use, using manual ball valves on the injector piping.

Alum will be stored on-site in double wall high density polyethylene (HDPE) storage tanks. The storage tanks are sized to store 20 days of chemical at average daily flow demands. The HDPE storage tanks will be installed outside on a concrete slab. A metal canopy will be provided to protect the tanks from UV rays.

Alum and polymer feed pump skids and polymer storage drums will be housed inside a pre-cast concrete building. The proposed polymer feed system is an integrated equipment package that automatically meters, dilutes, and feeds a liquid polymer and water solution. The system includes a metering pump, a water flow regulator, and a mixing chamber. The polymer feed pump will be capable of pumping emulsion-type polymers of anionic, non-ionic, or cationic types with viscosities of up to 10,000 CPS.

4.2.4.2 Flocculation Tanks

A flocculation tank with slow mixing and a minimum 5 minute retention time at maximum flow is required prior to filtration. Flow from the flocculation tank to the filters will be by gravity. To stay within typical length to width and depth ratios and to provide a minimum recommended 2-stages, each proposed stage will consist of a 13 feet long by 13 feet wide tank. The resulting total volume will provide approximately 15 minutes of detention time at 4.0 MGD. Although this is greater than the minimum 5 minutes required, it is more aligned with typical flocculation detention times of 15 to 20 minutes for direct filtration systems. Slow gentle mixing will be provided to aid the flocculation in the tank.

4.2.5 Filtration

Solids will be removed using cloth media filters. Filter cloths are made of microfiber pile with a nominal filtration rating of 5 microns. The normal flow path for the filters will be from the outside of the cloth frame to the inside and will then flow through the center tube out into the effluent chamber, over the effluent weir and into the effluent pipe.

The filtered solids will be collected on the outside of the cloth media surface to allow for the direct contact of cleaning systems. Upon reaching a specific basin water level set point due to increased headloss, the PLC automatically initiates the backwash mode to clean the pile cloth media. Backwash and solid waste will be pumped to the onsite plant drain pump station. Filter tanks will be open at the top and an aluminum canopy will be provided over the filters.

4.2.6 High-Level Disinfection

4.2.6.1 Chemical Injection

A second sodium hypochlorite storage tank similar to the existing tank will be installed to provide enough volume for 15 days of storage. Two (2) new feed pumps with a higher maximum flowrate will be provided to send sodium hypochlorite to the CCC. The new feed pumps will be peristaltic hose pumps like the existing pumps and will be located in the existing pump station building near the existing pumps and sodium hypochlorite storage tank. The new pumps are sized so that one (1) pump can meet the maximum feed requirement to the CCC.

4.2.6.2 Chlorine Contact Chambers

Sufficient contact volume will be provided to meet a minimum contact time of 15 minutes at the design flow of 4.0 MGD. To meet the minimum “CT” requirements, the sodium hypochlorite feed facilities will be designed to maintain a minimum 1.67 mg/L chlorine residual. Sodium hypochlorite will be added to the static mixer at the head of the CCC.

4.2.7 Finished Water Transfer Pump Station

Three (3) vertical turbine finished water transfer pumps will be provided. Two (2) pumps will be rated at 2.0 MGD and the third pump will be rated at 1.0 MGD.

Water will overflow the CCC effluent weirs into the clearwell. The finished water will then be pumped by constant speed vertical turbine pumps to the GSTs. Automatic valves will be provided to open/close as needed to return substandard effluent (low chlorine residual or high TSS) to the raw water GST for retreatment.

Effluent chlorine residual will be monitored at the wetwell. A sample pump will continuously pump finished water to a chlorine residual analyzer at the existing HSP building. If the chlorine residual drops below an operator selected value (minimum 1.0 mg/L, will vary depending on contact time) or the filter effluent TSS exceeds an operator-adjustable value (maximum 5.0 mg/L), the automatic control valve on the pipe to the reclaimed water GST will close and the automatic control valve to the raw water GST will open to redirect flows to the head of the treatment facility for retreatment.

4.2.8 Reclaimed Water Ground Storage Tank

The new reclaimed water GST will be a 1.0 MG prestressed concrete tank similar to the existing GST.

Since the existing tank does not have a designated inlet for the finished water, some modifications to the existing tank and/or piping are proposed to provide an inlet for the finished water produced by this facility. A new standpipe will be installed inside the existing tank in order to avoid a large variation in head. This will require taking the tank out of service and boring under the tank to install the piping.

The new tank will be provided with a standpipe to match the changes made to the existing tank. The drain lines to the existing and new storage tanks will be interconnected to equalize water levels within the two (2) tanks. Isolation valves will be provided to allow one (1) tank to be drained and maintain the remaining tank in service.

Overflow pipe from both GSTs will be connected, metered, and routed to the RIBs distribution piping.

4.2.9 Plant Drain Pump Station

The plant drain pump station will collect drain/backwash water from the flocculation tanks, filters and chlorine contact tank and pump it to an existing 4-inch force main to the Deltona Lakes WRF for further treatment. The plant drain and filter backwash pump station will be a typical duplex type lift station with constant speed submersible type pumps. Two (2) pumps will be provided under normal operation, one (1) duty and one (1) standby, that are also capable of being operated as lead/lag pumps. The wet well will be sized to attenuate backwash flows from the filters to the WRF.

4.2.10 Other Miscellaneous Improvements

Other improvements include stormwater, electrical, and instrumentation. Refer to **Appendix C** for additional information.

4.3 COST ESTIMATE

An opinion of probable construction costs (OPCC) was developed to determine the selected alternative's estimated project cost. The cost estimates prepared included the following elements:

1. Major Equipment and Raw Material of Construction
2. Construction Labor Expenses
3. Contingency Factor

A detailed cost estimate of the selective alternative is summarized in **Table 4-1**. The Project cost is estimated at $16.8 million; however, $1.875 million and $1.875 million of funding has been granted through the SJRWMD cost share and FDEP Springs Protection, respectively for Project 4A. Future grants were not assumed for Project 4B, however, it is expected they will be awarded which will further reduce the cost for this alternative. Therefore, a total of $13.0 million is anticipated to be funded through the CWSRF program.

Table 4-1. *Opinion of Probable Construction Cost*

Description	Total Cost
Project 4A	
3 MG Raw Water Ground Storage Tank	$ 1,260,000
Raw Water Transfer Pump Station	$ 433,000
Flocculation Tank	$ 345,000
Filters	$ 905,000
Chlorine Contact Chambers & Finished Water Transfer Pump Station	$ 540,000
1 MG Ground Storage Tank and Existing 1 MG Modifications	$ 757,000
Sodium Hypochlorite System Improvements in HSP Building	$ 111,000
Chemical Building and Canopy	$ 399,000
Plant Drain Pump Station	$ 310,000
Electrical Building	$ 226,000
Electrical and I&C	$ 432,000
Civil, Site Work, and Yard Piping	$ 1,398,000
Upgrades to Existing Offsite Stormwater Pump Stations	$ 150,000
Overhead and Profit, Mob/Demob, General Requirements	$ 1,708,000
Contingency	$ 897,000
Technical Services During Construction	$ 579,000
Sub-Total	**$ 10,450,000**
Project 4B	
Raw Water Intake and Pump Station	$ 2,000,000
24” Transmission Main	$ 1,200,000
Civil, Site Work, and Yard Piping	$ 170,000
Filters and Chlorine Contact	$ 1,000,000
Transfer Pump Stations	$ 250,000
Electrical and I&C	$ 150,000
Overhead and Profit, Mob/Demob, General Requirements	$ 693,000
Contingency	$ 1,062,600
Sub-Total	**$ 6,375,600**
Project 4A and 4B Total Cost	**$16,825,600**
Less SJRWMD Cost Share Grant	-$ 1,875,000
Less FDEP Springs Protection Grant	-$ 1,875,000
Anticipated CWSRF Funding	**$ 13,075,600**

5.0 ENVIRONMENTAL EFFECTS

5.1 PROJECT BENEFITS

The proposed Alexander Ave WMS Reclaimed Augmentation Facility has several benefits:

- The City is able to meet the conditions set forth in their CUP;
- The City is able to contribute to its share of 14.5 MGD of groundwater recharge projects by the WVWS group; and
- The proposed project could significantly reduce or eliminate seasonal storage needs.

5.2 TOPOGRAPHY AND SURFACE WATERS

The proposed Project area is characterized by relatively flat terrain and much of the area is developed. **Figure 5–1** depicts the land and surface water elevations within the Project area for the selected alternative. The topographical information was obtained from the United States Geological Survey (USGS). The proposed Project is at the following approximate elevation above sea level:

- Project 4A – Alexander Ave WMS Reclaimed Augmentation Facility: 86-90 feet
- Project 4B – Alexander Ave WMS Reclaimed Augmentation Facility: 12-86 feet

Project 4A is situated at the highest elevation, where Project 4B decreases in elevation as the project area gets closer to the north shore of Lake Monroe. Proposed construction activities associated with the selected project will abide by federal, state, and City requirements. Proposed erosion sedimentation control measures will be taken to prevent any adverse impacts of nearby surface water bodies.

5.3 ENVIRONMENTALLY SENSITIVE AREAS

Short-term environmental impacts of the proposed project are not expected to be significant. In general, such impacts are expected to occur during the construction phase. Anticipated impacts in areas of construction include increased noise levels from construction machinery. To minimize noise impacts, construction documents for the project will include requirements for noise attenuation on construction equipment. Also, working hours will be limited to daylight hours to minimize disturbances to adjacent residences. Additionally, the contract documents will include requirements for dust, erosion, and sedimentation control.

Long-term environmental impacts resulting from implementation of the project are expected to be positive since the proposed facility will preserve the Blue Spring and Blue Springs Run MFLs and expand the City's reclaimed system while reliably meeting effluent limitations set forth by the FDEP.

Environmentally sensitive areas within and/or adjacent to the Project area are presented in **Figure 5–2**. Scrub Jay habitats have been identified in a portion of the Project 4A area and the intake of Project 4B is near a Manatee Critical Habitat. A site assessment and environmental survey will be completed within these areas to identify the limits of these environmentally sensitive habitats, including wetlands, and evaluate potential impacts. Although the Project area is within the vicinity of these habitats, the habitats are not anticipated to be significantly impacted. All federal, state, and City guidelines will be followed and all precautionary measures will be taken to ensure that the Project minimizes any potential effects on these environmentally sensitive areas. In addition, a Uniform Mitigation Assessment Method analysis will be completed to quantify the functional value of any identified wetland areas for future permitting efforts in Project 4B. It is expected the intake structure on Lake Monroe will require an FDEP Environmental Resource Permit as well as an US Army Corps of Engineers Dredge and Fill permit. All facilities will be designed to minimize environmental impacts.

Overall, it is anticipated that the proposed project will not adversely impact wetland areas, agricultural lands, significant historical, archeological resources or human health.

Redacted per Florida Statute 119.071 (3)b1

Page 25

PROJECT 4A ALEXANDER AVE WMS

SITE BOUNDARY 2FT LIDAR DERIVED CONTOURS (NAVD 88)

Redacted per Florida Statute 119.071 (3)b1

Page 26

PROJECT 4A AND 4B ALEXFANDER AVE WMS

ENVIRONMENTALLY SENSITIVE AREAS

5.3.1 Existing Land Use/Land Cover

Project 4A land cover is primarily identified as sand pine. Project 4B is within multiple land use/land cover classifications, however is primarily within a residential medium density classification. **Figure 5–3** shows the existing land uses/land cover for the Project area obtained from the SJRMWD's Land Use Land Cover. The proposed Project includes construction at an existing treatment facility on City owned land and along public right-of-ways. Therefore, it is expected that there will be no significant adverse effects upon flora, fauna, endangered animal species, surface water bodies, prime agricultural lands, wetlands, or undisturbed areas. All federal, state, and City guidelines will be followed and all precautionary measures will be taken to ensure that the Project minimizes potential effects on environmentally sensitive areas.

5.3.2 Endangered/Threatened Species

The United States Fish and Wildlife Service's (USFWS) records indicate endangered or threatened species that live or are believed to live in Volusia County. The species are arranged by the following groups: birds, ferns, flowering plants, insects, mammals, reptiles, and snails. **Table 5-1** presents a list of 12 federally listed species in Volusia County.

Vehicular and pedestrian surveys will be completed in all cover types throughout the Project area to search for the presence of endangered or threatened species. Although it is not anticipated that the proposed project will adversely impact endangered or threatened species, FDEP measures will be followed to minimize or avoid any impacts to plants and animals.

***Table 5-1**. Endangered and Threatened Species in Volusia County*

Group	Common Name	Scientific Name	Status
Birds	Wood Stork	Mycteria americana	Threatened
Birds	Florida Scrub-Jay	Aphelocoma coerulescens	Threatened
Flowering Plants	Okeechobee Gourd	Cucurbita okeechobeensis ssp. Okeechobeensis	Endangered
Flower Plants	Rugel's Pawpaw	Deeringothamnus rugleii	Endangered
Mammals	West Indian Manatee	Trichechus manatus	Endangered
Mammals	Southeastern Beach Mouse	Peromyscus polionotus niveiventris	Threatened
Reptiles	Hawksbill Sea Turtle	Eretmochelys imbricate	Endangered
Reptiles	Leatherback Sea Turtle	Dermochelys coriacea	Endangered
Reptiles	Loggerhead Sea Turtle	Caretta caretta	Threatened
Reptiles	Atlantic Salt Marsh Snake	Nerodia clarkia taeniata	Threatened
Reptiles	Eastern Indigo Snake	Drymarchon corais couperi	Threatened
Reptiles	Gopher Tortoise	Gopherus polyphemus	Candidate

Source: U.S. Fish and Wildlife (http://ecos.fws.gov/ecp/)

Redacted per Florida Statute 119.071 (3)b1
Page 28

PROJECT 4A AND 4B

ALEXANDER AVE. WMS

EXISTING LAND USE

5.4 FEMA FLOOD PLAIN ZONES

The Florida Emergency Management Agency (FEMA) provides flood plain zoning maps that are available to identify areas that are prone to flooding. **Figure 5–4** show the flood plain map for the proposed Project area. The Project has generally been identified to be in Zone X, with a small portion of the Project in Zone A and Zone AE.

According to FEMA, the zones indicated in the figure is defined as the following:

- Zone A – Areas subject to inundation by the 1-percent-annual-chance flood event generally determined using approximate methodologies. Because detailed hydraulic analyses have not been performed, no Base Flood Elevations (BFEs) or flood depths are shown. Mandatory flood insurance purchase requirements and floodplain management standards apply.
- Zone AE – Areas subject to inundation by the 1-percent-annual-chance flood event determined by detailed methods. Base Flood Elevations (BFEs) are shown. Mandatory flood insurance purchase requirements and floodplain management standards apply.

Essentially, both Zones A and AE are areas located in a flood plain zone and have a 1% chance of experiencing a flood event on an annual basis. The only difference is that Zone AE areas have base flood elevations (BFEs) identified because hydraulic analyses have been performed while Zone A areas do not have these BFEs established. The BFEs for Zone AE areas are shown in the flood plain figures.

Redacted per Florida Statute 119.071 (3)b1
Page 30

PROJECT 4A AND 4B

ALEXANDER AVE. WMS

FLOOD PLAIN

6.0 IMPLEMENTATION PLAN

This section presents the plan for implementing the City's reclaimed water improvements, including a financial plan, implementation schedule, and public participation.

6.1 SCHEDULE

Table 6-1 provides a schedule for the selected alternative including design completion, permit completion, and construction start and end dates.

Table 6-1. *Schedule for Selected Alternative*

Project Schedule	
Project 4A	
Design Completion	November 2016
Permitting	December 2016
Bidding	January 2017
Construction Start	April 2017
Construction End	July 2018
Construction Period	15 months
Project 4B	
Preliminary Design	January to June 2017
Final Design and Bidding	July to December 2017
Construction Start	January 2018
Construction End	July 2019
Construction Period	18 months

6.2 FINANCIAL PLAN

This section requires financial information to be supplied by the City at a later date with regard to funding of the project.

6.3 ADOPTING RESOLUTION

An advertised public hearing will be held to inform the public about this facilities plan. Citizens will be encouraged to offer comments regarding the proposed programs. A record of this hearing will be kept for public record and review. The minutes from this meeting will be incorporated in this document as **Appendix B**. Also included in **Appendix B** will be the public notice and resolutions that were adopted in support of the SRF loan.

APPENDIX A – CAPITAL FINANCING PLAN

Will be provided at a later date.

APPENDIX B – PUBLIC PARTICIPATION HEARING MINUTES AND ADOPTED RESOLUTIONS

Will be provided at a later date.

APPENDIX C – ALEXANDER AVE WMS RECLAIMED AUGMENTATION FACILITY PRELIMINARY DESIGN REPORT

City of Deltona

Project 4A – Alexander Avenue Water Management Site Reclaimed Water Augmentation Facility

Preliminary Design Report

PRESENTED TO

City of Deltona
255 Enterprise Road
Deltona, FL 32725

PREPARED BY

Tetra Tech
201 E. Pine Street, # 1000
Orlando, FL 32801

P +1-407-839-3955
F +1-407-839-3790
www.tetratech.com

TETRA TECH

#200-08534-15002
September 9, 2016

TABLE OF CONTENTS

EXECUTIVE SUMMARY VI

1.0 GENERAL 1

1.1 Project Overview 1

1.2 Project Description 1

1.3 Project Scope 3

1.4 Survey and Geotechnical Investigations 5

2.0 RAW WATER CHARACTERIZATION AND BASIS OF DESIGN 7

2.1 Data Collection 7

2.2 Lake Monroe Water Quality 7

2.3 Stormwater Water Quality 12

2.4 Benchtop Chlorine Demand/Decay Testing 14

2.5 Basis of Design Water Quality Criteria 16

3.0 PRELIMINARY DESIGN 18

3.1 Impacts and Improvements to the Existing Two Stormwater Pump Stations 18

3.1.1 Tivoli Wheeling Stormwater Pump Station 18

3.1.2 Leland Drive Flood Control Stormwater Pump Station 18

3.1.3 Path Moving Forward 19

3.2 Site Visits of Similar Facilities 19

3.2.1 City of Sanford 19

3.2.2 City of DeLand 19

3.3 Florida Department of Environmental Protection (FDEP) Regulatory Requirements 20

3.4 Overall Site Preliminary Design 22

3.4.1 Preliminary Site Layout and Process Flow Schematic 22

3.4.2 Hydraulic Profile 23

3.4.3 Hydrogeological Evaluation 23

3.5 Raw Water Ground Storage Tank 31

3.5.1 Conceptual Reclaimed Water Demand-Supply Model 31

3.5.2 Raw Water Ground Storage Tank 32

3.6 Raw Water Transfer Pump Station (RWTPS) 33

3.7 Filtration 34

3.7.1 Basis of Design 34

3.7.2 Filter Preliminary Design 34

3.7.3 Preliminary Bench Top Evaluation of Cloth Media Filter 36
3.7.4 Filter-Aid Chemicals Pretreatment System 37
3.7.5 Suspended Solids Monitoring and Control 40
3.8 Plant Drain Pump Station 41
3.9 Disinfection and Finished Water Pumping Systems 42
3.9.1 Existing Chlorine Feed & Storage System 42
3.9.2 Improvements to Existing Feed & Storage System 43
3.9.3 Proposed Chlorine Contact Chambers (CCCs) 44
3.9.4 Chlorine Residual Monitoring and Control 46
3.9.5 Chemical System Materials 46
3.9.6 Finished Water Transfer Pump Station (FWTPS) 46
3.10 RECLAIMED Water Ground Storage Tank 47
3.11 High Service Pump Station & Treatment Plant Capacities 48
3.12 Operation and Control Strategy 48
3.13 Other Miscellaneous Improvements 50
3.13.1 Electrical Building 50
3.13.2 Water Supply and Sanitary System 50
3.13.3 Landscaping and Irrigation System Design 50
3.14 Site Civil Improvements 50
3.14.1 Site Plan 50
3.14.2 Site Grading, Paving, and Drainage Plan 51
3.14.3 Stormwater Management 51
3.15 Electrical Improvements 52
3.15.1 Electrical Distribution 52
3.15.2 Grounding and Lightning Protection 53
3.15.3 Site Lighting 53
3.16 Instrumentation & Control Improvements 53
3.16.1 Control System 53
3.16.2 Instrumentation 54
3.17 Project Schedule 54
4.0 PERMITTING 55
4.1 Florida Dept. of Environmental Protection (FDEP) Wastewater Permit 55
4.2 Environmental Resource Permit 55
4.3 Other Permits 55

4.3.1 FDEP Generic Permit for Stormwater Discharge from Construction Activities 55
4.3.2 City of Deltona Building Department Permit 56
4.4 Permit Timing 56
5.0 COST ESTIMATE 57
5.1 Opinion of Probable Construction Cost 57
5.2 Equipment, Raw Materials and Labor 58
5.3 Contingency Factor 58

LIST OF TABLES

Table ES-1 Design Raw Water Characteristics vii
Table ES-2 Design Finished Water Quality Criteria vii
Table 1-1. General Soil Profile 6
Table 2-1. Lake Monroe Grab Sampling Results 8
Table 2-2. Tivoli Wheeling Stormwater Pump Station Sampling Results 9
Table 2-3. Sampling Station LM-OW-NE Summary (October 2003 – September 2011) 11
Table 2-4. Sampling Station LMAC Summary (May 1991 – October 2014) 13
Table 2-5. Sampling Matrix for Chlorine Demand and Decay Study 14
Table 2-6. Chlorine Demand/Decay Residual Summary 15
Table 2-7. Project 4A & 4B Design Raw Water Characteristics 16
Table 2-8. Project 4A & 4B Design Effluent Water Quality Criteria 16
Table 3-1. Reclaimed Water Demand and Supply Projections 31
Table 3-2. Raw Water Transfer Pump Station Design 33
Table 3-3. Filter Design 36
Table 3-4. Water Quality Analyses on Source Water Grab Samples 37
Table 3-5. Pre-Filter Sodium Hypochlorite Metering Pump Capacity 39
Table 3-6. Alum and Polymer Storage Tanks and Metering Pumps Design 40
Table 3-7. Plant Drain Pump Station Design 41
Table 3-8. Existing Sodium Hypochlorite Storage Tank Design 42
Table 3-9. Existing Sodium Hypochlorite Metering Pumps Design 43
Table 3-10. Sodium Hypochlorite Storage Requirements 44
Table 3-11. Chlorine Contact Basins Design 44
Table 3-12. Chlorine Contact Basins Chlorine Demand 45
Table 3-13. Chlorine Contact Basins Design Chlorine Doses 45
Table 3-14. Stormwater Disinfection Metering Pump Capacity 45
Table 3-15. Blended Stormwater/Lake Water Disinfection Scenarios 45
Table 3-16. Finished Water Transfer Pump Station Design 46
Table 3-17. Existing High Service Pump Station Design 48
Table 3-18. Compound Loop Chlorine Residual Monitoring and Control 50

LIST OF FIGURES

Figure 1–1. Project Location and Site Layout Map 2
Figure 1–2. Overall Site Plan 4
Figure 2–1. Historical Lake Monroe TSS 10
Figure 2–2. Historical Lake Monroe Chlorophyll a 10
Figure 2–3. Lake Monroe Grab Sampling Water Sample 12
Figure 2–4. Tivoli Wheeling Stormwater Pump Station Grab Sampling Stormwater Sample 12
Figure 2–5. Chlorine Demand/Decay Curves for Source Waters 15
Figure 3–1. Active Model Area 25
Figure 3–2. Land Surface Elevation Over Model Area 26
Figure 3–3. Simulated Water Table Elevation (Feet) 27
Figure 3–4. Calibrated Water Table Elevation (Feet, NAVD88) Near Alexander Avenue Site 28
Figure 3–5. Predicted Water Table Elevation (Feet, NAVD88) After 12 Weeks Cycled Loading of RIBS at 3-inch/Day 29
Figure 3–6. Predicted Water Table Elevation (Feet/NAVD88) After 12 Weeks Cycled Loading of RIBS at 9-inch/Day 30

APPENDICES

Appendix A – Equipment Vendor Proposals

1. **Cloth Media Filters**
2. **Vertical Turbine Pumps**
3. **Static Mixers**
4. **Slow Mixers**
5. **Polymer Feed System**
6. **Ground Storage Tank**
7. **TSS Probe**
8. **Dry Pit Submersible Pumps**

Appendix B – Subsurface Soil Exploration and Geotechnical Engineering Evaluation Proposed Treatment Plant Improvements Alexander Avenue Site, May 2015, Ardaman & Associates, Inc.

Appendix C – Preliminary Bench Evaluation of AquaDisk® Cloth Media Filter Technology for Treating Storm Water Run-Off and Lake Monroe Water for Lake Monroe Reclaimed Water Withdrawal and Treatment Facilities, Deltona, Florida, May 2015

Appendix D – Water Quality Testing Laboratory Reports

1. **Algae Enumeration and Identification**
2. **Lake Monroe Water Analytical Testing Report (04/23/2015)**
3. **Lake Monroe Water Analytical Testing Report (04/30/2015)**
4. **Lake Monroe Water Analytical Testing Report (05/06/2015)**
5. **Tivoli Wheeling Pump Station Water Analytical Testing Report (Base Flow) (05/14/2015)**
6. **Tivoli Wheeling Pump Station Water Analytical Testing Report (During Rain Event) (05/16/2015)**
7. **Tivoli Wheeling Pump Station Water Analytical Testing Report (During Rain Event) (05/26/2015)**

Appendix E – Design Drawings

EXECUTIVE SUMMARY

Project Overview

The City of Deltona (City) is participating in ongoing efforts to pursue additional water sources and alternative water supplies (AWS). More specifically, the City is a member of the West Volusia Water Suppliers' (WVWS) group. The WVWS group developed a "transient flow" groundwater model for the region that was used to work cooperatively with St. John River Water Management District (SJRWMD) staff to achieve the Minimum Flow Regime (MFR) set forth for the Blue Springs and Blue Springs Run as part of the SJRWMD's water supply plan. This project is one of ten identified projects for the WVWS group that will be constructed to offset potable groundwater withdrawals by providing alternative water supplies and reclaimed water for irrigation.

Implementing this project will ultimately reduce demands on the groundwater for irrigation use and establish the City as environmental conservation stewards. This project will also help the regional partners in solving regional water supply shortfalls and reduce impacts to the natural resources. The City has provided an interconnect with Volusia County (County) at the County's Deltona North Water Reclamation Facility (WRF). The County has interconnections with the City of DeLand and Sanford. In summary, the WVWS communities are and will be capable of sharing reclaimed water via the interconnections.

The overall project, which is divided into Projects 4A and 4B, will be designed to produce 4.0 million gallons per day (MGD) of irrigation quality water and includes a surface water intake and pump station on Lake Monroe, a 24-inch transmission main to the Alexander Avenue Water Management Site (WMS), covered storage for raw surface water and stormwater, treatment consisting of coagulation and flocculation pretreatment, filtration and disinfection, as well as finished water storage. **Figure 1-1** shows the overall project components including the locations of the storm and surface water sources. The proposed project will be constructed in two segments:

- Project 4A - Project 4A will include raw water storage, treatment, and pumping facilities for 4.0 MGD Annual Average Daily Flow (AADF) of stormwater pumped to the Alexander Avenue WMS from Tivoli Wheeling and Leland Drive Stormwater pump stations. There is no surface water in Project 4A.
- Project 4B – Project 4B will include infrastructure needed to withdraw and pump surface water from Lake Monroe to the Alexander Avenue WMS.

Stormwater Sources

Project 4A includes facilities to treat 4.0 MGD AADF of stormwater to public access reuse standards. Two stormwater pump stations as shown on **Figure 1-1** are permitted to collect and pump stormwater to the Alexander Avenue WMS for discharge at two (2) existing dry retention ponds.

- Tivoli Wheeling Stormwater Pump Station (PS).
- Leland Drive Stormwater Flood Control PS.

The Tivoli Wheeling Stormwater PS is an existing pump station that is currently pumping stormwater to the project site. The Leland Drive PS and piping to the project site is currently under construction. Project 4A will add improvements to direct the stormwater flow to the 3.0 MG Ground Storage Tank (GST) instead of the existing dry retention ponds. The stormwater will be discharged in the new stormwater retention pond if the 3.0 MG GST is at capacity.

In the future, the City is considering other water sources that could be brought to the project site to use as reuse augmentation. The City is in discussions with Florida Department of Transportation (FDOT) and SJRWMD staff regarding bringing stormwater from the Beyond I-4 Ultimate Project interchange at Saxon Blvd to cut cost by reducing the number of FDOT stormwater ponds along the corridor while providing an increased and more reliable reuse system. Moving forward, the City will continue to consider other reuse augmentation water sources.

Basis of Design Water Quality

To consistently treat stormwater to a TSS less than 5 mg/L, coagulation and flocculation using metal salts and/or polymer(s) are recommended based on the benchtop filtrability testing (see Appendix C). Alum and polymer feed and storage systems, a static mixer, and flocculation tanks will be constructed in Project 4A for raw stormwater pre-treatment and conditioning prior to filtration.

To consistently treat Lake Monroe surface water (Project 4B) to a TSS less than 5 mg/L, filter pre-treatment including coagulation and flocculation are recommended if raw water TSS is limited to 35 mg/L (maximum per day) even with the presence of finer particles (algae and other very fine particulate matter).

A summary of the raw water characteristics used for the basis of design is provided in **Table ES-1**. The finished water will augment the City's reclaimed water system; therefore, the desired effluent quality is based on meeting regulatory requirements for supplemental reclaimed water per FDEP Rule 62-610.472 Supplemental Water Supplies. A summary of the design finished water quality criteria is provided in **Table ES-2**.

Table ES-1 Design Raw Water Characteristics

Parameter	Units	Value
Flow	MGD	4.0
Influent TSS (average)	mg/L	15
Influent TSS (maximum/day)	mg/L	35
Influent TSS (peak hour)	mg/L	50
Influent Fecal Coliform	CFU/100 mL	<1,000
Lake Monroe Total Phytoplankton Biovolume	μm^3/mL	6.57×10^7
Lake Monroe Percent Blue Green Algae	%	96.5%
Lake Monroe Filter Clogging Algae	%	33%

Table ES-2 Design Finished Water Quality Criteria

Parameter	Units	Value
Flow	MGD	4.0
Effluent TSS (average)	mg/L	5.0
Minimum Chlorine Residual	mg/L	1.0
Effluent Fecal Coliform	CFU/100 mL	Non-detectable

Reliability

The Alexander Avenue WMS improvements will be designed to comply with FDEP Rule 62-610.472 Supplemental (Augmentation) Water Supplies. Unlike a wastewater treatment facility which is required to meet Class I reliability in accordance with FDEP Rule 62-600 for unrestricted public access reuse, there is no regulatory Class I reliability requirement for a supplemental reclaimed water facility in Florida. For periods when the treatment facility is off-line due to equipment failure or when the raw water GST is full, any potential flows during a storm event (i.e. the stormwater flows from the Tivoli Wheeling PS and Leland Drive PS) will be redirected to the on-site stormwater system at the Alexander Avenue WMS.

Conceptual Estimation of Seasonal Storage Needs

The projected average reclaimed water supply from the City's WRFs is comparable to the projected average reuse demand, however, a reliable supplemental reclaimed water supply is needed to satisfy daily and peak demand during dryer months. These demands can total up to twice the available supply from wastewater sources. For the supplemental supply to be able to significantly reduce or eliminate seasonal storage needs, the supplemental supply needs to be on-demand. In other words, the City would be able to withdraw water from Lake Monroe during high reclaimed water demand months when available reclaimed water supply from the City's WRFs cannot meet demands.

Alternatively, if supplemental supply is not on-demand, the City would need to provide adequate storage of supplemental water ranging from 20 to 160 Million Gallons (MG) depending on whether the City's demand patterns remain as is or shifts more towards a typical Florida demand pattern as shown in Figure 3-13 of USEPA 2004 Guidelines for Water Reuse to fill the daily supply gap during the peak demand months.

In summary, 4 MGD AADF on-demand supplemental supply could significantly reduce or eliminate seasonal storage needs. Alternatively, from 20 to 160 MG of seasonal storage will be required depending on the City's future seasonal use patterns.

Project 4A Preliminary Design

The City has recently completed construction of a 1.0 MG prestressed concrete GST and high service pump (HSP) station for reclaimed water distribution at the Alexander Avenue WMS. Project 4A includes the Alexander Avenue WMS 3.0 MG raw water GST, a raw water transfer pump station (RWTPS), coagulation and flocculation pre-treatment followed by filtration and disinfection, on-site plant drain PS, finished water transfer pump station (FWTPS), and addition of a second 1.0 MG finished water GST as depicted in **Figure 1-2**. The project includes the following major components:

- Covered Raw Water Storage Tank: A new prestressed concrete 3.0 MG covered ground storage tank will be provided for storage of stormwater (and surface water in the future). Space for a second 3 MG raw water GST is provided next to the first 3 MG GST.
- Raw Water Transfer Pump Station: The raw water transfer pump station will include dry-pit submersible pumps installed at grade adjacent to the new 3.0 MG GST.
- Filter-Aid Chemicals Pre-Treatment (Flocculation and Coagulation): Flocculation and coagulation filter pre-treatment systems using flocculation tanks with alum and/or polymer chemicals will be included in this project to coagulate very fine particulate matters into filterable sizes.
- Filtration: A 4.0 MGD AADF capacity cloth media disk filter system will be provided for TSS reduction prior to disinfection. The filter system will include two (2) filter units equipped with eight (8) disks each.
- Disinfection: A 4.0 MGD AADF chlorine contact chamber (CCC) with finished water transfer pumps will be provided for high-level disinfection. A new 2,500 gallon self-contained (double walled) HDPE chemical

storage tank will be installed next to the existing storage tank near the HSP station. Chemical feed pumps similar to the existing pumps will be provided to deliver sodium hypochlorite to the CCC. Existing designated feed pump will be used to deliver sodium hypochlorite upstream of the filters.

- Finished Water Transfer Pump Station: Three (3) finished water pumps will be installed at the clearwell of the CCC with the following capacities: 1.0 MGD, 2.0 MGD, and 2.0 MGD each. The pumps will transfer finished water to the Reclaimed Water ground storage tanks or return unsuitable (high TSS and/or low chlorine residual) effluent back to the raw water ground storage tank for retreatment.
- Effluent Storage and Pumping: The site was master planned for a second GST. A new prestressed concrete 1 MG GST will be provided to increase the amount of onsite finished reclaimed water storage to 2.0 MG total. The second GST will fit in the allocated space and maintain the vertical profile of the existing 1.0 MG GST. High service pumping will be provided by the existing HSP facilities that has been recently constructed.
- Plant Drain Pump Station: A new wet well will receive filter backwash and drains from the process tanks with submersible pumps to pump to a new 4-inch force main that will discharge into an existing onsite 4-inch sanitary force main from the Lift Station (LS) 29. The pumped flow will ultimately discharge to the Deltona Lakes WRF.
- Electrical Building: A new pre-engineered precast concrete electrical building will be provided to house the electrical gear and control equipment for the Project 4A and 4B improvements.
- Instrumentation and Controls: Additional instrumentation system components will be provided to facilitate remote monitoring and controlling of major equipment from the existing control room at the Deltona Lakes WRF and local control at the Alexander Avenue WMS.
- Access Road: A new east-west access road on the north side of the Project 4A improvements and extension of the existing 24-foot wide stabilized fire access road will be provided through the middle of the proposed treatment facilities to provide maintenance and one-way fire and chemical delivery access to the unit operations.
- Storm Water Management: A new centrally located stormwater retention pond will be the primary location for collection of stormwater from the Tivoli Wheeling PS and Leland Drive PS for periods when the treatment facility is out of service or when the 3.0 MG raw water GST is full. Alternate future location of the stormwater pond, as project and permitting constraints are determined, will be north of the site. The existing permitted stormwater facilities (future RIBs 6 & 7) will remain stormwater ponds until the proposed new stormwater pond has been constructed and accepted by the FDEP.

1.0 GENERAL

1.1 PROJECT OVERVIEW

The proposed treatment facilities at the Alexander Avenue Water Management Site (WMS) will be designed to treat up to 4.0 million gallons per day (MGD) of stormwater, and in the future, surface water, to Florida Department of Environmental Protection (FDEP) public access reuse standards of total suspended solids (TSS) less than 5.0 milligrams per liter (mg/L), and high-level disinfection with at least a 1.0 mg/L chlorine residual.

1.2 PROJECT DESCRIPTION

The Alexander Avenue WMS Improvements will be designed and constructed in two (2) segments, referred herein as Project 4A and Project 4B. The overall improvements, including both Projects 4A and 4B, generally includes storage for surface water and stormwater, pretreatment consisting of coagulation and flocculation, filtration, disinfection, effluent storage, a surface water intake and pump station on Lake Monroe, and 24-inch transmission main to the Alexander Avenue WMS. A proposed raw water ground storage tank (GST) at the site will allow for the storage of stormwater and future blending with surface water from Lake Monroe. The blended water will be treated by means of filtration and high-level disinfection. The surface water intake and pump station will be constructed on City-owned property on the north side of Lake Monroe. A proposed 24-inch transmission main (approximately 7,500 feet) will convey surface water to the Alexander Avenue WMS.

The Alexander Avenue WMS Improvements will be designed and completed as follows:

- Project 4A (current) - Project 4A will include a 3.0 million gallon (MG) prestressed concrete storage tank for raw water storage, treatment, and pumping facilities for 4.0 MGD AADF stormwater pumped to the Alexander Avenue WMS. Surface water is not part of Project 4A.
- Project 4B (future) - Project 4B will include infrastructures to pump surface water from Lake Monroe to the Alexander Avenue WMS.

The City participates in ongoing efforts to pursue additional water sources and alternative water supplies (AWS). More specifically, the City is a member of the West Volusia Water Suppliers' (WVWS) group. The WVWS group has developed a "transient flow" groundwater model for the region that was used to work cooperatively with District staff to further develop the list of ten (10) projects to create a regional water supply plan. This project will reduce potable groundwater withdrawals for irrigation as an alternative water supply project. This project will also serve as part of the City's strategy to address future requirements that are being developed for the Blue Springs Minimum Flow and Levels. Implementing this project will ultimately reduce demands on the groundwater for irrigation use and represent the City as environmental conservation stewards. This project will also help the regional partners in solving regional water supply shortfalls and reduce impacts to natural systems.

Figure 1-1 shows the proposed project location and overall improvements involved in the project.

As stated above, Project 4A will include facilities to treat 4.0 MGD AADF of stormwater to public access reuse standards. The following two stormwater pump stations have been permitted to pump stormwater to the Alexander Avenue WMS existing dry retention ponds:

- Tivoli Wheeling Stormwater Pump Station (PS).
- Leland Drive Stormwater Flood Control Pump Station (PS).

Redacted per FL Stature 119.071 (3)b1

Page 46

PROJECT 4A - ALEXANDER AVENUE WMS

RECLAIMED WATER AUGMENTATION FACILITY SITE LOCATION AND LAYOUT MAP

Part of Project 4A will be to redirect the stormwater flow to the raw water GST (when not full) instead of the dry retention ponds. The Tivoli Wheeling Stormwater PS is an existing pump station that is currently pumping stormwater to the project site. Construction of the Leland Drive PS and piping to pump stormwater to the project site is currently underway. In the future, the City is considering other water sources to be brought to the project site to use as reuse supplement. Project 4A includes the Alexander Avenue WMS raw water GST, raw water transfer pump station (RWTPS), coagulation and flocculation pre-treatment followed by filtration, disinfection, finished water transfer pump station (FWTPS), and 1 MG reclaimed water GST. The City has recently completed construction of a 1.0 MG prestressed concrete GST and high service pump (HSP) station for reclaimed water distribution at the Alexander Avenue WMS.

Figure 1-2 presents the Proposed Overall Site Plan for the Alexander Avenue WMS.

1.3 PROJECT SCOPE

The project will include preliminary design, permitting, final design, bidding, and construction phase services for the Alexander Avenue WMS Improvements which generally includes the following major components:

- Raw Water Ground Storage Tank: A new prestressed concrete storage tank with 3.0 MG storage capacity will be constructed for storage of stormwater and future surface water. The raw water GST will have a similar vertical profile to the existing 1.0 MG reclaimed water GST so that it could be used as finished reclaimed water storage in the future. Similar to the existing GST, the raw water GST will have a parapet wall to capture rainwater.
- Raw Water Transfer Pump Station: A raw water transfer pump station will be provided to transfer raw water from the raw water GST to the downstream processes. Two (2) 2.0 MGD pumps and one (1) 1.0 MGD dry-pit submersible pumps will be provided.
- Filter Pre-Treatment (Flocculation/Coagulation): New flocculation and coagulation filter pre-treatment systems using flocculation tanks with alum and polymer chemical addition will be included to coagulate finer particles into filterable sizes
- Filtration: A new 4.0 MGD AADF disk filter system will be provided for TSS reduction prior to disinfection. Two (2) filter units, each rated at 2.0 MGD AADF, will be provided.
- Disinfection: A new 4.0 MGD AADF chlorine contact chamber (CCC) with finished water transfer pumps will be provided for high-level disinfection. The CCC will consist of two (2) channels each equally sized. New sodium hypochlorite storage and feed equipment will be provided for feeding chlorine for up to 4.0 MGD AADF at the new CCC.
- Finished Water Storage and Pumping: A new 1.0 MG prestressed concrete GST will be provided to increase the amount of onsite effluent reclaimed water storage to a total of 2.0 MG. The site was master planned for a second 1.0 MG GST and the GST will fit in the allocated space. The new GST will maintain an identical vertical profile to the existing 1.0 MG GST. Similar to the existing GST, the new tank will have a parapet wall to capture rain water.

  The two reclaimed water GSTs will be set up to be filled using a reuse system control valve or onsite reuse treatment facilities using the finished water transfer pumps located in the CCC clearwell. The design flow of the finished water transfer pump station is 4.0 MGD. Three (3) pumps, two (2) rated for 2.0 MGD and one (1) 1.0 MGD, will be installed.

Redacted per Florida Statute 119.071 (3)b1

Page 48

Project 4A- Alexander Ave. WMS

RECLAIMED WATER AUGMENTATION FACILITY

WATER MANAGEMENT SITE IMPROVEMENTS
OVERALL SITE PLAN

- Plant Drain Pump Station: A new wet well will receive filter backwash and drains from the unit process tanks with submersible pumps to pump into the existing 4-inch sanitary force main from Lift Station (LS) 29. The ultimate discharge location is the Deltona Lakes WRF.
- Electrical Building: A pre-cast concrete electrical building with air conditioning and back up forced ventilation will be provided to house the electrical gear and control equipment for Projects 4A and 4B.
- Instrumentation and Controls: Additional instrumentation system components will be provided to facilitate remote monitoring and controlling of major equipment from the existing control room at the Deltona Lakes WRF and local control at the Alexander Avenue WMS.
- Access Road: A new east-west access road on the north side of the Project 4A improvements and extension of the existing 24-foot wide stabilized fire access road will be provided through the middle of the proposed treatment facilities to provide maintenance and one-way fire and chemical delivery access to the unit operations.
- Storm Water Management: A new stormwater retention pond will be used as disposal of stormwater from the Tivoli Wheeling PS and Leland Drive PS for periods when the treatment facility is out of service and/or when the 3.0 MG raw water GST is full.

1.4 SURVEY AND GEOTECHNICAL INVESTIGATIONS

A survey of the existing site was provided by the City. The City has recently constructed a reclaimed water GST and HSP station at the Alexander Avenue WMS. The Alexander Avenue Ground Storage Tank & Pump Station project design CAD files will be used as the existing conditions for this project. However, the existing contours within the footprint of the site have been changed for borrow material to raise grade around the GST and HSP station. Additionally the City intends to construct additional rapid infiltration basins around the site prior to constructing the Phase 4A Improvements. Therefore, upon completion of construction, information provided in the referenced project's record drawings in addition to topographic survey information collected as needed, will be used to confirm actual elevations, site contours, and estimate cut/fill volumes.

Geotechnical investigations were performed by Ardaman & Associates Inc. in the areas where the structures for this project were anticipated to be located based on a conceptual site layout developed in the early stages of preliminary design. Refer to **Figure 1-2** for boring locations. The results of the geotechnical exploration with recommendations were summarized in a geotechnical report titled "Subsurface Soil Exploration and Geotechnical Engineering Evaluation Proposed Treatment Plant Improvements Alexander Avenue Site". A copy of the geotechnical report is provided in **Appendix B**.

Results of the geotechnical exploration indicate that with proper site preparation, the existing soils are suitable for supporting the proposed structures on conventional shallow foundations. A summary of the general soil profile based on the results of the borings performed is provided in **Table 1-1**.

Table 1-1. General Soil Profile

Depth Below Ground Surface (feet)	Description
0 – 13 ½	Very loose to medium dense fine sand (SP) and fine sand with silt (SP-SM).
13 ½ – 38	Medium dense to dense fine sand with varying amounts of silt/clay (SP, SP-SM, SM, SP-SC, SC).
38 – 72 ½	Soft to stiff clay (CL/CH) or medium dense to dense clayey fine sand (SC).
72 ½ – 100	Medium dense to dense fine sand (SP) and fine sand with clay (SP-SC) or clayey fine sand (SC).

The following is a brief summary (not all-inclusive) of key findings:

(1) The current ground water was encountered at depths ranging from 6.7 to 10 feet below grade. The Seasonal High Ground Water Table (SHGWT) is estimated at about 7 to 10 feet below grade and as high as 5 feet at boring SB-11. The SHGWT elevation under the proposed stormwater footprint is approximately 82 feet elevation (NAVD 88 datum).

(2) With proper site preparation the existing soils are suitable for supporting the structures on conventional shallow foundation systems, spread footing for the electrical building and mat and/or mat and ringwall foundations for other structures. Refer to “Subsurface Soil Exploration and Geotechnical Engineering Evaluation Proposed Treatment Plant Improvements Alexander Avenue Site” in **Appendix B** for recommendations for site preparation.

(3) The fine sand and fine sand with silt (Strata 1 and 2, without roots) materials are suitable for use as fill materials and, with proper moisture control, should densify using conventional compaction methods. Refer to “Subsurface Soil Exploration and Geotechnical Engineering Evaluation Proposed Treatment Plant Improvements Alexander Avenue Site” in **Appendix B** for recommendations for moisture control.

It should be noted that the boring locations selected were based on a conceptual site layout developed in the early stages of the preliminary design. Additional borings will be performed during final design where the locations of the structures have significantly moved or an entirely new structure is needed on the site from the conceptual plan and sufficient data was not obtained from the other borings.

2.0 RAW WATER CHARACTERIZATION AND BASIS OF DESIGN

2.1 DATA COLLECTION

The influent raw water quality for the Alexander Avenue Water Management Site (WMS) Improvements was developed based on a combination of historical data and sample analysis. Historical data for Lake Monroe was downloaded from the SJRWMD's Environmental Data Retrieval Tool (http://webapub.sjrwmd.com/agws10/edqt/). Additionally, three sets of supplemental grab samples from Lake Monroe and the Tivoli Wheeling Stormwater PS were analyzed. The results are shown in **Table 2-1** and **Table 2-2**. Lake Monroe water was collected at the end of a boat ramp, at a depth of about three (3) to four (4) feet of water to obtain representative samples. The three (3) grab samples were collected about one (1) week apart with a variety of conditions of the surface water relative to temperature, weather conditions, lake activity, etc.

During normal operation, the Tivoli Wheeling Stormwater PS is permitted to discharge collected stormwater to the dry retention area at the Alexander Avenue WMS. During an emergency, the outfall pipe discharges stormwater that is collected at the Tivoli Wheeling Stormwater PS to Clearwater Lake. The stormwater samples were collected at the end of the outfall pipe that suspends out over the surface of Clearwater Lake and is approximately three (3) feet above the surface. A sampling apparatus was used to collect the stormwater as it was being discharged through the pipe. The grab sample (a total of 2) collection dates and time were dictated by rainfall events and were collected about one (1) week apart. One baseline grab sample of the base flow (non-rain event) was collected for comparison purposes.

2.2 LAKE MONROE WATER QUALITY

Tables 2-3 and **2-4** summarize the relevant historical sampling data for two (2) SJRWMD sampling stations on Lake Monroe. The LM-OW-NE sample point is fairly close to the boat ramp where the future intake pump station is most likely to be constructed. The LMAC sample point is in the center of the lake. The data for the two (2) sampling stations were very similar for the overlapping time period, which indicates that the LMAC sample data can be used to establish the basis of design for the lake water. For TSS, the LMAC and LM-OW-NE average, median, and standard deviation were almost identical for the time period where the LM-OW-NE data was available.

The historical data analysis for Lake Monroe is based on samples collected approximately once a month at each site. Data from the sample point at the middle of the Lake covered a much longer time period of May 1991 through October 2014 than the sample near the boat ramp which was collected during October 2003 through September 2011. However, sampling site LM-OW-NE water quality is considered to be more representative because the future intake site will most likely be situated near this sampling site. LM-OW-NE average TSS is 13.54 mg/L with a standard deviation of 11.45 mg/L and a median of 9.00 mg/L, indicating most of the values are less than the average and with some occasions of much higher TSS. 95 percent of the TSS values for site LM-OW-NE were equal to or about 33 mg/L with a maximum TSS value of 77 mg/L. The LMAC data showed a similar pattern but with a little lower average (11.01 mg/L), median (8.00 mg/L), and standard deviation (8.95). 95 percent of the TSS values reported for the LMAC were less than 30 mg/L with a maximum TSS value of 56 mg/L. See **Figure 2-1** and **Figure 2-2** for plots of TSS data and chlorophyll data, respectively. Historical Lake Monroe phosphorus concentrations were fairly low, which should limit the algae growth. These were verified by the grab sample phosphorus concentrations. Total nitrogen levels in Lake Monroe generally are below 3.0 mg/L. Average total nitrogen is about 1.7 mg/L, and 95 percent of these values are equal or less than 2.6 mg/L. In addition to the historical data, three grab samples were collected from Lake Monroe at the Boat Ramp and analyzed. Sampling results are presented in **Table 2-3**.

Table 2-1. Lake Monroe Grab Sampling Results

Parameter	Units	Lake Monroe Boat Ramp 1	Lake Monroe Boat Ramp 2	Lake Monroe Boat Ramp 3
Date		4/15/2015	4/23/2015	4/28/2015
Time		11:00 AM	11:00 AM	1:00 PM
pH (field)	---	8.23	7.50	7.95
Temperature	ºC	28.1	26.2	26.4
Conductivity	uS	966	1013	1103
TDS (field)	mg/l	675	707	771
Sulfate	mg/l	39.0	63.0	47.0
Chloride	mg/l	230	250	270
Cadmium	mg/l	0.001	0.001	0.001
Iron	mg/l	0.230	0.180	0.190
Manganese	mg/l	0.009	0.014	0.022
Nickel	mg/l	0.002	0.002	0.002
Zinc	mg/l	0.005	0.005	0.005
Mercury	ug/l	0.072	0.072	0.072
Ammonia as N	mg/l	0.100	0.100	0.100
Nitrogen, Kjeldahl	mg/l	1.30	1.00	1.90
Phosphorous, Total	mg/l	0.100	0.100	0.140
Total Sulfide	mg/l	1.00	1.20	1.00
Color	PCU	120	150	120
pH at time of Analysis	---	8.00	7.70	7.80
pH	---	7 to 8		
Turbidity	NTU	3.30	2.00	5.90
Alkalinity	mg/l as $CaCO_3$	75.0		
TDS	mg/l	540	580	610
TSS	mg/l	4.60	4.40	16.00
TOC	mg/l	18.0	19.0	20.0
Nitrogen, Total	mg/l	1.30	1.00	1.900
Orthophosphate	mg/l	0.010	0.027	0.043
Chlorophyll a	ug/l	13.0	8.50	25.0
Fecal Coliforms	CFU/100 ml	5.00	4.00	57.00

**PCU – Platinum-Cobalt Units*
**NTU – Nephelometric Turbidity Units*
**CFU – Colony Forming Units*

Table 2-2. Tivoli Wheeling Stormwater Pump Station Sampling Results

Parameter	Units	Tivoli Wheeling Stormwater Pump Station Stormwater Baseline	Tivoli Wheeling Stormwater Pump Station Stormwater 1	Tivoli Wheeling Stormwater Pump Station Stormwater 2
Date		4/30/2015	5/6/2015	5/15/2015
Time		10:25 AM	2:15 PM	9:35 AM
Sulfate	mg/l	18.0	17.0	17.0
Chloride	mg/l	69.0	71.0	71.0
Cadmium	mg/l	0.001	0.001	0.001
Iron	mg/l	3.10	0.310	0.170
Manganese	mg/l	0.040	0.003	0.003
Nickel	mg/l	0.002	0.002	0.002
Zinc	mg/l	0.031	0.005	0.009
Mercury	ug/l	0.072	0.072	0.072
Ammonia as N	mg/l	0.100	0.100	0.100
Nitrogen, Kjeldahl	mg/l	1.20	0.610	0.550
Phosphorous, Total	mg/l	0.170	0.060	0.040
Total Sulfide	mg/l	1.00	1.00	1.00
Color	PCU	90.0	40.0	35.0
pH at time of Analysis	---	6.80	7.00	7.10
pH	---		6.5 to 7.5	
Turbidity	NTU	21.0	1.50	0.770
Alkalinity	mg/l as $CaCO_3$		40.0	
Total Dissolved Solids (TDS)	mg/l	200	180	200
Total Suspended Solids (TSS)	mg/l	34.0	1.80	1.30
Total Organic Carbon (TOC)	mg/l	12.0	7.70	10.0
Nitrogen, Total	mg/l	4.20	2.10	2.60
Orthophosphate	mg/l	0.016	0.005	0.005
Chlorophyll a	ug/l	1.60	9.10	0.840
Fecal Coliforms	CFU/100	11.0	-	1.00

**PCU – Platinum-Cobalt Units*
**NTU – Nephelometric Turbidity Units*
**CFU – Colony Forming Units*

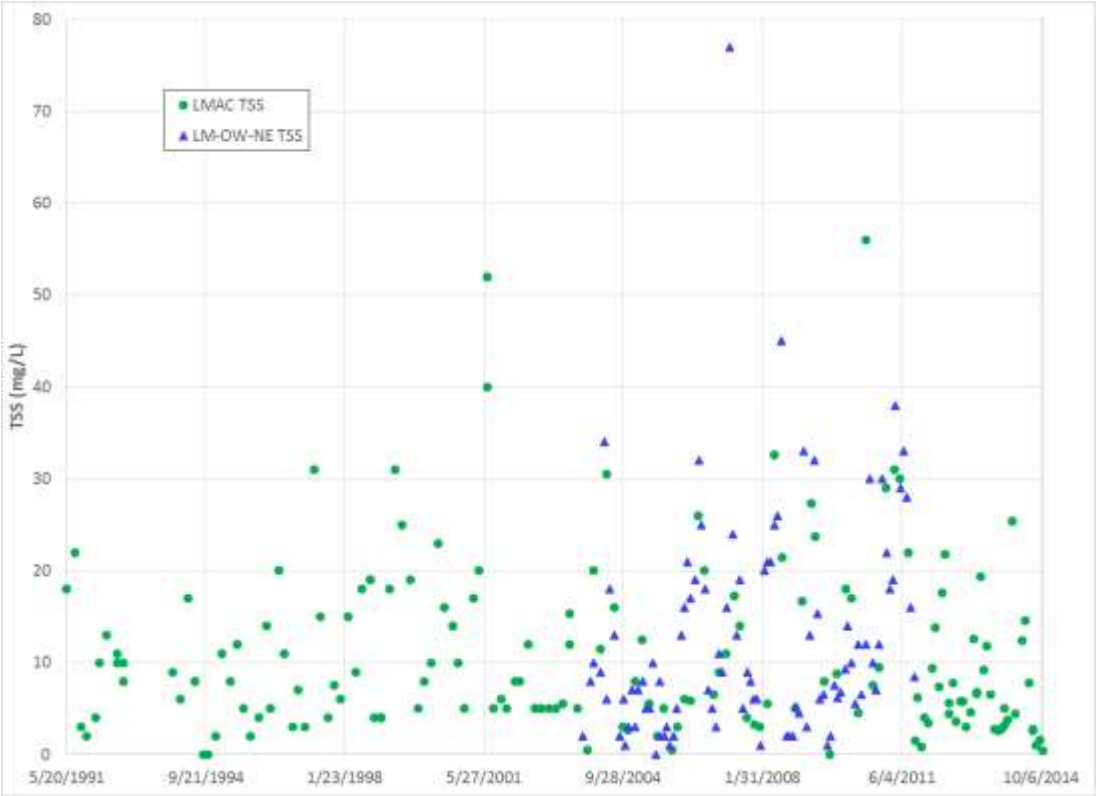

Figure 2–1. Historical Lake Monroe TSS

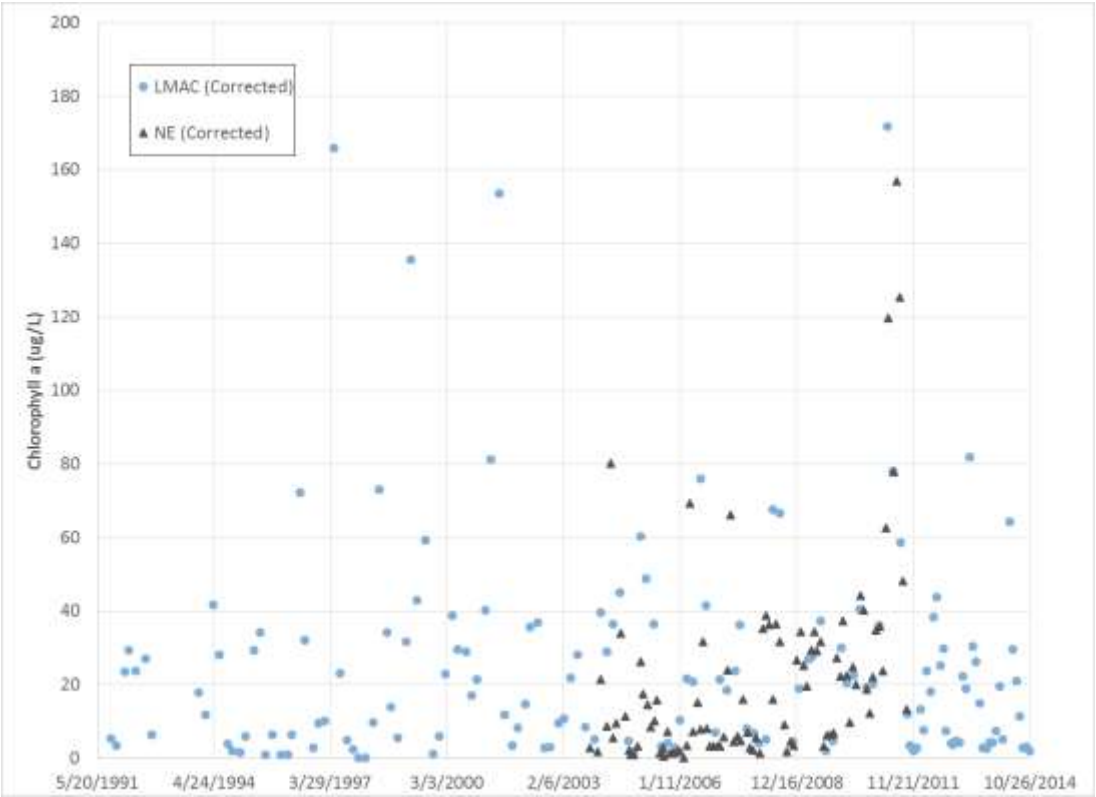

Figure 2–2. Historical Lake Monroe Chlorophyll a

Table 2-3. Sampling Station LM-OW-NE Summary (October 2003 – September 2011)

Parameter	Units	Average	Median	Standard Deviation	95th Percentile	Maximum	Number of Values
pH	---	7.74	7.66	0.800	9.26	9.54	96
Temperature	ºC	23.1	23.9	5.70	30.2	31.4	96
Conductivity	umhos/cm	1146	1129	502	1932	2066	96
Sulfate	mg/l	73.7	71.4	43.2	142	157	96
Chloride	mg/l	272	255	136	483	826	96
Cadmium[1]	ug/L	0.500	0.50	0.000	0.500	0.500	30
Iron	ug/L	382	353	150	630	710	52
Manganese	ug/L	20.5	15.5	12.4	44.3	52.8	30
Nickel[2]	ug/L	2.40	2.00	1.59	6.00	6.00	30
Zinc[3]	ug/l	6.66	5.00	2.32	10.0	10.0	30
Ammonia as N[4]	mg/l	0.040	0.022	0.052	0.097	0.353	96
Nitrogen, Kjeldahl	mg/l	1.58	1.52	0.460	2.57	3.53	96
Phosphorous,	mg/l	0.103	0.093	0.048	0.176	0.326	96
Color	PCU	156	125	104	400	400	96
Turbidity	NTU	6.34	4.93	4.96	16.8	21.7	96
Alkalinity	mg/l as $CaCO_3$	53.0	52.8	12.7	73.2	85.8	96
Total Dissolved Solids (TDS)	mg/l	654	658	288	1105	1300	96
Total Suspended Solids (TSS)[5]	mg/l	13.5	9.00	11.5	33.0	77.0	96
Total Organic Carbon (TOC)	mg/l	24.4	24.6	5.12	32.2	44.9	96
Nitrogen, Total	mg/l	1.66	1.58	0.47.	2.58	3.54	96
Orthophosphate[6]	mg/l	0.029	0.012	0.032	0.096	0.202	96
Chlorophyll a	ug/l	23.1	13.7	28.7	71.2	164	96
Chlorophyll a (corrected)	ug/l	21.5	11.8	27.2	71.4	157	96

1 All reported values were less than MDL for that sample for LM-OW-NE. Values replaced by corresponding MDL for that sample. MDL was 0.5 ug/L, except for some LMAC samples where it was 0.1 ug/L.

2 All reported values were less than MDL for that sample for LM-OW-NE. Values replaced by corresponding MDL for that sample. MDL varied, it was either 1, 2, 3, or 6 ug/L.

3 All reported values less than the MDL were replaced by MDL for statistical analysis. MDL was either 5 or 10 ug//L.

4 All reported values less than the MDL were replaced by MDL for statistical analysis. MDL was either 0.005 or 0.01 ug//L.

5 All reported values less than the MDL were replaced by MDL for statistical analysis. MDL varied 1 through 5 mg/L.

6 All reported values less than the MDL were replaced by MDL for statistical analysis. MDL was either 0.012 or 0.001 mg/L.

**PCU – Platinum-Cobalt Units*
**NTU – Nephelometric Turbidity Units*
**CFU – Colony Forming Units*

The historical data showed some occasions of high TSS and algae populations. Chlorophyll levels greater than 5 ug/l (5 milligrams per cubic meter) indicate the presence of algae. Algae might hinder filterability if it falls under "Filter Clogging" (FC) algae classification. Therefore, algae identification and enumeration analysis was performed to identify the portion of FC algae. Lake Monroe water TSS mainly consisted of single cell Blue Green Algae. Approximately 33% of total algae volume was classified as FC algae. **Appendix D** includes Lake Monroe algae identification and enumeration lab results. Source water benchtop filterability testing results and the need for the pre-treatment unit processes such as coagulation and flocculation, are discussed in Subsection 3.7 – Filtration of this report.

Figure 2-3 is a picture of Lake Monroe water taken during one of the grab sampling events. Color is not a regulatory requirement for public access reuse water but some reduction should be considered due to aesthetic and public perception reasons. Chemical addition is required for significant color reduction. Jar testing (currently underway) will evaluate effects of coagulant and flocculent addition on the color reduction.

Figure 2–3. Lake Monroe Grab Sampling Water Sample

2.3 STORMWATER WATER QUALITY

Three grab samples from the Tivoli Wheeling Stormwater PS (one base flow non-rain event sample and two rain events sample) were collected and analyzed. Base flow TSS was higher than the two rain events. The two rain event grab samples had TSS concentrations of less than 5 mg/L. Total Phosphorus in both Lake Monroe and Tivoli Wheeling Stormwater PS were around 0.1 mg/L. Total Nitrogen ranged from 1 to 4 mg/L. Chlorophyll levels in the stormwater were consistently lower than the Lake Monroe water. The results are presented in **Table 2-4**.

Figure 2-4 is a picture of the Tivoli Wheeling Stormwater PS stormwater taken during one of the grab sampling events. It is low in color and less turbid than Lake Monroe water. However, TSS levels fluctuated from less than 5 mg/L to 34 mg/L during 3 grab sampling events. Chemical additions will be required to provide coagulation and flocculation filter pre-treatment.

Figure 2–4. Tivoli Wheeling Stormwater Pump Station Grab Sampling Stormwater Sample

Table 2-4. Sampling Station LMAC Summary (May 1991 – October 2014)

Parameter	Units	Average	Median	Standard Deviation	95%	Maximum	Number of Values
pH	---	7.66	7.60	0.670	8.91	9.44	151
Temperature	ºC	23.5	23.9	5.31	30.3	31.9	151
Conductivity	umhos/cm	1070	1031	459	1828	2230	150
Sulfate	mg/l	63.1	52.0	43.8	149	210	151
Chloride	mg/l	244	238	114	435	570	150
Cadmium[1]	ug/L	0.521	0.500	0.289	0.598	3.00	146
Iron	ug/L	325	281	186	680	786	146
Manganese	ug/L	19.1	14.5	12.4	41.6	78.9	137
Nickel[2]	ug/L	2.62	2.00	2.45	6.85	13.05	146
Zinc[3]	ug/l	11.2	10.0	20.7	26.8	244	146
Ammonia as N[4]	mg/l	0.051	0.034	0.053	0.140	0.328	151
Nitrogen, Kjeldahl	mg/l	1.65	1.60	0.440	2.33	3.44	151
Phosphorous, Total	mg/l	0.095	0.086	0.053	0.168	0.578	151
Color	PCU	175	150	118	400	500	149
Turbidity	NTU	5.63	4.20	4.40	14.3	23.0	151
Alkalinity	mg/l as $CaCO_3$	55.5	55.4	14.9	80.0	89.2	149
Total Dissolved Solids (TDS)	mg/l	626	599	286	1094	1630	115
Total Suspended Solids (TSS)[5]	mg/l	11.0	8.00	8.95	29.5	56.0	151
Total Organic Carbon (TOC)	mg/l	22.8	22.5	4.45	30.3	32.6	151
Nitrogen, Total	mg/l	1.73	1.68	0.450	2.53	3.44	151
Orthophosphate[6]	mg/l	0.037	0.026	0.047	0.082	0.488	151
Chlorophyll a	ug/l	28.2	22.4	30.9	79.2	180	151
Chlorophyll a (corrected)	ug/l	24.6	18.4	29.4	74.8	171.7	149

1 All reported values were less than MDL for that sample for LM-OW-NE. Values replaced by corresponding MDL for that sample. MDL was 0.5 ug/L, except for some LMAC samples where it was 0.1 ug/L.

2 All reported values were less than MDL for that sample for LM-OW-NE. Values replaced by corresponding MDL for that sample. MDL varied, it was either 1, 2, 3, or 6 ug/L.

3 All reported values less than the MDL were replaced by MDL for statistical analysis. MDL was either 5 or 10 ug//L.

4 All reported values less than the MDL were replaced by MDL for statistical analysis. MDL was either 0.005 or 0.01 ug//L.

5 All reported values less than the MDL were replaced by MDL for statistical analysis. MDL varied 1 through 5 mg/L.

6 All reported values less than the MDL were replaced by MDL for statistical analysis. MDL was either 0.012 or 0.001 mg/L.

**PCU – Platinum-Cobalt Units*
**NTU – Nephelometric Turbidity Units*
**CFU – Colony Forming Units*

2.4 BENCHTOP CHLORINE DEMAND/DECAY TESTING

A chlorine demand/decay (CD/D) study was performed on both the Lake Monroe surface water and stormwater from the Tivoli Wheeling Stormwater PS. The primary goal of the CD/D testing was to evaluate the free chlorine demand and chlorine residual decay of the source waters to determine the necessary chlorine dosage to maintain a residual after fifteen (15) minutes. This testing attempts to simulate chlorine residual decay by dosing and mixing chlorine solution into amber glass bottles containing water samples. Several dosages were tested for each source water based on characterization of water quality from the source.

The CD/D study was performed in accordance with Standard Method Procedure 2350 B (Chlorine Demand/Requirement). Samples of raw water were poured into 500 mL amber bottles with tetrafluoroethylene (TFE) lined caps and dosed with pre-selected concentrations of chlorine. A chlorine stock solution made from commercially available sodium hypochlorite was prepared for the testing. The chlorine solution was analyzed prior to the testing to determine the actual free chlorine concentration. Each source water was dosed with a specific chlorine concentration, of which one (1) sample bottle was allowed to react with free chlorine for 15 minutes and one (1) sample bottle with free chlorine for 30 minutes, 1 hour, 4 hours, 24 hours, 4 days and 7 days. **Table 2-5** details the sampling matrix and chlorine dosages for the CD/D testing.

Table 2-5. Sampling Matrix for Chlorine Demand and Decay Study

Source Water	Sample Volume	Free Chlorine Dose (mg/L)	Contact Times
Tivoli Wheeling Stormwater Pump Station Stormwater	500 mL	15.5	15 minutes, 30 minutes, 1 hour, 4 hour, 24 hour, 4 days, 7 days
Lake Monroe Surface Water	500 mL	17.8	15 minutes, 30 minutes, 1 hour, 4 hour, 24 hour, 4 days, 7 days

The samples were stored in the dark in a water bath with an immersion heater set to maintain temperatures of approximately 24 - 26°C (75 - 79°F) for the duration of the test to simulate ambient temperatures. At the end of the specified reaction time, the free chlorine was measured.

The chlorine residuals measured after each contact time can be seen in **Table 2-6.** The results were used to construct chlorine demand curves, which are provided in **Figure 2-5**. The curves illustrate the chlorine dosage needed to maintain a target residual to simulate various hydraulic residence times. From the data, it is noted that the Lake Monroe surface water supply had an overall chlorine demand of 17.7 mg/L. Essentially all of the chlorine concentration initially dosed was consumed during the testing. The lake water only had a demand of 1.1 mg/L after 15 minutes. The Tivoli Wheeling Stormwater PS had lower overall chlorine demand, only requiring 10.5 mg/L throughout the length of the study. However, after 15 minutes, the stormwater had a higher initial demand than the surface water, requiring 1.5 mg/L.

Table 2-6. Chlorine Demand/Decay Residual Summary

Source Water	Initial Dose (mg/L)	15-min Residual (mg/L)	30-min Residual (mg/L)	1-hour Residual (mg/L)	4-hour Residual (mg/L)	24-hour Residual (mg/L)	4-day Residual (mg/L)	7-day Residual (mg/L)
Tivoli Wheeling Stormwater PS Stormwater	15.5	14.0	13.8	12.6	12.2	9.9	6.3	5.05
Chlorine Demand	---	1.5	1.7	2.9	3.3	5.6	9.2	10.45
Lake Monroe Surface Water	17.8	16.7	15.6	13.7	10.2	6.2	0.03	0.01
Chlorine Demand	---	1.1	2.2	4.1	7.6	11.6	17.77	17.79

Figure 2–5. Chlorine Demand/Decay Curves for Source Waters

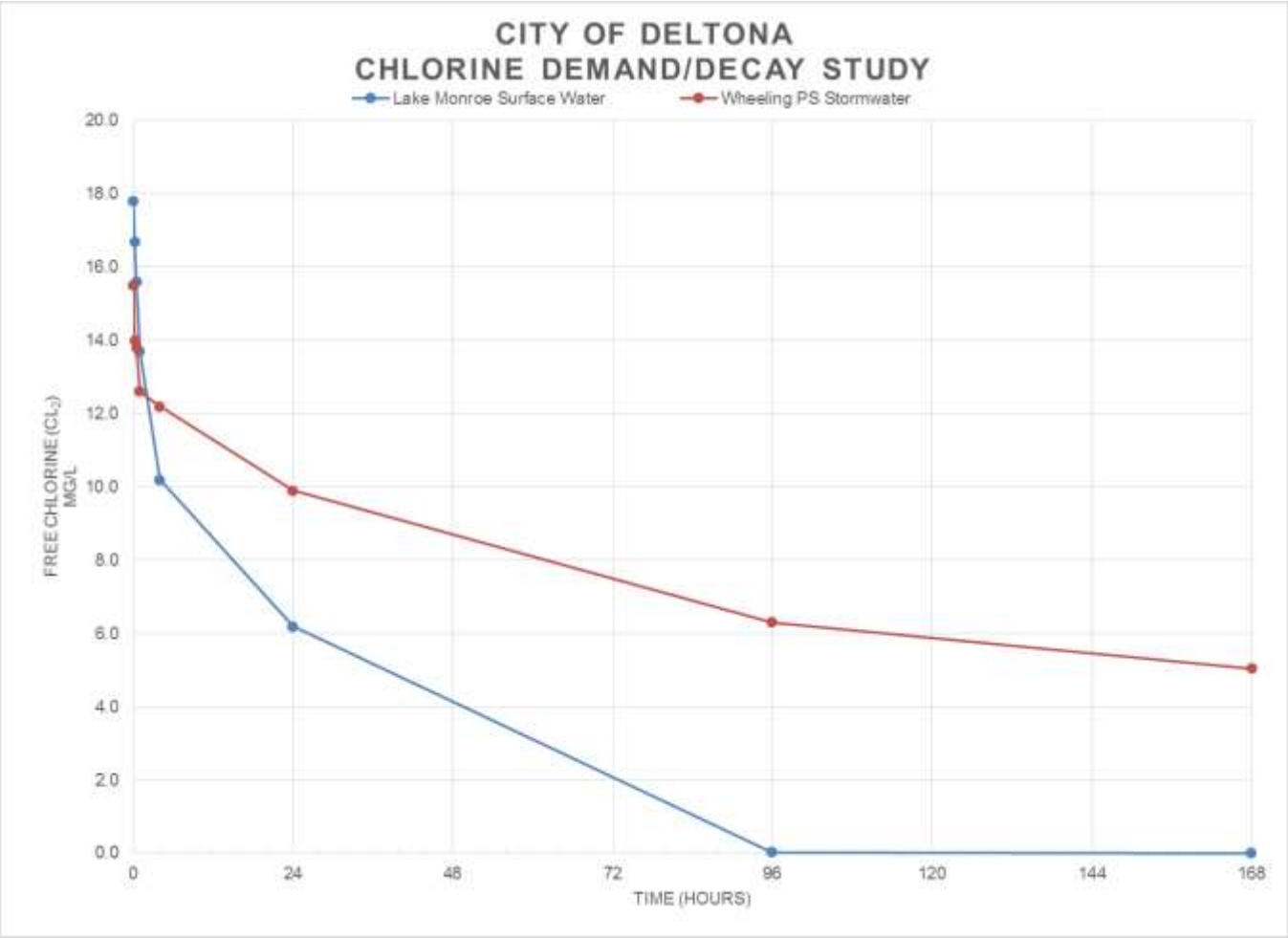

2.5 BASIS OF DESIGN WATER QUALITY CRITERIA

A summary of the raw water characteristics used for the basis of design is provided in **Table 2-7**. The finished water will be used to supplement the City's reclaimed water system. Therefore, the effluent quality is based on meeting regulatory requirements for supplemental reclaimed water per FDEP Rule 62-610.472 Supplemental Water Supplies (See Section 3.3). A summary of the finished water design water quality is provided in **Table 2-8.**

Table 2-7. Project 4A & 4B Design Raw Water Characteristics

Parameter	Units	Value
Flow	MGD	4.0
Influent TSS (average)	mg/L	15
Influent TSS (maximum day)	mg/L	35
Influent TSS (peak)	mg/L	50
Influent Fecal Coliform	CFU/100 mL	<1,000
Total Phytoplankton Biovolume	μm^3/mL	6.57×10^7
Percent Blue Green Algae	%	96.5%
Filter Clogging Algae		33%

Table 2-8. Project 4A & 4B Design Effluent Water Quality Criteria

Parameter	Units	Value
Flow	MGD	4.0
Effluent TSS (average)	mg/L	5.0
Chlorine Residual (minimum)	mg/L	1.0
Effluent Fecal Coliform	CFU/100 mL	Non-detectable

Although initially stormwater will be the water source for the facility following the Project 4A Improvements, an evaluation of the TSS data taken from the historical data and grab sample results described in Sections 2.2 and 2.3, along with the results of a bench study performed by Aqua-Aerobics (Refer to **Appendix C**), indicate that both water sources will require a higher level of treatment to achieve an average effluent TSS concentration of 5 mg/L. These values are also anticipated to be applicable to Project 4B. Stormwater requires coagulation via chemical (alum and/or polymer) addition and flocculation using flocculation tanks. Available data indicates that Lake Monroe water will also require an additional sedimentation unit process. However, during design of Project 4B, additional information may be available and the design criteria may be re-evaluated at that time.

As described in Section 2.2, data obtained from samples taken at site LM-OW-NE is anticipated to be representative of water withdrawn from the future Lake Monroe intake site. The LM-OW-NE average TSS is 13.54 mg/L. The median TSS is 9.00 mg/L. Using the average TSS concentration as the basis of design, an influent design TSS concentration of 15 mg/L was selected. Therefore, the filters will be designed for an average influent TSS of 15 mg/L and an average day maximum of 20 mg/L to achieve an average effluent TSS of 5.0 mg/L. However, 95 percent of the TSS values for site LM-OW-NE were equal to or less than 33 mg/L with a maximum TSS value of 77 mg/L. Therefore, the filter and plant drain pump station will be sized to filter and accommodate higher backwash rates associated with the occasional higher TSS loading rate of 35 mg/L.

3.0 PRELIMINARY DESIGN

3.1 IMPACTS AND IMPROVEMENTS TO THE EXISTING TWO STORMWATER PUMP STATIONS

Figure 1-1 shows locations of existing Tivoli Wheeling and Leland Drive stormwater pump stations that are permitted to pump to the Alexander Ave WMS.

3.1.1 Tivoli Wheeling Stormwater Pump Station

The Tivoli Wheeling PS has 3 vertical turbine pumps – one 600 gpm @ 96 ft. TDH jockey pump and two 2,000 gpm (each) @ 96 ft. TDH pumps. A small jockey pump turns on regularly to pump the base flow. Larger pumps typically operate (with the jockey pump) during and after the rain event to pump collected stormwater from the catchment area.

As mentioned earlier, this PS is permitted to pump stormwater to the two dry retention areas at the Alexander Ave WMS. The 16-inch stormwater main (after the construction of Project 4A improvements) will pump to the new 3 MG raw water GST or the new stormwater pond instead of the existing two dry retention areas. Motorized valves will allow discharging stormwater to the new stormwater pond when the 3 MG GST is full. The operator will be able to route the stormwater based on the reclaimed water demands and water level in the 3 MG GST. There is some minimal impact on the pumping capacity of Tivoli Wheeling PS pumps when stormwater is pumped to the new stormwater pond and the City could continue discharging stormwater after a rain event into the new stormwater pond. However, one purpose of Project 4A is to treat stormwater to public access reuse water quality standards after storage in the 3 MG GST.

The 3 MG GST side water depth due to the inlet stand pipe will be 25 feet, so there will be a reduction in the pumping rate of the existing Tivoli Wheeling PS. Therefore, upgrading the pumps should be considered (add stages or new pumps) to regain reduced pumping rate due to increase in head when pumping in the 3 MG GST. After the implementation of Project 4A, the Tivoli Wheeling PS will be able to pump into the 3 MG GST or the new stormwater pond based on the operational needs.

3.1.2 Leland Drive Flood Control Stormwater Pump Station

The Leland Drive PS will have 2 submersible pumps inside the wet well – one 1,370 gpm @ 73 ft. TDH and the other 2,700 gpm @ 88 ft. TDH pumps.

This flood control stormwater pump station is under construction. The expected pumping frequency of this pump station will be significantly lower than the Tivoli Wheeling PS. The Tivoli Wheeling PS jockey pump turns on regularly to pump base flow and the larger pumps also turn on during and after rain events. The Leland Drive PS will only turn on when water level in the source pond gets up to a permitted level, which is rare. Therefore, upgrading pumps at this PS is not critical as long as the pumps do not shut off when pumping to the 3 MG GST. The City could route the pumped flood waters to the new stormwater pond, which will be slightly closer than the permitted two dry retention areas and results in slightly lower head. The proposed operating points should be reviewed to estimate pumping rates into the new 3 MG GST at varying water levels. Due to “steep” nature of the curve, preliminary estimation is that flow will be reduced slightly more than 50% but the operating point will remain on the pump curves. In summary, improvements may not be needed to the Leland Drive Flood Control PS with Project 4A. The City will route the flow based on the operational needs to either the new stormwater pond or to the new 3 MG raw water GST.

3.1.3 Path Moving Forward

Hydraulic calculations exploring possible flow routing scenarios and associated pump operating points for both stormwater pump stations is recommended. Based on the conceptual evaluation described above, both stations can pump varying amounts of flow depending on the discharge location. These stations do not appear to be shutting off when pumping the 3 MG GST even when it is full. Therefore, the City could select where stations are pumping based on operational needs. However, there are a few key differences between the two stormwater pump stations:

- Catchment Area - Leland Drive PS has a pond it is pulling water from whereas Tivoli Wheeling PS does not.
- Frequency of Operation - Tivoli Wheeling PS turns on regularly versus Leland Drive PS is expected to operate rarely for the flood control purpose.

In addition, a purpose of Project 4A is to store stormwater in the 3 MG GST and treat to public access reuse standards. Based on the above discussion, upgrading Tivoli Wheeling PS pump is recommended to match permitted stormwater pumping capacity when the station is pumping to the 3 MG GST. Due to presence of stormwater storage at Leland Drive PS, the stormwater pond can be drained over time depending on the urgency. Therefore, reduction in pumping rate while pumping to 3 MG GST may be acceptable to the City. Conversely, the City could dispose the stormwater at the permitted rate to the new stormwater pond at the Alexander Ave WMS if needed for the flood control.

3.2 SITE VISITS OF SIMILAR FACILITIES

3.2.1 City of Sanford

The City of Deltona and Tetra Tech staff visited the City of Sanford's North Water Reclamation Facility (NWRF), which is located on the south shore of Lake Monroe in Seminole County, Florida. The City produces a highly treated wastewater effluent meeting public access reuse standards and blends it when needed with raw surface water taken from Lake Monroe. The reclaimed water is conveyed into the City's Reclaimed Water Distribution System for public access reuse. The City has an existing 36-inch surface water intake pipe from Lake Monroe, however, the City has not required additional water to augment their reclaimed water supply. The Lake Monroe water treatment system includes fine screening, an alum and polymer feed system, and two microsand ballasted clarification unit processes implementing the principles of enhanced flocculation formation and settling (Actiflo®). The Actiflo® process was originally installed for the treatment of the Lake Monroe surface water supply, however, due to lack of supplemental reuse needs it is currently utilized for polishing of the wastewater effluent. The Actiflo® system has a smaller footprint than other conventional technologies. It also has low maintenance requirements, where the microsand media at the City only requires a few bags of replenishment every six (6) to seven (7) days. The Actiflo® system does not utilize the principle of a sand bed; it combines standard coagulation chemistry with microsand flocculation and settling, where sand is injected with the coagulant to create a suspended solution of sand, particles and floc. The sand is then pulled out of solution by a cyclone based on the density of particles and recycled.

The NWRF has a surface water effluent discharge permit with strict water quality requirements including nutrients such as phosphorus. Using sweep coagulation when needed, the Actiflo® helps reduce the phosphorus level in the effluent, which has been a useful benefit of this system.

The City is satisfied with the performance of Actiflo® for treating Lake Monroe water to public access reuse standards. It is a small footprint, automatic, and low O&M process. However, it is a proprietary system provided by Kruger Inc.

3.2.2 City of DeLand

The City of Deltona and Tetra Tech staff visited the City of DeLand's Water Reclamation Facility (WRF), which is located in southwest DeLand in Volusia County, Florida. The facility has a permitted capacity of 2.0 MGD and

produces highly treated wastewater effluent meeting public access reuse standards. The facility is limited by turbidity and total dissolved solids (TDS) permit regulations and also supplements their existing reuse supply with raw surface river water from the St. John's River when necessary. In 2004, the facility was expanded and an additional 3.0 MG GST was added along with an augmentation pond (6.4 MG) for storage of excess reclaimed water and stormwater from around the City. The additional storage allows the facility to discharge excess reclaimed water (over 99-percent annually) to the ground versus discharging into the St. John's River. A river augmentation pump station supplies supplemental reclaimed water to their WRF to fill the existing pond.

The WRF uses Aqua Aerobics sand traveling bridge filters for removal of fine particulates. They also add chlorine for control of algae.

The City of DeLand has started construction for replacement of their existing traveling bridge filters with Aqua Aerobic System's cloth media disk filters by retrofitting existing filter bays. Aqua Aerobic Systems performed a benchtop testing for the City of DeLand to confirm treatment requirements. They discovered that a blend of treated wastewater and pond water was difficult to filter without chemical addition. Therefore, the project also includes chemical additions such as alum and polymer with rapid mix and flocculation tank for floc formation. In addition, they learned that chemical addition was required for significant color reduction.

3.3 FLORIDA DEPARTMENT OF ENVIRONMENTAL PROTECTION (FDEP) REGULATORY REQUIREMENTS

The proposed treatment facilities will be designed to comply with FDEP Rule 62-610.472 Supplemental Water Supplies. Incorporation of a supplemental water supply into the reuse system shall require a wastewater permit modification to the City's Deltona Lakes WRF's operating permit. The treatment facility will receive stormwater from the City's Tivoli Wheeling Stormwater PS and the Leland Drive PS in addition to future surface water from Lake Monroe as the supplemental reclaimed water supply source. Surface water or stormwater supplies may be used to supplement the reclaimed water supply, if all of the following conditions are met:

1. *Disinfection is provided and the fecal coliform and Total Suspended Solids (TSS) limits established for high-level disinfection in Rule 62-600.440(5), F.A.C., are met for the treated surface water or stormwater supply before mixing with the reclaimed water. Operating protocols and reject storage facilities are not required for the supplemental water supply.*
2. *The applicant shall provide an affirmative demonstration that the quality of the resulting mixture of reclaimed water and treated surface water or stormwater will be acceptable for the permitted uses of the reclaimed water within the reclaimed water distribution system. The following factors shall be evaluated in assessing the acceptability of the mixture of reclaimed water and supplemental water:*
    a. *The mixture shall not harm vegetation or crops grown in the reuse system.*
    b. *The mixture shall enable compliance with ground water standards at the edge of the zone of discharge.*
    c. *Public health shall be protected.*
3. *A one-way flow device shall be provided on each surface water or stormwater supply line to prevent backflow of reclaimed water into the surface water or into the stormwater treatment facilities. This does not have to be an approved device as listed in Rule 62-555.360, F.A.C. A check valve, flap valve, or other device may be used.*
4. *Continuous monitoring for disinfectant residual shall be performed on the disinfected surface water or stormwater supply at a point before mixing with the reclaimed water. Fecal coliforms and TSS shall be monitored at this point in accordance with the schedule established in Chapter 62-601, F.A.C., for high-level disinfection facilities, based on the permitted capacity of the largest domestic wastewater treatment facility providing reclaimed water to the reuse system.*

5. *The supplemental water supply pipes and appurtenances shall be color coded and marked to differentiate them from the reclaimed water and potable water facilities.*

The proposed treatment facility shall comply with the high-level disinfection requirements in Rule 62-600.440(5). The following is a summary of the high-level disinfection requirements as applicable to the project:

(a) *Facilities to provide high-level disinfection shall include additional TSS control (beyond secondary treatment levels) to maximize disinfection effectiveness and shall be designed to result in a reclaimed water or effluent in which fecal coliform values (per 100 mL of sample) are below detectable limits, except as provided in paragraph 62-600.440(5)(g) or 62-600.440(5)(h), F.A.C.*

(b) *Where chlorine is used for disinfection, the design shall include provisions for rapid and uniform mixing; and a total chlorine residual of at least 1.0 milligram per liter shall be maintained at all times. The minimum acceptable contact time shall be 15 minutes at the peak hourly flow. Higher residuals or longer contact times may be needed to meet the design and operational criteria for high-level disinfection as described in paragraphs 62-600.440(5)(c) and 62-600.440(5)(f), F.A.C. Residuals and contact times to be used for design shall be justified in the preliminary design report.*

(c) *New or expanded treatment facilities for which the Department received a complete permit application for construction of new or expanded facilities after July 1, 1991, and which are using chlorine for disinfection, shall use the following design criteria for total chlorine residuals and contact times:*

1. *For a reclaimed water or effluent containing 1,000 fecal coliforms, or less, per 100 mL before disinfection, the product of the total chlorine residual used for design (expressed in mg/L) and the contact time at peak hourly flow (expressed in minutes) shall be at least 25.*

2. *For a reclaimed water or effluent containing greater than 1,000 and up to and including 10,000 fecal coliforms per 100 mL before disinfection, the product of the total chlorine residual used for design (expressed in mg/L) and the contact time at peak hourly flow (expressed in minutes) shall be at least 40.*

3. *For a reclaimed water or effluent containing greater than 10,000 fecal coliforms per 100 mL, before disinfection, the product of the total chlorine residual used for design (expressed in mg/L) and the contact time at peak hourly flow (expressed in minutes) shall be at least 120.*

(d) *Alternate combinations of chlorine residuals and contact times used to meet the operational criteria for high-level disinfection shall be accepted by the Department for design purposes if justified in the preliminary design report.*

(e) *Facilities shall be designed to reduce TSS to 5.0 milligrams per liter or less before the application of the disinfectant. This requirement does not preclude an additional application of disinfectant prior to filtration for the purpose of improving filter performance.*

The treatment facility will be designed to provide minimum contact time of 15 minutes at maximum daily flow of 4.0 MGD.

Three grab samples from Lake Monroe and three grab samples from the Tivoli Wheeling Stormwater PS (one baseline non-rain event sample and two rain event samples) were analyzed for fecal coliform. Of these samples, the maximum fecal coliform count was 57 CFU/100 mL. Additionally, historical data for Lake Monroe was downloaded from the SJRWMD's Environmental Data Retrieval Tool (http://webapub.sjrwmd.com/agws10/edqt/) which reported fecal counts below 2 CFU/100 mL. Based on this data, a "CT" value of 25 was selected for design.

Unlike a wastewater treatment facility which is required to meet Class I reliability in accordance with FDEP Rule 62-600 in order to provide unrestricted public access reuse, there is no regulatory reliability requirement for a supplemental reclaimed water facility. Based on the City's mode of operation, the City has decided that the impact

of any downtime due to equipment failure or maintenance was acceptable. Therefore, the City has requested that Tetra Tech defer backup units, if needed, for the treatment components to a future phase.

A new stormwater retention pond will be provided at the Alexander Avenue WMS. The pond will be sized for disposal of stormwater collected at the site and for stormwater from the Tivoli Wheeling PS and Leland Drive PS for periods when the treatment facilities are out of service and/or when the 3.0 MG raw water GST is full.

3.4 OVERALL SITE PRELIMINARY DESIGN

3.4.1 Preliminary Site Layout and Process Flow Schematic

Previous contracts at this site included the construction of three (3) Rapid Infiltration Basins (RIBs), two (2) stormwater ponds, a 1 MG GST and Reuse System HSP Station. The GST and HSP station were recently constructed and the City has plans to convert the two (2) Stormwater Ponds to additional Rapid Infiltration Basins (RIBs) in the future. The GST is filled from an existing reuse main. Flow into the tank is monitored and controlled by a pressure relief/sustaining valve and magnetic flow meter. The HSPs maintain operator-selected discharge pressure in the reuse system using stored reuse water from the GST. These facilities also include a sodium hypochlorite storage tank and feed pumps, surge anticipator valve, emergency generator, associated electrical instrumentation/control facilities and the HSP building.

The design to construct two (2) additional RIBs at the Alexander Ave WMS is currently underway. This design will also designate the existing two (2) stormwater ponds as future RIBs.

Initially, two (2) pump stations will feed stormwater to the raw water GST, the Tivoli Wheeling Stormwater PS and the Leland PS. The stormwater main from the Tivoli Wheeling Stormwater PS currently enters the site from the north and the stormwater main from the Leland PS will enter (under construction) the site from the south. These two pipes are currently set up to discharge into a splitter box on the northwest portion of the Alexander Avenue WMS where the flow is split between dry retention Stormwater Ponds 1 and 2. These ponds are in the process of being designated as future RIBs. Therefore, a new stormwater pond will be constructed inside the ring of RIBs for offsite and onsite stormwater disposal. A 3 MG tank will be constructed to accept additional raw stormwater for use in the stormwater augmentation of the reuse system. Ultimately the splitter box will be removed and the stormwater piping modified under the proposed design to route the water from both pump stations into the raw water GST and any excess into the proposed stormwater pond. The flow direction of a 16-inch stormwater pipe on the West side of the Alexander Avenue WMS will be reversed, instead of carrying flow from the Leland PS north, it will bring flow from the Tivoli Wheeling Stormwater PS south to the point where the two flows combine on the south side of the raw water GST and will flow to the raw water GST. In future Project 4B, surface water from Lake Monroe will also be used to fill the raw water GST.

Upstream of the raw water GST will be flow control valves to provide the operators the ability to divert a portion of the stormwater, Lake Monroe water or a combination of the two directly to the downstream treatment processes via electrically actuated valves. In this scenario, the operators will be able to bypass the raw water GST and pump station to use energy in the pumped water from the stormwater (and in future surface water) pump stations to flow through the treatment facility. The control valves will be controlled by a magnetic flow meter based on an operator-selected flow rate and the RWTPS effluent flow monitored at the flow meter located downstream of the pump as shown on **Drawings D00102, D02101 and D02301** in **Appendix E.**

Alternatively, when water level in the raw water GST is above the designated minimum level, raw water from the GST can flow through the treatment facility by bypassing the pump station. The following is a summary of different raw water flow modes:

1. Normal operation of pumping raw water from the GST using the raw water pump station.
2. Bypass GST and raw water pump station.
3. Bypass raw water pump station when water level in GST is above a designated minimum level.

Raw water will be pumped from the raw water GST to a flocculation tank. Alum and polymer will be injected into the raw water in a static mixer and downstream of a static mixer, respectively, and gently mixed within the flocculation tank to control algae, encourage floc formation, and enhance TSS removal at the filters. Sodium hypochlorite will be added to the raw water at a static mixer for algae control. From the flocculation tank, the conditioned water will flow by gravity to the two filters for TSS reduction. Backwash water from the filters will be pumped to the Plant Drain PS and ultimately to the Deltona Lakes WRF for treatment.

Filtered effluent will flow by gravity from the filters to the CCC for disinfection. At the head of the CCCs, sodium hypochlorite from the expanded storage and feed facilities will be injected into the flow stream and will be mixed using vertical turbine type rapid mixers. Following injection and mixing, the chlorinated water will flow through the serpentine contact channels and overflow effluent weirs into a finished water transfer pump station (FWTPS) clearwell. The FWTPS will pump finished water to the reclaimed water GSTs. Substandard effluent (high TSS or low chlorine residual) will be diverted to the raw water GST for re-treatment. From the finished water GSTs finished water will be pumped to the reuse system. An overflow pipe at the finished water GSTs will direct any overflow water to the RIBs. See **Drawings D00101 and D00102** in **Appendix E** for the proposed yard piping plans. See **Drawing G00006** in **Appendix E** for the proposed process flow diagram.

3.4.2 Hydraulic Profile

The proposed treatment facility is hydraulically designed to convey flows through a combination of gravity and pressurized systems. Hydraulically the yard piping within the facility will be designed to pass up to 4.0 MGD of flow. The proposed hydraulic profile for the facility based on the maximum design flow of 4.0 MGD is presented in **Drawing G00007** in **Appendix E**.

3.4.3 Hydrogeological Evaluation

As described in other sections of this report, a stormwater treatment and storage will be managed in part using an appropriately sized stormwater pond. The stormwater pond will be located north of the treatment facility within the ring of rapid infiltration basins (RIB) as illustrated in **Figure 1-1**. Sizing of the stormwater pond will be based on the calculated storage volume requirements, and also on the capacity of the site to drain the pond via infiltration and groundwater flow. Ideally, the pond will be as deep as possible to maximize available storage volume and reduce the area. Depth to groundwater, therefore, is a limiting factor in design of the stormwater pond, and depth to groundwater is heavily influenced by local and regional recharge; nearer recharge sources having potentially much greater effect on the magnitude of fluctuations of depth of the water table, and regional (i.e. rain) having longer lasting effects. Consequently, as an element of the basis of design, depth to groundwater is assumed to limit total depth of the pond. Potential influences of natural and artificial recharge on water table elevation near the pond site were evaluated.

Natural fluctuations in depth to groundwater occur annually between wet and dry seasons, and water table may rise in response to periods of high rainfall. Other influences, such as loading of nearby stormwater ponds and/or RIBs, may also influence depth to groundwater. For this evaluation, Tetra Tech simulated the shallow groundwater system near the Alexander Avenue site and in surrounding areas by constructing a groundwater flow model using the USGS modeling code MODFLOW2000 and ESI interface code Groundwater Vistas v6.78b14. We calibrated the model to conditions observed in borings at the site, and simulated loading the existing eastern RIBs (currently in a 12-month load test) at rates consistent with the City's operating permit and some future loading conditions. Western RIBs were not simulated in part because the depth to groundwater and hydrogeologic conditions appear much less limiting than conditions near the eastern ponds. Mounding resulting from loading of the three eastern RIBs (RIBS #1, #2, and #3) will produce a shallower water table at the east end of the proposed stormwater pond location, and may limit the elevation of the pond bottom to no deeper than approximately 86 feet NAVD.

3.4.3.1 Conceptual Hydrogeological Model Construction and Calibration

The model used in the hydrogeologic evaluation comprises four layers, simulating geologic units with different hydraulic properties, and extends vertically from land surface to the Upper Floridan aquifer (UFA). In areal extent the model domain extends from Lake Monroe northward to Saxon Boulevard, and approximately 8,000 feet east and west from the Alexander Avenue site (**Figure 3-1**). Several sources of information were used to populate the model domain. Land surface elevation was derived from Volusia County Public Works 2006 Lidar data (**Figure 3-2**), initial head in the UFA layer was derived from the Volusia County model prepared by the St Johns River Water Management District (District), generalized elevation of the top of the UFA was also derived from the Volusia County model, as were model cells with specified head or head controlled flux boundary conditions, initial distribution and magnitude of recharge to the surficial aquifer, and magnitude extinction depth of evapotranspiration from the water table. The UFA was simulated as fixed head boundary cells because head fluctuations in the UFA have little to no effect on water table head response at the Alexander Avenue site.

The Alexander Avenue site is located near the southwest limit of a highlands area northeast of Enterprise, at land surface elevations that exceed 86 feet. Land surface in the highlands are more than 50 feet higher than surrounding areas. We added additional structure to better simulate rocks and sediments observed in on-site geotechnical borings. Model Layer 1 represents the surficial aquifer (water table aquifer) and extends from land surface to approximately 40 feet below land surface at the Alexander Avenue site. Model Layer 2 represents lower permeability sediments including clayey sands that were observed in geotechnical borings; and model Layer 3 represents similar sediments in the highlands area, and higher permeability sediments elsewhere.

Beyond those obtained from the regional model, several data were needed to simulate shallow water table response at the pond site. We estimated hydraulic conductivity values from in situ slug/bail tests performed in several geotechnical investigations (AAI, 2015; UES, 2014) and from slug/bail test performed on five existing RIB monitoring wells by Tetra Tech. Average horizontal hydraulic conductivity varies from 6 to 11 f/d among the five wells and the overall average is approximately 7.5 feet per day (f/d). Data not collected in the field or derived from the Volusia County model, and some that were, were modified during calibration.

Calibration comprised systematic revisions of hydraulic conductivity, storage coefficient, maximum ET, recharge, and lateral distribution of aquifer properties. Calibration targets consisted of observed water table head at the geotechnical borings. Secondary, or “soft targets” included normal seasonal high water from the NRCS soil survey and head at selected lakes and ponds. We achieved and acceptable calibration where water table head at the Alexander Avenue site was within one to two feet of observed head and where head in the water table at other locations was in general agreement with the distribution of lakes, ponds, and wetlands (**Figure 3-3**).

3.4.3.2 Hydrogeological Evaluation of the Stormwater Pond Limiting Conditions

We simulated transient rapid infiltration basin loading using increase recharge, and limited the maximum mound in each RIB using MODFLOW drain cells. Initial head in the water table was approximately 76 to 81 feet NAVD at the site (**Figure 3-4**). Each RIB cell was loaded for a 7-day period at 3 inches per day (in/d) followed by a rest period of 14-days, resulting in a 21-day load and rest cycle the cycles were repeated to simulate RIB operation through a 4-month wet season starting from an initial water table head condition similar to normal seasonal high water table. We simulated a higher load of 9 in/d using the same RIB loading cycles to confirm minimum pond bottom elevations.

At a loading rate of 3 in/d the greatest mound occurs adjacent to RIB#1; the maximum elevation at the end of the simulation was approximately 86 feet at the eastern end of the pond (**Figure 3-5**). For the 9 in/d simulation, the maximum elevation under the pond was approximately 87 feet NAVD at the eastern edge (**Figure 3-6**). The RIB loading rate has not been confirmed by the FDEP and load testing is not complete; nevertheless, observation suggests RIB loading is likely to be significantly less than 9 in/d. The simulations at 3 in/d will be more representative of conditions at the stormwater pond under likely operational loading, consequently, pending final permitting, and based on the 3 in/d simulations, the bottom of the stormwater pond should be at or above 86 feet NAVD.

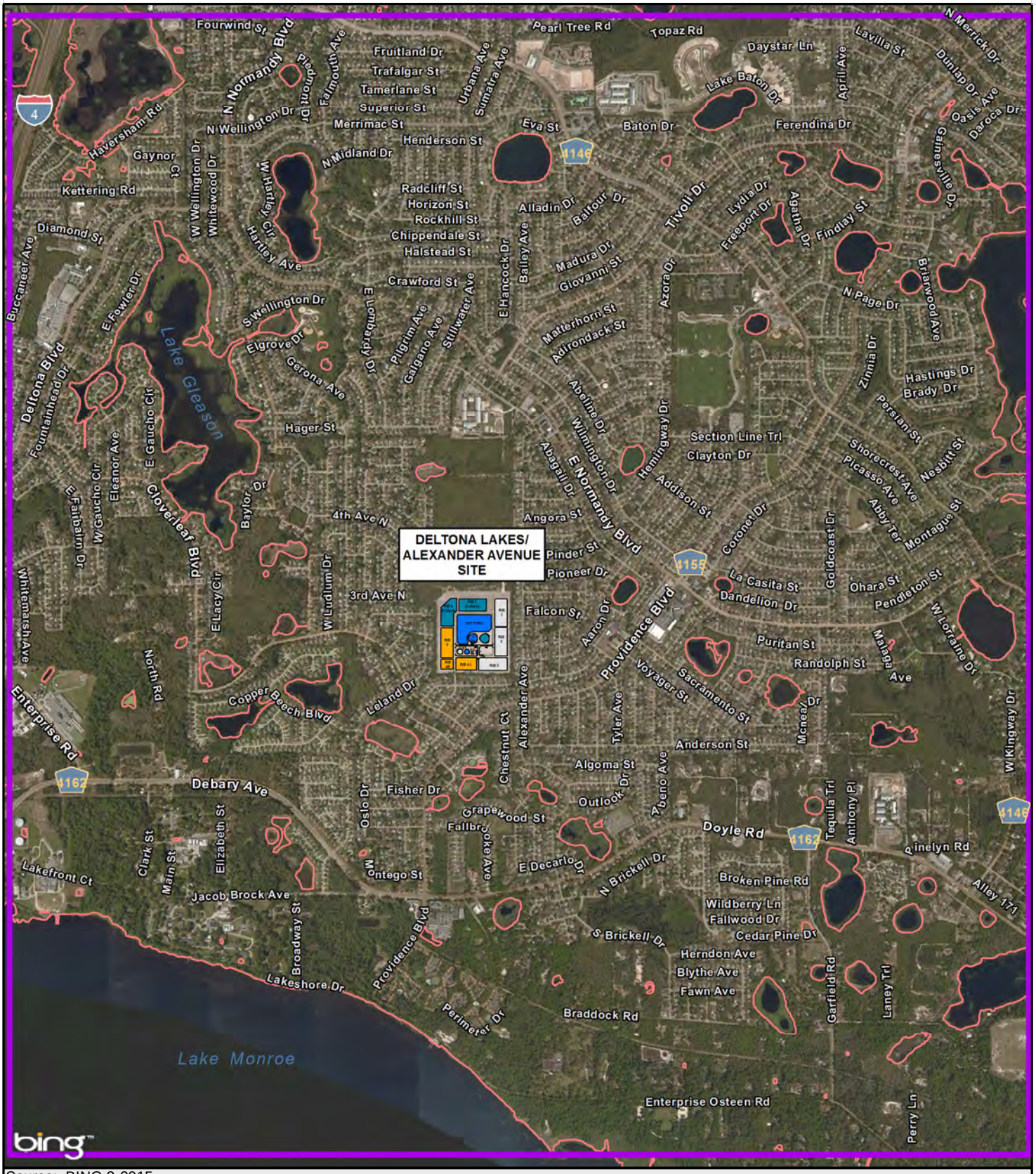

Source: BING 3-2015

LEGEND

Active Model Area

Shorelines of lakes and other standing water

TETRA TECH

0 N 2,250
Feet

CITY OF DELTONA
PROJECT 4A - ALEXANDER AVE
WATER MANAGEMENT SITE IMPROVEMENTS

ACTIVE MODEL AREA

FIGURE 3-1

P:\IER\08534\200-08534-15002\GIS\maps\PDR\APActiveArea_F3-1.mxd [betty.morris 4/28/2016]

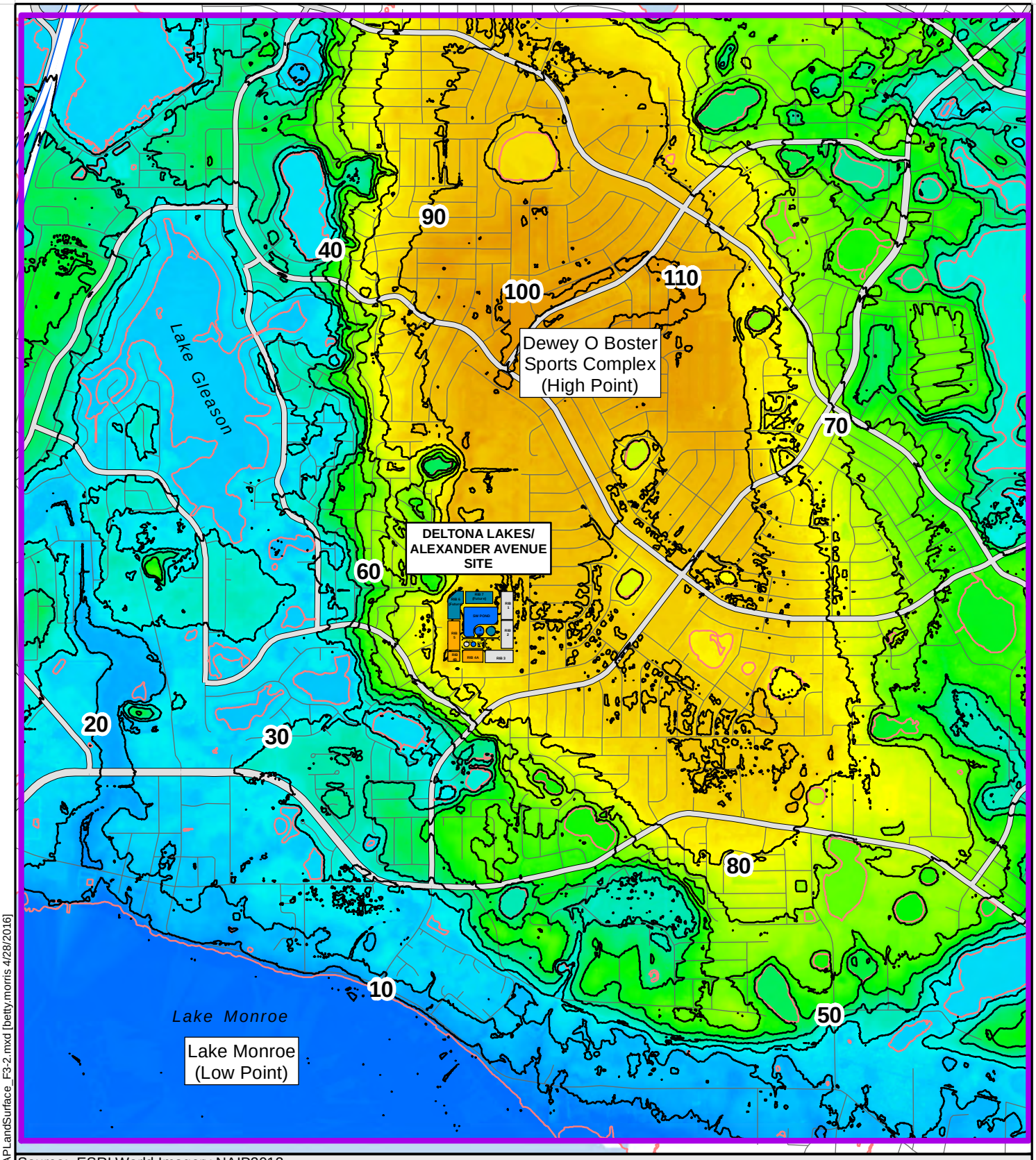

Source: ESRI World Imagery NAIP2013

LEGEND

Active Model Area

Shorelines of lakes and other standing water

High

Low

TETRA TECH

0 N 2,250

Feet

CITY OF DELTONA
PROJECT 4A - ALEXANDER AVE
WATER MANAGEMENT SITE IMPROVEMENTS

LAND SURFACE ELEVATION OVER MODEL AREA

FIGURE 3-2

P:\IER\08534\200-08534-15002\GIS\maps\PDR\APLandSurface_F3-2.mxd [betty.morris 4/28/2016]

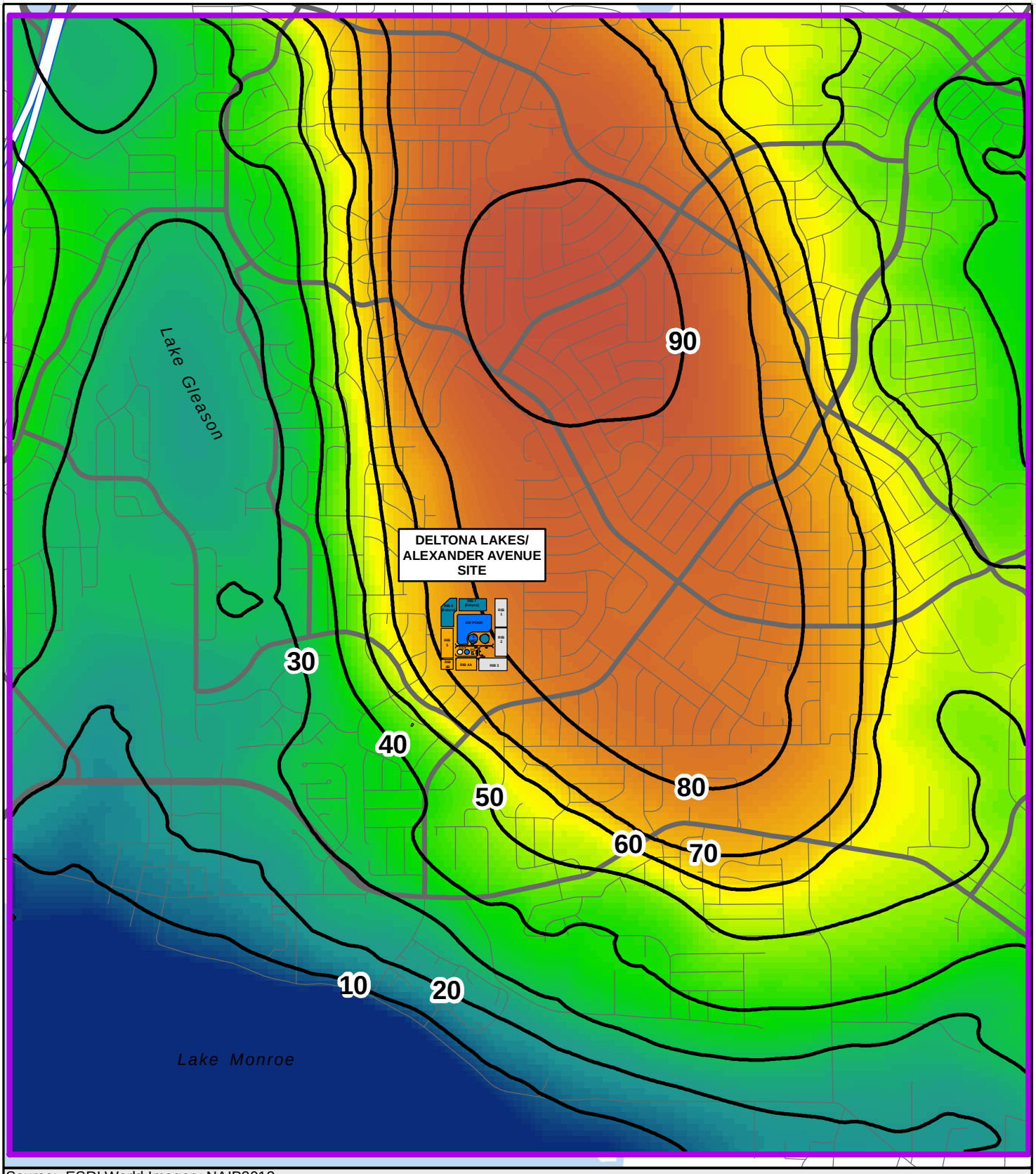

Source: ESRI World Imagery NAIP2013

LEGEND

Active Model Area

High

Low

TETRA TECH

0 N 2,250

Feet

CITY OF DELTONA
PROJECT 4A - ALEXANDER AVE
WATER MANAGEMENT SITE IMPROVEMENTS

SIMULATED WATER TABLE ELEVATION (FEET)

FIGURE 3-3

P:\IER\08534\200-08534-15002\GIS\maps\PDR\APSimWaterTable_F3-3.mxd [betty.morris 4/28/2016]

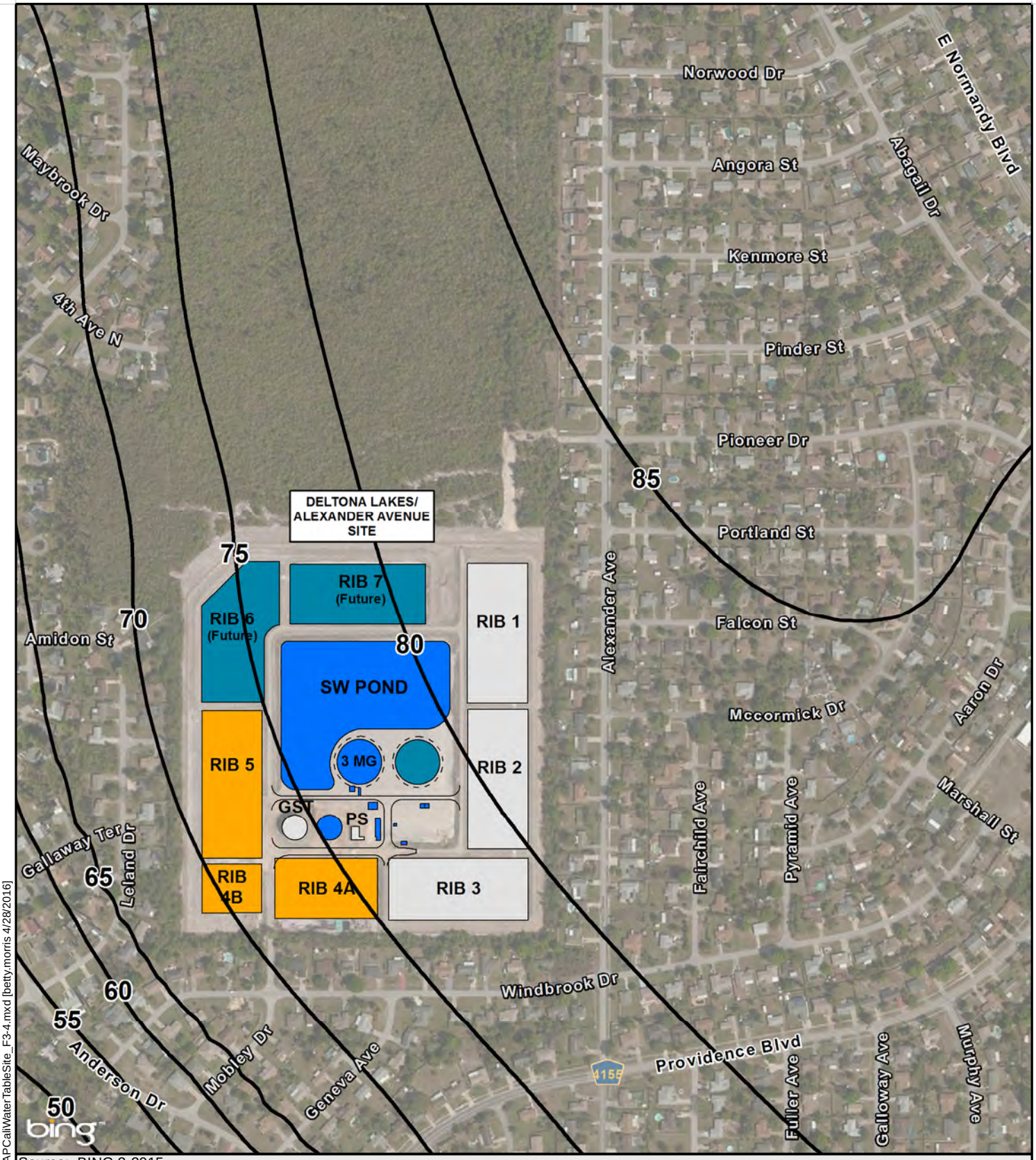

Source: BING 3-2015

LEGEND

- Project 4A Improvements
- Phase II RIBS (by Others)
- Future Projects
- Existing Structures

TETRA TECH

0 N 450
Feet

CITY OF DELTONA
PROJECT 4A - ALEXANDER AVE
WATER MANAGEMENT SITE IMPROVEMENTS

CALIBRATED WATER TABLE ELEVATION (FEET, NAVD88)
NEAR THE ALEXANDER AVENUE SITE

FIGURE 3-4

P:\IER\08534\200-08534-15002\GIS\maps\PDR\APCaliWaterTableSite_F3-4.mxd [betty.morris 4/28/2016]

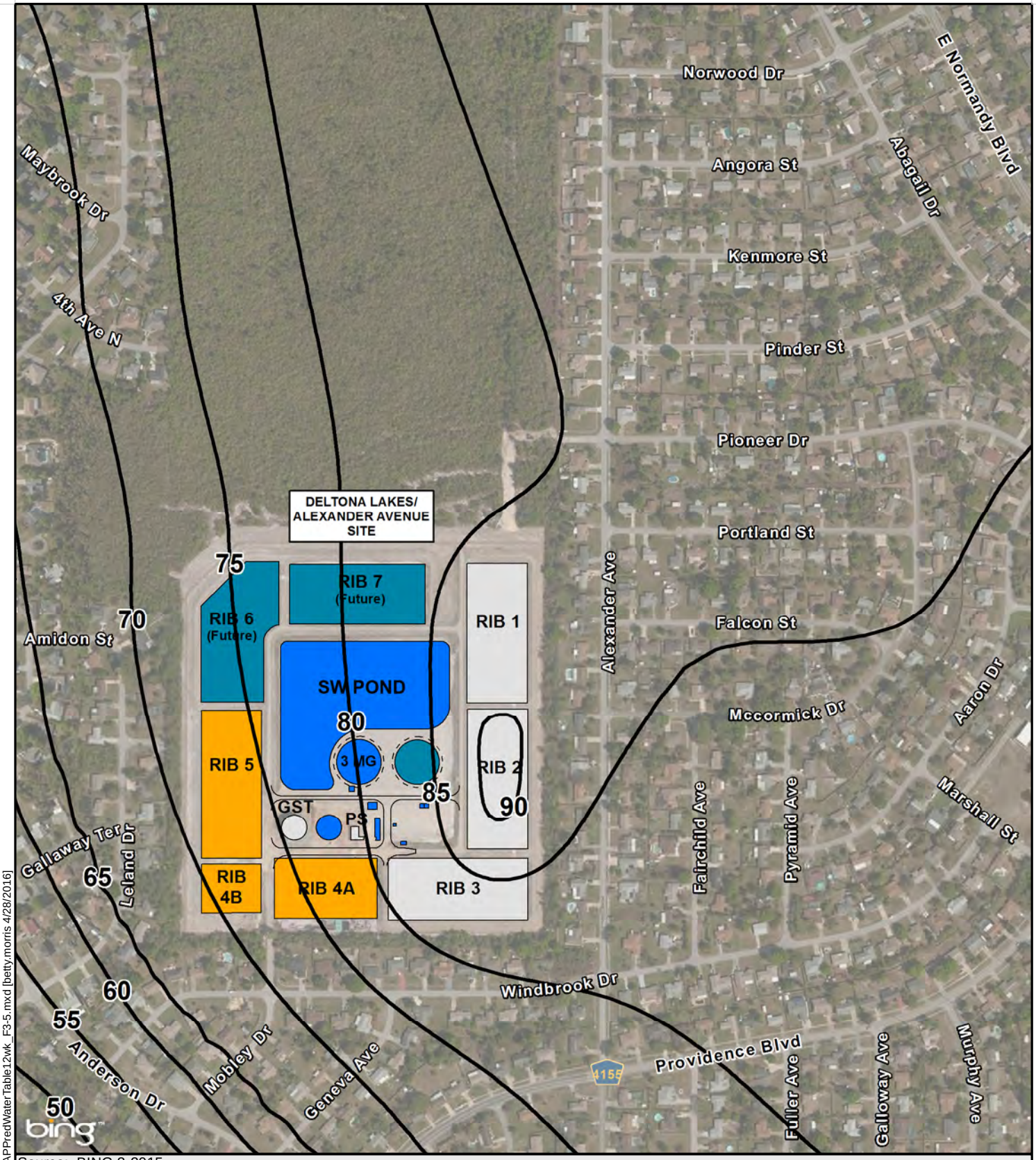

Source: BING 3-2015

LEGEND

- Project 4A Improvements
- Phase II RIBS (by Others)
- Future Projects
- Existing Structures

Loading for 7 days with 14 days rest between loading cycles.

TETRA TECH

0 N 450
Feet

CITY OF DELTONA
PROJECT 4A - ALEXANDER AVE
WATER MANAGEMENT SITE IMPROVEMENTS

PREDICTED WATER TABLE ELEVATION (FEET, NAVD88)
AFTER 12 WEEKS CYCLED LOADING OF RIBS AT 3-INCH/DAY

FIGURE 3-5

P:\IER\08534\200-08534-15002\GIS\maps\PDR\APPredWaterTable12wk_F3-5.mxd [betty.morris 4/28/2016]

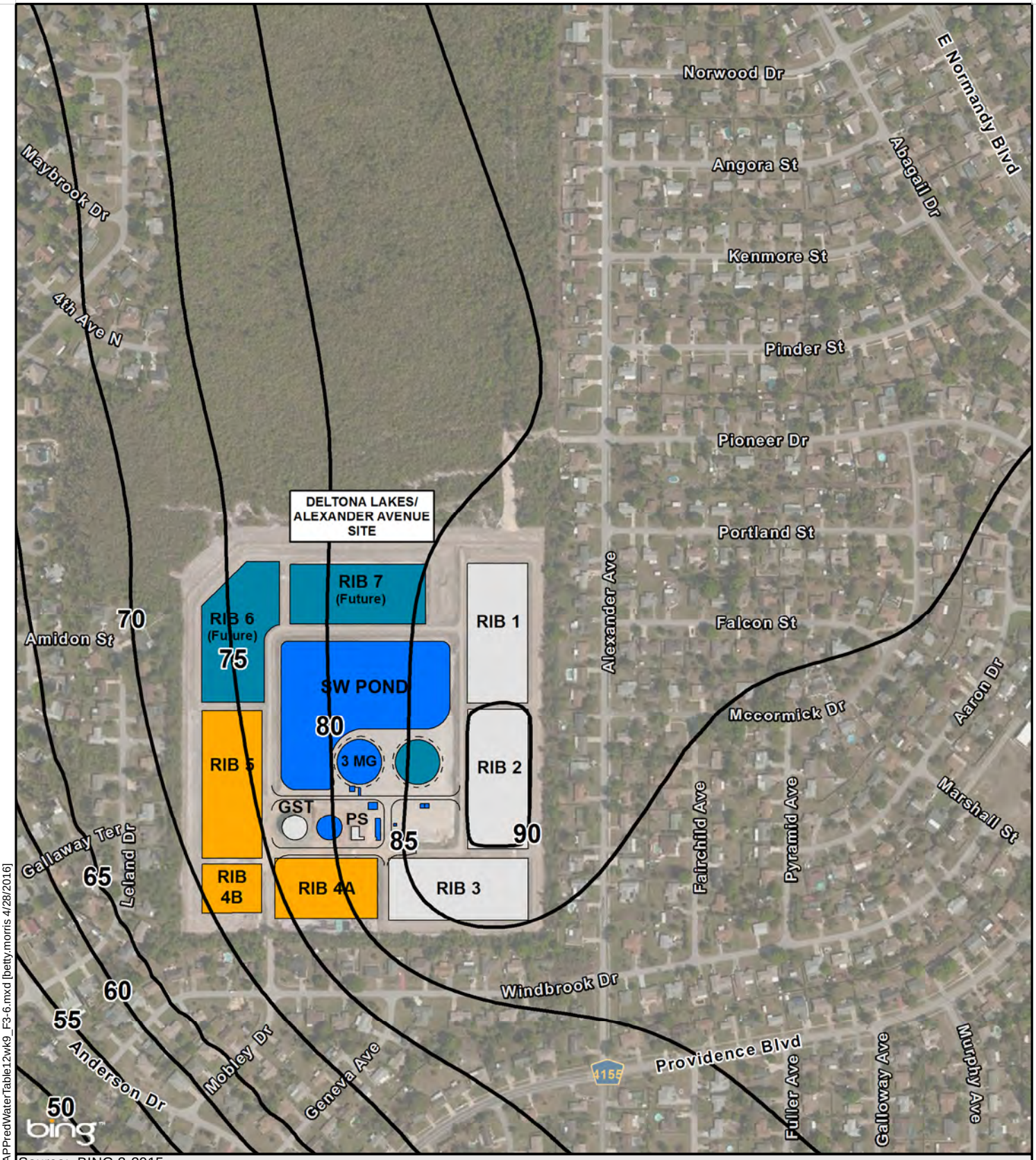

Source: BING 3-2015

LEGEND

- Project 4A Improvements
- Phase II RIBS (by Others)
- Future Projects
- Existing Structures

Loading for 7 days with 14 days rest between loading cycles.

TETRA TECH

0 N 450
Feet

CITY OF DELTONA
PROJECT 4A - ALEXANDER AVE
WATER MANAGEMENT SITE IMPROVEMENTS

PREDICTED WATER TABLE ELEVATION (FEET, NAVD88)
AFTER 12 WEEKS CYCLED LOADING OF RIBS AT 9-INCH/DAY

FIGURE 3-6

P:\IER\08534\200-08534-15002\GIS\maps\PDR\APPredWaterTable12wk9_F3-6.mxd [betty.morris 4/28/2016]

3.5 RAW WATER GROUND STORAGE TANK

3.5.1 Conceptual Reclaimed Water Demand-Supply Model

3.5.1.1 Reclaimed Water Demand & Supply Projections

The City is currently permitted to provide 1.4 MGD ADF of reclaimed water to its reuse service area. The City had a Reclaimed Water System Preliminary Design Report prepared by Baskerville-Donovan, Inc. in 2011. Under that scope of work Baskerville-Donovan, Inc. identified additional reuse service customers and estimated a potential demand of 3.459 MGD ADF.

Currently reclaimed water is supplied to the reuse system by the City's Deltona Lakes WRF. The current flow to the Deltona Lakes WRF is approximately 0.9 MGD. According to the 2008 Master Plan prepared by Tetra Tech, ultimately it is expected that the Deltona Lakes WRF will treat up to 1.3 MGD. A second WRF, the Eastern WRF is currently being constructed and expected to begin supplying reclaimed water for the reuse system before the end of 2016. The Eastern WRF will have an initial capacity of 1.0 MGD ADF with plans to expand to 3.0 MGD in the future. Initially, the Elkcam Wastewater Pump Station and then new flows from the Eastern Wastewater service area will be treated at the Eastern WRF. According to the 2009 Water Supply Work Plan for the City of Deltona prepared by Baskerville-Donovan, Inc., the Eastern WRF would begin operations in 2012. At that time, 0.4 MGD of the flow (Elkcam Wastewater Pump Station) to the Deltona Lakes WRF would be diverted to the Eastern WRF. The flow to the Eastern WRF was projected to be 0.9 MGD by 2017, increase to 1.8 MGD by 2022 and reach 2.7 MGD by 2025. Due to various economic factors, growth and development significantly slowed. Initially when the Eastern WRF is brought online, some flow from the Deltona Lake WRF will be diverted to the Eastern WRF, therefore, the total supply of reclaimed water available is not expected to change upon start-up of the Eastern WRF.

During periods when the reuse demand exceeds the supply, a combination of stormwater and Lake Monroe water is proposed to meet the reuse demands. **Table 3-1** summarizes the Reclaimed Water Demand and Supply Projections used for this report. After including up to 4.0 MGD ADF of supplemental supply, the reclaimed water demand is less than half of the available supply. Therefore, the need to provide seasonal storage of reclaimed water should be minimal. However, operational storage will be needed to supply reclaimed water to meet diurnal demand variations.

Table 3-1. Reclaimed Water Demand and Supply Projections

Year	Average Daily Flow (MGD)					
	Reclaimed Water Supply					
	Total	Eastern	Deltona Lakes	Supplemental	Reuse Demand	Reuse Surplus
2015	0.90	0.40	0.50	0.00	0.81	0.09
2020	1.49	0.69	0.80	4.00	0.81	4.68
2025	2.88	1.58	1.30	4.00	1.12	5.76
2030	3.58	2.28	1.30	4.00	3.57	4.01
2035	4.27	2.97	1.30	4.00	3.57	4.70

3.5.1.2 Conceptual Estimation of Seasonal Storage

Seasonal storage of reclaimed water should be provided to account for seasonal fluctuations of reuse water demand. Depending on the volume and pattern of projected reuse demands, seasonal storage requirements can

have substantial impact on capital cost and operational expenses of a reuse system. In order to provide 100 percent equalization of seasonal supply and demands, traditional storage volumes such as ground storage tanks and reservoirs may be very large in comparison to the design flows. To determine the expected fluctuations in the City's monthly reuse demand, historic flow data was evaluated for each month for the past 4 years. The data was used to develop demand factors that correlate to the anticipated demand based on a fraction of the average monthly demand. For the data analysis, flows to the Deltona Lakes WRF onsite irrigation and water supply system and golf courses were excluded in order to eliminate any irregularities in the reuse demand factors at these locations which may be impacted by other factors. The fluctuations observed in the City's public access reuse demands were then compared to typical values. Based on the City's historical reuse flow data from June 2011 through April 2015, the reuse demand factor (monthly reuse demand as a fraction of average monthly flow) ranged from 0.73 in January and February to 1.22 in May. Based on a projected reuse service area with a 3.5 MGD AADF, the seasonal storage requirement for 100 percent equalization is 20 MG, assuming on-demand supplemental supply is not available.

However, since the City's current reuse system's demands are low compared to the anticipated future demands, the demand factors may exhibit greater variations throughout the year in the future. Therefore, Tetra Tech also compared the seasonal storage requirements based on typical reuse demands for irrigation purposes in the State of Florida. Typical demand factors for irrigation systems in the State of Florida were interpolated from Figure 3-13 of the USEPA 2004 Guidelines for Water Reuse. Typical reuse demand factors reported varied from as low as 0.15 in February and as high as 2.0 in May. Based on typical variations in reuse demands and a projected reuse service area with a 3.5 MGD AADF, the seasonal storage requirement for 100 percent equalization is 160 MG or higher if the City's system peaks are higher than typical.

The Alexander Avenue WMS Improvements will provide up to an additional 4.0 MGD ADF of potential water supply to the reuse water system. The ability to provide on-demand supplemental supply to the reuse system will greatly reduce and potentially eliminate the City's need for any seasonal storage. For the supplemental supply to be able to eliminate seasonal storage needs, the supplemental supply needs to be on-demand. In other words, the City would be able to withdraw water from Lake Monroe during high reclaimed water demand months when available reclaimed water supply from the City's WRFs cannot meet demands. Alternatively, if supplemental supply is not on-demand, the City should consider providing adequate storage of supplemental water (20 to 160 MG depending on whether the City's demand patterns remain as is or shifts more towards a typical Florida demand pattern as shown in Figure 3-13) to have enough throughout the peak demand months. The City should continue to track monthly demand patterns and estimate future seasonal storage needs.

In summary, 4 MGD AADF on-demand supplemental supply could significantly reduce or eliminate seasonal storage needs. Alternatively, from 20 to 160 MG of seasonal storage will be required depending on the City's future seasonal use patterns.

3.5.2 Raw Water Ground Storage Tank

Raw water from the Tivoli Wheeling and Leland Storm Water Pump Stations will be stored at the Alexander Avenue WMS in a 3.0 MG GST. During Project 4B, surface water from Lake Monroe will also be pumped to the raw water GST. The 3 MG GST will be provided with an overflow that will drain to the new stormwater pond around the GST. The GST drain and a raw water turnout using motorized valves will also allow discharging raw stormwater to the stormwater pond. The stormwater pond will be sized to accommodate flows collected from the Alexander Avenue WMS and the Tivoli/Wheeling and Leland sites. Therefore, if the raw water GST is full and a rainfall event occurs, the stormwater from the Tivoli/Wheeling and Leland Stormwater Pump Stations will be either routed directly to the stormwater pond or the GST will overflow in the stormwater pond. Bypass piping and isolation valves will also be provided so that a portion of flow can bypass the raw water GST and be directed to the treatment facilities, and the remaining flows can be directed to the stormwater pond in the event the raw water GST is removed from service. Provisions will be made that will allow the raw water GST to be converted to a finished water GST in the future. Space located to the east of the 3.0 MG raw water GST will be allocated for a potential future 3 MG raw water or

finished water GST. The proposed location and layout of the Raw Water GST is shown in **Drawings D00102, D01101, D01301, D01302, and D01303** in **Appendix E**.

3.6 RAW WATER TRANSFER PUMP STATION (RWTPS)

Under normal operation, the raw water will be directed to the raw water GST. When the raw water GST is full, raw water can flow by gravity from the raw water GST directly to the downstream treatment processes. However as the water level in the raw water GST decreases the available static head will become insufficient to flow by gravity and the raw water will need to be pumped to the downstream treatment processes. On the suction side of the RWTPS will be a bypass line with a control valve. The control valve will open on the RWTPS bypass line when the water levels in the finished water GSTs reach an operator-selected minimum level. The control valve will modulate to maintain the operator selected flowrate. Once the valve is fully opened and the flowrate through the bypass decreases below an operator selected minimum flowrate, the control valve will close and the raw water transfer pumps will turn on. The raw water transfer pumps will turn off when the water level at the finished water GST reaches the minimum level or maximum level selected by the operator to allow gravity flow again.

The RWTPS will consist of two (2) 2.0-MGD and one (1) 1.0-MGD pumps. The raw water transfer pumps will be constant speed. The RWTPS pumps will be solids handling dry-pit submersible type pumps. The operator will select which pumps to turn on based on desired flow. The operator can select the following combinations and flowrates:

- One 700 gpm pump (1.0 MGD)
- One 1400 gpm pump (2.0 MGD)
- One 700 gpm pump and one 1400 gpm pump (3.0 MGD) and
- Two 1400 gpm pumps (4.0 MGD).

The operator should try to equalize wear on the equipment by alternating pumps. Pump run times should be monitored and used when determining pump operation.

An ultrasonic level indicator will be provided at the raw water GST to monitor the water level. A low level switch will be provided to shut the pumps off to prevent damage to the pumps. A magnetic flowmeter will measure and monitor flows to the downstream unit processes. Additionally, a high water level switch at the finished water GSTs will shut down the RWTPS to prevent overflow of the reclaimed water GSTs.

The operator could alternatively choose to bypass a portion of one or both water sources flows directly to the downstream treatment processes. The influent force mains from the stormwater pump stations and future Lake Monroe Pump Station will be combined and provided with a bypass to directly send flows to the downstream treatment processes. Since the potential flow from the stormwater pump stations into the Alexander Avenue WMS is up to 5,600 gpm (2,600 gpm/96-ft TDH firm capacity from the Tivoli Wheeling PS and 2,700 gpm/86-ft TDH from the Leland PS), which is greater than the RWTPS capacity (2,800 gpm), the flow control valves will be designed to allow only a portion of the flow to bypass the raw water GST and RWTPS. A motorized valve will be provided for the bypass line for the combined surface and stormwater flows to limit the amount of flow being sent directly to the downstream treatment processes. The control valve will modulate to maintain an operator-selected flowrate up to a maximum flowrate based on the corresponding RWTPS pumping rate measured by the magnetic flowmeter downstream of the RWTPS. The proposed layout of the RWTPS is shown in **Drawings D02101, D02301,** and **D02302** in **Appendix E** and the proposed pump design criteria is shown in **Table 3-2.**

Table 3-2. Raw Water Transfer Pump Station Design

Design Parameter	Design Criteria
Pump Type	Solids Handling Dry-Pit Submersible

Control	Constant Speed	Constant Speed
No of Pumps	1	2
Pump Capacity	700 gpm @ 31 FT TDH	1,400 gpm @ 33 ft TDH
Pump Speed	1,180 rpm	1,180 rpm
Power	7.5 HP	15 HP
Magnetic Flowmeter Size	16-inch	

The following safety features and alarms will be provided:

1. No flow alarm.
2. Emergency stop alarm.
3. Out of Service/HOA in OFF position.
4. Pump high motor temperature alarm
5. Pump seal leak alarm.
6. Raw water GST LLWL alarm and shut down.
7. Finished water GST high water level shutdown.

3.7 FILTRATION

3.7.1 Basis of Design

Solids will be removed using cloth media filters. The Aqua-Aerobic Aquadisk® Filter will be the basis of design. Aqua-Aerobics was provided with the Tivoli Wheeling Stormwater PS Stormwater and Lake Monroe Surface Water quality data to use as the basis for their filter design.

3.7.2 Filter Preliminary Design

Filter cloths are made of microfiber pile with a nominal filtration rating of 5 microns. Each filter unit will include:

- Painted steel tank assembly.
- Hinged drive assembly for rotating disks during backwash.
- Centertube assembly with cloth media disks.
- Backwash system including backwash shoes.
- Solids waste removal system.
- Backwash/waste pump assembly.
- Pressure transmitter to monitor the water level of the filter tank (0 to 100 inches H2O).
- Float switch to indicate emerging overflow level.
- Vacuum transmitter (0 to 30 in HG).
- Local control panel with PLC, HMI, and other internal components.

The normal flow path for the filters will be from the outside of the cloth frame to the inside and then will flow through the center tube out into the effluent chamber, over the effluent weir and into the effluent pipe. The filtered solids will be collected on the outside of the cloth media surface to allow for the direct contact of cleaning systems. Some

of the particulates removed are stored within the pile cloth media. As more particulates are deposited on and within the pile cloth media, the pressure required to drive water through the pile cloth media (headloss) increases. This results in a rise in the water level within the filter basin and increased differential pressure on the pile cloth media. Upon reaching a specific basin water level set point, the PLC automatically initiates the backwash mode to clean the pile cloth media.

The filtered effluent will be used for backwashing. The backwash function includes a pump that draws filter effluent through the cloth as the media disk rotates past the fixed backwash shoe, which removes the accumulated solids from the cloth surface. Each disk will be cleaned by a minimum of two backwash shoes, one on each side. Springs are used to maintain the proper tensioning of the backwash shoe against the media surface.

Each filter also includes a solids waste removal system in the floor of the filter tank. The manifold is designed to siphon settled solids waste for discharge through the backwash/waste pump(s). The operation of the solids waste removal system is automatic with user-adjustable intervals and duration through the operator interface at the control panel. Normal backwashing and solids waste discharge will not interrupt filtering. Backwash and solid waste will be pumped to the onsite plant drain pump station.

The operator will be able to adjust the following operating parameters through the HMI at the Local Control Panel:

- Backwash interval,
- Backwash duration,
- Solids waste interval,
- Solids waste duration, and
- Number of backwashes between solids wasting.

The operator interface screen will display the following filter system status information:

- Water level in the filter,
- Time since last backwash,
- Time since last solids waste withdrawal,
- Elapsed time on the drive motor,
- Elapsed time on the backwash/waste pump(s),
- Total backwash time and cycles, and
- Total solids waste withdrawal time and cycles.

Through the HMI, the operator will also be able to manually initiate the backwash process and control all electric actuated valves.

Two filter units will be installed during Project 4A. The filter will contain 8 disks to provide 2.0 MGD AADF of filtration capacity per filter unit. **Table 3-3** summarizes the filter design for the proposed filters for the Alexander Avenue WMS.

Table 3-3. Filter Design

Design Parameter	Design Criteria
Number of Basins	2
Maximum Head Loss Across Media	14 in.
Design Flow Capacity	4.0 MGD
One Filter Out Of Service Capacity	2.0 MGD
Average Influent TSS	15 mg/L
Maximum Influent TSS	35 mg/L
Peak Influent TSS	50 mg/L
Design Average Effluent TSS	< 5 mg/L
Filter Disks per Basin	8
Total Disk Quantity	16
Active Filtration Area Per Disc	53.8 sf
Total Filter Area	860.8 sf
Filter Area Per Basin	430.4 sf
Design Filtration Rate at 4 MGD flow	3.23 gpm/sf
Design Filtration Rate (One Filter Offline) at 4 MGD flow (occasional)	6.45 gpm/sf
Influent Solids (Ave. Influent TSS)	500 lb/day
Influent Solids (Max. Influent TSS)	1168 lb/day
Solids Loading Rate – Average	0.58 lb/day/sf
Solids Loading Rate – Maximum	1.36 lb/day/sf
Solids Loading Rate – Maximum (One Filter Offline)	1.55 lb/day/sf
Maximum Backwash Flow per Tank	260 gpm
Backwash Frequency (@ peak solids loading)	253 times/day
Daily Backwash Volume – Average	22,000 gallons
Daily Backwash Volume – Maximum	264,000 gallons

An access platform will be provided between the filters to provide access to the drive and motor located at the top of the filter unit. The layout of the units will mirror each other so both filters are accessible from the central platform. Filter tanks will be open at the top and an aluminum canopy will be provided over the filters **Drawings D06101, D06301, D06302,** and **D06901** in **Appendix E** show the layout of the filters.

3.7.3 Preliminary Bench Top Evaluation of Cloth Media Filter

Aqua-Aerobic Systems, Inc., the cloth media filter manufacturer, performed a bench top study of their filter media (AquaDisk®) with grab samples from the Tivoli Wheeling Stormwater PS and Lake Monroe. Two (2) five-gallon

buckets were collected for both the stormwater and surface water sources, which were then immediately sealed and shipped to the filter manufacturer. Stormwater was collected after a rain event that occurred on May 15, 2015 and the surface water was collected on May 20, 2015. Both samples, upon receipt, were transferred into clean plastic tanks within the laboratory and analyzed. The results of the preliminary water quality analyses performed by the filter manufacturer upon receipt of the samples are shown in **Table 3-4**.

Analyte	Units	Stormwater	Lake Monroe Water
Date of Collection		**May 15, 2015**	**May 20, 2015**
TSS	mg/L	13.1	11.9
Turbidity	NTU	5.05	13.4
Total Alkalinity	mg/L $CaCO_3$	60.4	64.8

Table 3-4. Water Quality Analyses on Source Water Grab Samples

For the stormwater sample, the 5 micron fabric filter media was able to reduce the TSS concentration to from 13.1 mg/L to 1.1 mg/L average (92% reduction rate) without the addition of any chemicals. Turbidity was reduced by 77% (1.15 NTU, average). However, the filter manufacturer recommends providing provisions for chemical addition (alum and polymer) and flocculation due to potential higher TSS loading events.

Lake Monroe did not have similar success with the reduction of TSS, where the same 5 micron fabric filter media only reduced TSS from 11 mg/L to 8 mg/L average, a 33% reduction rate without addition of chemicals. The lower reduction rate compared to the stormwater is likely due to filter clogging algae and other finer particles observed in the lake water sample. Such types of algae are generally difficult to effectively filter without chemical pre-treatment. Similarly, turbidity was only reduced by 22% to an average of 10.4 NTU. Sedimentation treatment will not be needed to reduce TSS loading to the filter when raw water TSS is below 35 mg/L max day loading.

Based on the manufacturer's experience with similar installations and the results of the study, Aqua-Aerobics recommends the addition of coagulants/flocculants and chlorine and the installation of a flocculation tank upstream of the filters for proper filter performance. Jar Testing is also recommended moving forward to determine the dosages of appropriate coagulants and flocculants. Dosing of these coagulants and flocculants will vary based on the influent solids characteristics, such as changes that occur during algal blooms in the surface water. See **Appendix C** for the Bench Top evaluation report and **Appendix A** for the filter process design report.

3.7.4 Filter-Aid Chemicals Pretreatment System

3.7.4.1 Chemical Injection

Two static mixers will be provided to mix the chemicals with the raw water upstream of the flocculation tank.

Alum and polymer will be added as a coagulant and flocculent during periods when there is high TSS content in the filtered effluent. Chemical injectors (diffuser assemblies) for alum will be provided in the second static mixer. Chemical injectors for polymer will be provided downstream of the second static mixer. The operator will be able to manually select which injection point to use, using manual ball valves on the injector piping.

Algae may be present in source water delivered to the filter. It is recommended to reduce algal content in source water to as low a level as possible to limit its effect on filter performance. Sodium hypochlorite is provided for algae reduction. Sodium hypochlorite will be injected at the first static mixer upstream of the alum and polymer mixer to ensure the sodium hypochlorite is well-mixed prior to injecting the alum and polymer.

The chemical feed pumps will be turned on/off by the operator based on the presence of algae in the source water and/or observed TSS at the effluent of the filters. The chemical feed rates for sodium hypochlorite, alum, and

polymer will be flow paced. Sodium hypochlorite flow can also be controlled on a feedback loop based on the concentration measured at the filter inlet.

3.7.4.2 Alum and Polymer Feed and Storage

Alum and polymer are added, when needed, as a coagulant during periods when there is high TSS content in the filtered effluent. Preliminary sizing for the alum and polymer storage and feed facilities is based on dosages from a Bench-Scale Filtration study by Aqua-Aerobics Systems at the DeLand Water Reclamation Facility. Jar testing will be required to determine appropriate dosages for this application. Alum will be stored on-site in double wall high density polyethylene (HDPE) storage tanks. According to the Recommended Standards for Wastewater Facilities (10 States Standards), a minimum 10 days of alum storage for phosphorus removal is recommended. Although alum at this facility is not for phosphorus removal, the application is similar (coagulation, flocculation for enhanced settling/floc formation), and thus minimum storage recommendation is considered appropriate. The storage tanks are sized to store 20 days of chemical at average daily flow demands. The HDPE storage tanks will be installed outside on a concrete slab. A metal canopy will be provided to protect the tanks from UV rays.

Alum and polymer feed pump skids and polymer storage drums will be housed inside a building. The chemical feed building will be a 24-foot by 11-foot (interior dimensions) pre-cast concrete building capable of withstanding wind speeds of 150 MPH with Risk Category III and Wind Exposure C in compliance with the latest Florida Building Code. The building will be similar to the ammonia storage and feed buildings recently installed at twelve of the City's WTPs.

The proposed polymer feed system is an integrated equipment package that automatically meters, dilutes, and feeds a liquid polymer and water solution. The system includes a metering pump, a water flow regulator, and a mixing chamber. The polymer feed pump will be capable of pumping emulsion-type polymers of anionic, non-ionic, or cationic types with viscosities of up to 10,000 CPS.

Table 3-6 summarizes the basis of design for the alum and polymer storage and feed facilities. **Drawing D03101** in **Appendix E** shows the proposed layout for the alum and polymer storage and feed facilities. Alum and polymer will be injected in the static mixer and downstream of the static mixer, respectively, located in the raw water line upstream of the flocculation tanks. Under a separate task authorization, Tetra Tech is currently performing jar testing, which may alter the chemicals proposed to be used for coagulation and flocculation considering low alkalinity of source water and other factors.

Static mixers can be constructed of FRP, stainless steel, or epoxy coated steel. Tube type FRP static mixers are recommended, similar to the recently installed static mixers at the City's WTPs. The mixers will be the same size as the upstream and downstream piping.

3.7.4.3 Pre-Filter Sodium Hypochlorite Injection

The filter manufacturer recommends a dosing rate producing a free chlorine residual of 1.0 mg/L at the entrance to the filters when sodium hypochlorite is fed upstream of the flocculation tank. On-line chlorine dosing to facilitate a free chlorine residual of 1.0 mg/L after 15 minutes of hydraulic retention time at maximum design flow is requested by the filter manufacturer to kill the algae, aid in flocculation, and to prevent algae growth on the filter media. **Table 3-5** shows the design dosages and feed rates. Since the residence time in the flocculation tank will vary based on the flow and chlorine demand varies with residence time, different dosages will be required at different flow rates to achieve a 1 mg/L chlorine residual at the filter inlet. Sodium hypochlorite dosage in **Table 3-5** uses the chlorine demand for applicable residence times based on Chlorine Demand/Decay Testing (Section 2.4) findings. When two dosages are given in a table, the first number is based on stormwater chlorine demand and the second number is based on surface water chlorine demand.

The chlorine level just upstream of the filters will be monitored by a chlorine analyzer. The inlet pipes to each filter will be provided with sample taps piped to the chlorine analyzer. The chlorine level should be the same entering

both filters, so only one of the sample locations will need to be analyzed. Solenoid valves will be provided for the operator to select which filter the sample is pulled from. This is necessary in case only one filter is operational. The measurement from the analyzer can be used to automatically adjust the dose to achieve a set residual concentration. The analyzer will be mounted between the two filter units. The sodium hypochlorite will be injected into a separate mixer upstream of the polymer and alum injection point to prevent any undesirable direct chemical interaction.

Table 3-5. Pre-Filter Sodium Hypochlorite Metering Pump Capacity

Parameter	Low Flow Feed Rate Conditions	Average Flow Feed Rate Conditions
Flow to Filters	1.0 mgd	4.0 mgd
Residence Time	60 minutes	15 minutes
Stormwater/Surface Water NaOCl Dosage Rate	5.35/7.15 mg/L as Cl_2	3.25/2.65 mg/L as Cl_2
Stormwater/Surface Water NaOCl Feed Rate as Cl_2	44.6/59.2 lbs/day as Cl_2	108.4/88.4 lbs/day as Cl_2
Stormwater/Surface Water NaOCl Pumping Rate	1.8/2.4 gph (12.5 % solution)	4.4/3.4 gph (12.5 % solution)

3.7.4.4 Flocculation Tanks

The filter manufacturer requires a flocculation tank with slow mixing and a minimum 5 minute retention time at maximum flow. At a maximum flow of 4.0 MGD, the flocculation tank would need to be 14,000 gallons. Flow from the flocculation tank to the filters will be by gravity. The water surface elevation in the flocculation tank will need to be approximately 16 feet above the proposed grade. Additionally, typical design parameters to optimize performance such as width, length and depth of the tank and number of stages were considered for the flocculation tank. To stay within typical length to width and depth ratios, providing a minimum recommended 2-stages and assuming this is met with a tank with the bottom at grade, a two-stage tank, each stage 13 feet long by 13 feet wide tank is proposed. The resulting total volume will provide approximately 15 minutes of detention time at 4.0 MGD. Although this is greater than the required 5 minutes recommended by Aqua-Aerobics, it is more aligned with typical flocculation detention times of 15 to 20 minutes for direct filtration systems. For proper mixing, maintaining recommended length to width and length to depth ratios is recommended. Slow gentle mixing will be provided to aid the flocculation in the tank.

As an alternative, 650 linear feet of buried 24-inch diameter piping, located downstream of the chemical injection points and static mixer was considered. This piping would provide 5 minutes of flocculation time upstream of the filters. The flocculation tank would take up less space but includes mechanical and electrical equipment that needs to be maintained. Installation of a flocculation tank is proposed as recommended by the filter manufacturer based on concerns of solids settling and clogging the pipe. Additionally, it reduces the potential for excessive solids loading to the filters and higher flows due to resuspension of solids settled inside the pipe. The layout of the proposed flocculation tank is shown in **Drawings D04101, D4301, and D4302** in **Appendix E**.

Table 3-6. Alum and Polymer Storage Tanks and Metering Pumps Design

Parameter	Alum System	Polymer
Number of Storage Tanks	2	2
Bulk Storage Tank Volume	4,500 gallons (min)	250 gallons
Days of Supply	20	
Tank Material	HDPE	---
Containment	Double Wall Tank	Containment Pallets
Manufacturer	PolyProcessing, Snyder, or equal	---
Number of Pumps (incl. 1 standby)	2	2
Type	Peristaltic Hose	Peristaltic Hose
Design Capacity	19.6 gph	0.81 gph
Design Pressure	15 psi	15 psi
Motor Power, each	0.5 HP	0.25 HP
Hose Material	Nitrile or polypropylene	Viton or Marprene or
Control	VFD	SCR
Turndown	5:1	20:1
Model	Ragazzini S16	Polyblend M-Series by UGSI Chemical Feed, Inc. VeloBlend by Velodyne, or equal
Pump Capacity	20 gph	0.85 gph (neat polymer) 600 gph (dilution water)

3.7.5 Suspended Solids Monitoring and Control

Solids in the filter effluent will be monitored using TSS probes in each of the filter effluent pipes. If the TSS in the combined filter effluent is greater than 5 mg/L, the water will be rejected and sent back to the raw water GST for retreatment. Water will be directed to the raw water GST via automatic motorized valves on the discharge piping of the FWTPS that will open and close accordingly to stop flow to the reclaimed water GST and divert it back to the raw water GST. The finished water transfer pumps will continue to pump to the raw water GST until the TSS concentration is reduced to below 5 mg/L for an operator adjustable period (not less than 15 minutes) at which time the automatic motorized valves will open and close accordingly to stop returning treated water back to the raw water GST and return sending the finished water back to the reclaimed water GST.

Alternatively, when the effluent TSS from a filter is greater than five mg/L, the inlet valve will close stopping flow to that filter. If the TSS from both filters is greater than five mg/L the raw water transfer pumps will shut down stopping flow to the treatment system, until the operator restarts the system.

3.8 PLANT DRAIN PUMP STATION

The plant drain pump station will collect backwash water from the filters and pump backwash water to an existing 4-inch force main to the Deltona Lakes WRF for further treatment. The plant drain and filter backwash pump station will be a typical duplex type lift station with constant speed submersible type pumps. Two (2) pumps will be provided, under normal operation, one duty and one standby but also capable of being operated as lead/lag. The wetwell will be sized to attenuate backwash flows from the filters to the WRF. The pump capacity and wetwell volume was selected based on maintaining a velocity of approximately 5.0 fps in the 4-inch force main. Drains from the flocculation tanks, filters and chlorine contact tank will also discharge to the plant drain pump station. To prevent overflowing the pump station when draining, the operator should throttle the drain valve to limit the flow from the process tanks to approximately 180 gpm. The operator should also monitor the filters to ensure there is sufficient time between backwash cycles for the wetwell to drain. **Table 3-7** summarizes the basis of design for the plant drain pump station.

Table 3-7. Plant Drain Pump Station Design

Design Parameter	Project 4A & 4B
Wetwell Type	Circular Precast
Wetwell Diameter	10 ft
Wetwell Depth	20 ft
Pump Type	Submersible
Control	Constant Speed
No. of Pumps	2
Pump Capacity	184 gpm
Total Dynamic Head	108 feet
Power	15 HP

During a backwash cycle, backwash water from the filter will be pumped to the plant drain and filter backwash pump station. Once the level in the wetwell reaches a predetermined height, set by a level switch, the lead pump will turn on. When the level reaches a higher level switch the lag pump will turn on. At the level the lag pump comes on a high water level alarm will be sent to SCADA. Once the level drops to a predetermined low liquid level, the pump(s) will shut off. The vendor supplied control panel will have two lights a red light and a green light. When the level in wet well is below the high water level or level where the lag pump switches on the light will be green. When the water level is above the high water level the light will be red. A high-high level switch will be to let the operator know that the tanks are being drained too quickly. An alarm will also be sent to SCADA. A low-low level switch will be provided to shut the pumps off to prevent damaging the pumps. The “lead”-“lag” designations for the plant drain pumps shall automatically alternate on a daily basis to equalize wear on the equipment. A magnetic flow meter will be provided on the discharge of the pump station for monitoring and recording purposes.

The following safety features and alarms will be provided:

1. No flow alarm.
2. Seal leakage pump shutdown and alarm.
3. High motor temperature alarm.
4. Emergency Stop Alarm.
5. Out of Service/HOA in OFF position.

6. LLWL alarm.
7. HHWL alarm.

Tetra Tech started the plant drain pump station hydraulic analysis with a planning level hydraulic model that was generated for the City of Deltona 10-Year Wastewater Master Plan (July 2008, Tetra Tech). Proposed Alexander Ave WMS plant drain pump station was added to the hydraulic model. Several scenarios with respect to plant drain pump station and LS 29 ON/OFF were simulated. The velocity in the 4" FM downstream from the drain pump station connection point is estimated to range from 5.1 to 7.9 fps.

The estimated flows from LS 29 are 198 gpm/120 gpm when the plant drain pump station is off/on, respectively. The model-estimated LS 29 discharge flow and pressure with one pump operating (and drain pump station off) are estimated to be 198 gpm at a discharge pressure of 27 psi. Monitoring system pressure at the LS 29 discharge or drain pump station connection point is recommended to verify or update the model-generated results prior to using the model generated results for final design of the plant drain pump station.

3.9 DISINFECTION AND FINISHED WATER PUMPING SYSTEMS

3.9.1 Existing Chlorine Feed & Storage System

The existing facilities are equipped with one (1) 2,500 gallon double-wall sodium hypochlorite storage tank and two (2) skid-mounted sodium hypochlorite feed pumps. See **Tables 3-8** and **3-9** below.

Table 3-8. Existing Sodium Hypochlorite Storage Tank Design

Description	Value
NaOCl Solution Strength	12.5% by weight, maximum
Number of Storage Tanks	1 tank
Bulk Storage Tank Volume	2,500 gallons
Tank Material	Cross-linked HDPE with Oxidation Resistant Liner
Containment	Double Wall Tank
Manufacturer	PolyProcessing

Table 3-9. Existing Sodium Hypochlorite Metering Pumps Design

Parameter	Value
Number of Pumps (including one standby)	2
Type	Peristaltic Hose
Design Capacity	8.5 gph
Design Pressure	60 psi
Motor Power, each	0.5 HP
Hose Material	Viton
Control	VFD, Loop Controller
Turndown	10:1
Model	Ragazzini S10

The existing facilities are designed to re-chlorinate reuse water entering the GST (if needed). The feed rate is flow paced based on a signal from the flow meter measuring the flow into the tank. The metering pump controller is also capable of controlling flow based on the chlorine residual feedback from the chlorine analyzer. Tetra Tech's understanding is that this is a maintenance only feed point and will not be utilized when this facility is producing reuse quality water.

3.9.2 Improvements to Existing Feed & Storage System

Based on the sodium hypochlorite storage and feed requirements a second sodium hypochlorite storage tank similar to the existing tank will be installed to provide enough volume for 15 days of storage. Two (2) new feed pumps similar in size to the existing, but with a higher maximum flowrate will be provided to send sodium hypochlorite to the CCCs. Since sodium hypochlorite feed is also required upstream of the filters simultaneously with feed at the CCCs and at a different dosing rate, separate feed pumps will be required to dose chlorine upstream of the filters. The existing sodium hypochlorite feed pumps will be used for this purpose. The new feed pumps will be peristaltic hose pumps like the existing pumps and will be located in the existing pump station building near the existing pumps and sodium hypochlorite storage tank. A new duplex pump skid with higher pump capacity than the existing pumps (13 gph) will be provided. Pumps will be the same as the existing pumps except for the higher flow rate. New pumps are sized so that one pump can meet the maximum feed requirement to the CCC. The prefilter sodium hypochlorite needs can be met by a single 8.5 gph pump. The minimum required feed rate for the CCC is 1.8 gph, which, based on a 10:1 turndown, can be met by the 13 gph pumps. The minimum required feed rate for the pre-filter feed point is 0.9 gph, which, based on a 10:1 turndown, can be met by the 8.5 gph pumps.

New double-contained chemical piping will be installed between existing feed pumps and the pre-filter static mixer and between the new pumps and the injection point upstream of the CCC.

Table 3-10 shows the total sodium hypochlorite storage requirements for 4.0 MGD treatment capacity. As can be seen in the table, the existing 2,500 gallon tank combined with the new 2,500 gallon tank (total of 5,000 gallons) has enough capacity for 15 days of storage for 4.0 MGD feed points.

Drawing D07101 in **Appendix E** shows the layout of the new sodium hypochlorite storage and feed equipment.

Table 3-10. Sodium Hypochlorite Storage Requirements

Project 4A	
Storage for PreFilter	1420 gallons
Storage for CCCs	3330 gallons
Total Storage	4750 gallons

3.9.3 Proposed Chlorine Contact Chambers (CCCs)

As discussed previously, high-level disinfection is required for a stormwater source to be used to supplement the public access reclaimed water system. FDEP Rule 62-600.440(5) states where chlorine is used for disinfection, the design shall include provisions for rapid and uniform mixing, and maintaining a total chlorine residual of at least 1.0 mg/L shall be maintained at all times. Additionally a minimum "CT" of 25 as described in Section 3.3 shall be met at all times. The minimum acceptable contact time shall be 15 minutes at the peak design flow.

Sufficient contact volume will be provided during Project 4A to meet a minimum contact time of 15 minutes at the Project 4A design flow of 4.0 MGD. To meet the minimum "CT" requirements, the sodium hypochlorite feed facilities will be designed to maintain a minimum 1.67 mg/L chlorine residual. Sodium hypochlorite will be added to static mixer at the head of the CCCs. **Table 3-11** shows the design information for the CCCs. **Drawing D08101** and **Drawing D08901** in **Appendix E** show the proposed CCC Layout and 3D view.

Table 3-11. Chlorine Contact Basins Design

Parameter	Design Criteria
Design Flow (MGD)	4.0
CT (min-mg/L)	25
Chlorine Residual (mg/L)	1.0
Contact Time (minutes)	25
Number of Channels	2
Channel Depth (ft)	7.5
Channel Length (ft)	154
Channel Width (ft)	4.5

The design chlorine dose was estimated using the average 1-hour chlorine demand for stormwater and Lake Monroe surface water and adding a 1.5 safety factor and the required residual of 1.0.

Table 3-12 shows the demand and chlorine residuals required for both Phases 4A and 4B for the CCCs. **Table 3-13** shows the potential cases and the associated chlorine doses used for design. **Tables 3-14** and **3-15** show the chlorine dosages and feed rates of stormwater and blended stormwater/Lake Monroe, respectively.

Table 3-12. Chlorine Contact Basins Chlorine Demand

	1-hr Chlorine Demand	Demand SF	Residual (4 MGD)
Stormwater	2.9	1.5	1.0
Surface Water	4.1	1.5	1.0
Average Storm/Surface Water	3.5	1.5	1.0

Table 3-13. Chlorine Contact Basins Design Chlorine Doses

Case	Condition	Dose (mg/L as Cl_2)
Project 4A Average	Stormwater Only	6.02
Project 4B Average	50% Stormwater/ 50% Surface Water	6.92
Project 4B Maximum	100% Surface Water	7.82

Table 3-14. Stormwater Disinfection Metering Pump Capacity

Parameter	Low Feed Rate Conditions	High Feed Rate Conditions
Filtered Water Flow	1.0 mgd	4.0 mgd
NaOCl Dosage Rate	5.35 mg/L as Cl_2	6.02 mg/L as Cl_2
NaOCl Feed Rate as Cl_2	44.6 lbs/day as Cl_2	201 lbs/day as Cl_2
NaOCl Pumping Rate	1.8 gph (12.5 % solution)	8.4 gph (12 % solution)

Table 3-15. Blended Stormwater/Lake Water Disinfection Scenarios

Parameter	Low Feed Rate Conditions	Average Feed Rate Conditions	High Feed Rate Conditions
Filtered Water Flow	1.0 mgd	4.0 mgd	4.0 mgd
NaOCl Dosage Rate	6.92 mg/L as Cl_2	6.92 mg/L as Cl_2	7.82 mg/L as Cl_2
NaOCl Feed Rate as Cl_2	58 lbs/day as Cl_2	231 lbs/day as Cl_2	261 lbs/day as Cl_2
NaOCl Pumping Rate	2.3 gph (12.5 % solution)	9.3 gph (12.5 % solution)	10.9 gph (12 % solution)

3.9.4 Chlorine Residual Monitoring and Control

A sample pump will pull from the FWTPS clearwell, send flow to a new chlorine analyzer located in the existing HSP building, and recycle it back to head of CCC. If the chlorine residual is too low, automatic control valves will open/close as needed to stop flow going to the finished water GSTs and redirect the flows to the raw water GST. The chlorine dose to the CCCs will also be increased. Once the residual chlorine level reaches the set point, the finished water transfer pumps will resume pumping to the GSTs.

3.9.5 Chemical System Materials

The chemical piping will be labeled per 10-States Standards color coding guidelines. The chemical system area will have the required hazardous area warning signs. The chlorine, alum and polymer pump skid material will be PVC. Buried yard piping for sodium hypochlorite chemicals will be a dual contained system of PVC tubing with nylon braid reinforcement or Teflon inside a solvent welded Schedule 80 PVC casing pipe. A series of pre-cast concrete hand-holes will serve as junction boxes. The material for exposed chlorine pipe will be Schedule 80 PVC. Buried and exposed alum and polymer piping will be Schedule 80 PVC. The isolation valves for all chemical applications will be ball valves (vented for sodium hypochlorite service). The gaskets, seat and seal materials for sodium hypochlorite service will be Teflon or Viton or other suitable material. The gasket seat, and seal materials for alum and polymer applications will be Teflon or other suitable material for the chemical service. Non-metallic pipe supports will be used. Chemical injection station for alum, polymer and sodium hypochlorite downstream of the raw water transfer pump station will be designed above grade with PVC injectors. Diffusers upstream of the rapid mix basins at the CCCs will feed sodium hypochlorite for disinfection.

3.9.6 Finished Water Transfer Pump Station (FWTPS)

Three (3) vertical turbine finished water transfer pumps will be provided. Two (2) pumps will be rated at 2.0 MGD. The third pump will be rated at 1.0 MGD.

Water will overflow the CCC effluent weirs into the clearwell. The finished water will then be pumped by constant speed vertical turbine pumps to the GSTs. Automatic valves will be provided to open/close as needed to return substandard effluent (low chlorine residual or high TSS) to the raw water GST for retreatment. Refer to **Drawing D08101** in **Appendix E** for the finished water transfer pump station layout and **Table 3-16** for the proposed pump design criteria.

Table 3-16. Finished Water Transfer Pump Station Design

Design Parameter	Design Criteria	
Pump Type	Vertical Turbine	
Control	Constant Speed	
No of Pumps	1	2
Pump Capacity	700 gpm @ 30 ft TDH	1400 gpm @ 30 ft TDH
Pump Speed	1180 rpm	1180 rpm
Power	10 HP	20 HP

The FWTPS pumps will be automatically turned on/off based on predetermined water levels in the wetwell. The "lead"-"lag" designations for the finished water pumps shall automatically alternate on a daily basis to equalize wear on the equipment.

Level switches will be provided to turn the pumps on and off. A low level switch will be provided to shut the pumps off to prevent damaging the pumps. Effluent chlorine residual will be monitored at the wetwell. A sample pump will continuously pump finished water to a chlorine residual analyzer at the existing HSP building. If the chlorine residual drops below an operator selected value (minimum 1.0 mg/L, will vary depending on contact time) or the filter effluent TSS exceeds an operator-adjustable value (maximum 5.0 mg/L), the automatic control valve on the pipe to the reclaimed water GST will close and the automatic control valve to the raw water GST will open to redirect flows to the head of the treatment facility for retreatment. Additionally, a high water level alarm at the raw water and finished water GSTs will shut down the FWTPS as well as the RWTPS, as appropriate.

The following safety features and alarms will be provided:

1. No flow alarm.
2. Emergency Stop Alarm.
3. Out of Service/HOA in OFF position.
4. LLWL Alarm.
5. HHWL Alarm.
6. Low chlorine residual.
7. High TSS shutdown.
8. Reclaimed Water Ground storage tank high water level.

3.10 RECLAIMED WATER GROUND STORAGE TANK

The new reclaimed water GST will be a 1.0 MG CROM prestressed concrete tank similar to the existing GST.

Since the existing tank does not have a designated inlet for the finished water, some modifications to the existing tank and/or piping are needed to provide an inlet for the finished water produced by this facility. A variety of options were considered. If a hydraulic flow split is desired between the tanks, the same inlet type should be provided for both the existing and proposed tanks. In order to avoid a large variation in the head, the discharge of the inlet pipe should be located near the top of the tank (i.e. a stand pipe discharge). In order to achieve this, flow must enter through a standpipe inside the tank or a pipe entering from the top of the tank. A new standpipe will be installed inside the existing tank. This will require taking the tank out of service and boring under the tank to install the piping.

Alternatively, the finished water main could be tied into the tank fill line downstream of the pressure-sustaining valve from the reuse system. A pressure sustaining valve would be provided on the finished water main to maintain adequate backpressure at the FWTPS. For final design, considering cost, uniformity, and reasonable downtime, it was determined that a new standpipe inside the existing GST would be provided.

The new tank will be provided with standpipe to match the changes made to the existing tank. The drain lines to the existing and new storage tanks will be interconnected to equalize water levels within the two tanks. Isolation valves will be provided to allow one tank to be drained and maintain the remaining tank in service. The proposed layout of the finished water GSTs is provided in **Drawing D09101 in Appendix E**.

Overflow pipe from both GSTs will be connected, metered and routed to the RIBs distribution piping as shown on **Drawing D00102** in **Appendix E.**

3.11 HIGH SERVICE PUMP STATION & TREATMENT PLANT CAPACITIES

The existing HSPs are variable speed centrifugal type pumps. The pumps deliver finished water from the existing GST to the City's reclaimed water system. The pump station also has accommodations provided for the installation of an additional pump in the future. There are no anticipated modifications to the existing HSP station under this project's scope of work. Information on the existing pump system is provided in **Table 3-17**.

Table 3-17. Existing High Service Pump Station Design

Parameter	Value
Number of Pumps (including one standby)	4 (2 + 1 Jockey Pump + 1 Future)
Design Capacity (each pump)	2,100 gpm
Jockey Pump Design Capacity	700 gpm
Current Station Firm Capacity	2,800 gpm (4 MGD)
Future Station Firm Capacity	4,900 gpm (7 MGD)
Design Head	196 Feet
Motor Power, each	150 HP; 50 HP (jockey)
Total (current)	350 HP (total)
Firm (current)	200 HP (duty)

The final buildout capacity of the treatment facilities including the GSTs was evaluated to see if it could meet peak supply capacity based on the future firm capacity of the HSP station for a duration of 6 hours. For this evaluation the firm capacity was defined as having the largest HSP and the largest GST out of service. The total volume required at a peak flow of 7 MGD for 6 hours is 1.764 MG (7 MGD x 0.25 days). The treatment facilities can produce 1 MG in 6 hours at the design capacity. If this is added to the 1 MG stored in a full GST, the peak demand will be met. Therefore, a treatment capacity of 4.0 MGD AADF with storage will be adequate to supply reclaimed water at a 7.0 MGD HSP station firm capacity during peak hours.

3.12 OPERATION AND CONTROL STRATEGY

The following operation and control strategy is proposed:

- The primary goal of the treatment facilities is to maintain operator selected water levels in the onsite GSTs, provided there is raw water in the raw water GST and the finished water GSTs are not full. If these conditions are met, the raw water pump station will start one 1.0 MGD pump followed by turning on one 1.0 MGD pump at the finished water transfer pump station. The operator will be able to turn on more pumps to fill up GSTs at a faster rate (up to 4.0 MGD) from local PLC.
- Flow from the off-site stormwater pump stations and future Lake Monroe pump station may discharge directly downstream of the RWTPS via flow control valves. The operator will be able to control the flow through a modulating flow control valve, and excess flow will go to the raw water GST.
- To send flows from the raw water storage tank to the treatment facilities, the operator will indicate desired flow and call the RWTPS to start. Initially, automatic control valves will open/close as needed to bypass the RWTPS and flow by gravity to the downstream treatment processes. If the liquid level in the raw water GST

is insufficient to meet the flow setpoint by gravity flow, the automatic control valves will open/close as needed to redirect flow to the RWTPS and the pumps will turn on.

- The operator will decide based on the effluent TSS levels to inject up to three filter-aid chemicals (chlorine, alum, and polymer) prior to filtration. If selected, the following operation and control strategy will be implemented:
    - If there is higher level of algae in the raw water, the pre-filter chlorine feed system will be turned on to maintain about 1 mg/L entering the filter. Pre-filter chlorine will be injected at the first static mixer using compound loop feed control. The chlorine feed system will use a raw water flow rate measured by a magnetic flow meter on the 16-inch discharge raw water main and a free chlorine residual measured by chlorine analyzer just upstream of the filters.
    - When needed, the operator selected dose of alum and polymer will be flow paced just upstream of the flocculation tank using the same raw water pump station flow (measured by the magnetic flow meter).
- Remote monitoring of the double-walled alum storage tank leakage or chemical levels will not be necessary; the tanks will be manually inspected and levels will be logged using local storage tank staff gauges.
- Flocculation – Two slow speed mixers in the two flocculation tanks will be started when the raw water pump station is ON and flow meter senses flow. The operator will manually adjust to optimal speed to encourage floc formation without breaking after a visual observation from the top of the flocculation tanks.
- Filter – TSS will be monitored at the filter effluent pipe. In normal operation, the filter backwash cycle will be initiated at the high water level in the filter, which subsequently lowers the water level in the filter. The raw water transfer pumps will automatically shut down when the water level in the filter reaches the preset level between high water level and overflow level to prevent overflow and troubleshoot the issue. As an added precaution, the filter inlet valve will be closed to isolate the affected filter. The filter inlet valve can also be set to close when the effluent TSS from the filter is greater than 5 mg/L or whatever TSS setpoint is entered.
- Chlorine Contact Chamber - Chlorine will be fed into the static mixer just upstream of the CCC. Chlorine feed rates will continue to be adjusted using the raw water flow rate and chlorine residual feedback from the finished water transfer pump station clearwell. Chlorine feed rates will be compound loop (flow and free chlorine residual).
- Finished Water Transfer Pump Station (FWTPS) – The FWTPS will operate based on the wet well water level. Typically, when the RWTPS is not being bypassed, the same number and capacity pumps will be operating in both the raw water and finished water pump stations. When the RWPS is being bypassed the pumps will turn on and off strictly based on level. The first pump to start will be the 1 MGD pump. When the reclaimed water GSTs level reaches the operator selected high water level, both pump stations will be turned off. During a reject event (high TSS or low chlorine), automatic control valves to the reclaimed water GSTs and raw water GST will open/close to direct flows back to the raw water GST until the finished water meets spec (< 5 mg/L TSS, and $\geq$ 1 mg/L free chlorine residual). Alternatively, the RWTPS and FWTPS will shut down until the operator can attend to the alarms and resolve any issues.
- The SCADA control room at the Deltona Lakes WRF will monitor and control flow rate, chlorine residual levels and receive alarms. All the feed rate adjustments will be made remotely and locally. Free chlorine residuals will be continuously monitored before the filters and in the finished water transfer pump station clearwell.

Existing local PLC in the HSP room will be modified to add new algorithms to operate and control the treatment facilities. Existing site antenna will be used to transmit flow, chlorine residual, pump status (including chemical metering pumps), and alarms to SCADA control room located in the Deltona Lake WRF.

The chlorine residual will be measured at locations shown in **Table 3-18** for monitoring and control purposes.

Table 3-18. Compound Loop Chlorine Residual Monitoring and Control

Chlorine Residual Sampling Location	Parameter	Measuring Purpose
Filter Influent Pipes	Free Chlorine (2)	Monitoring and Control (Process Control)
Finished Water Transfer Pump Station Clearwell	Free Chlorine (1)	Monitoring and Control (Regulatory)

3.13 OTHER MISCELLANEOUS IMPROVEMENTS

3.13.1 Electrical Building

The electrical equipment will be installed in a 20-foot by 11-foot (interior dimensions) pre-cast concrete building capable of meeting wind speeds of 150 MPH with Risk Category III and Wind Exposure C in compliance with the latest Florida Building Code. The building will be similar to the ammonia storage and feed buildings recently installed at twelve of the City's Water Treatment Plants; however, the exterior finish will be standard aggregate finish or match the exterior of the existing HSP building. Since there is only one small variable frequency drive for this project, air conditioning will not be provided. A minimum 300 cfm exhaust fan will be provided for ventilation. The exhaust fan will be sized to provide at least six air changes per hour inside the building. A 2 foot by 2 foot louver will be provided to supply air into the building.

3.13.2 Water Supply and Sanitary System

There are no sanitary system anticipated as part of this project. An existing 6-inch main will supply water to the new facilities. A 3-inch potable water pipe will be extended from the onsite water line to feed water to emergency eyewash and showers, hose bibs, and other site uses. A reduced pressure backflow device followed by a flow meter will be installed on the 3-inch water main.

3.13.3 Landscaping and Irrigation System Design

As this project is interior of the property, no significant landscaping is proposed. The site will be stabilized and sodded following construction activities. An irrigation system is not included in this project.

3.14 SITE CIVIL IMPROVEMENTS

The Alexander Avenue WMS is located east of I-4, north of Debary Avenue, on the northwest corner of Alexander Avenue and Windbrook Drive, in Section 31, Township 18 South, Range 31 East, Deltona, Volusia County at latitude 28°52'47.51" N and longitude 81°15'1.45" W. Refer to Sheet **C00100** of **Appendix E** for proposed site improvements and the surrounding property features and stabilized roadways. Stormwater improvements are planned to provide a source of reuse water for the City. Existing ponds will be converted to ribs in future and a new pond established to receive off-site (pumped) stormwater for reuse.

3.14.1 Site Plan

The site was master planned by the City in the initial phase of development. The proposed continuation of the existing master plan will be followed for this phase of development. Access to the facility and security of the site will

not be affected by the proposed development. The addition of a new stormwater pond and associated piping, stabilized access roads, sidewalks, and treatment facilities will be included in the design improvements for the site as discussed above.

3.14.2 Site Grading, Paving, and Drainage Plan

The drainage basin will be composed of the proposed stormwater system and the treatment facilities. The new stormwater system has the capacity to store approximately 10.0 MG up to the top of berm at elevation 90.0 feet (NAVD 88) to replace the approximately 5.7 MG of volume from the existing permitted stormwater ponds (New RIBs 6 & 7) and include the storage considerations for the proposed additions to the treatment facility. The proposed 3 MG ground storage tank will accommodate any excess of volume from the existing ponds if required. Grading of the proposed stormwater system and treatment structures will include reshaping the existing berms and slopes of the existing low area to elevation 83.0 feet (NAVD 88) and creating a stormwater pond to serve the new facilities and existing permitted flows. On site runoff will be combined into the influent drainage from the proposed facilities area. The intent of this facility is to utilize the excessive runoff as reuse water from two (2) stormwater pump stations. An emergency overflow system, refer to **Drawing C00104** and **Drawing C00502**, **Detail 1** of **Appendix E,** will be constructed to allow volume of water greater than ponds design capacity at maximum water elevation to discharge without causing a catastrophic failure to the pond system. It is the intent that the emergency overflow system, will not be used during normal operation. Water volume will be managed to the greatest extent possible to control the water elevation at the high water condition of elevation 90.0 feet (NAVD 88) and Leland-Tivoli Wheeling pumps will be utilized to drawdown the water if condition required.

The stormwater system will have a control structure (ST-1) designed to a maximum high water level elevation at 89.0 feet (NAVD 88), refer to **Drawing C00104** and **Drawing C00501, Detail 7** of the **Appendix E**. Stage storage information is provided in stage-storage table provided on **Drawing C00104**, **Appendix E**. The bottom of the stormwater system will be the bottom of the existing low area with an average elevation of 82.0 feet (NAVD 88) as shown on **Drawings C00104** and **C00105**, **Appendix E**, however, stage-storage volumes were calculated only from elevation 84.0 feet (NAVD 88) (Estimated Average Ground Water Elevation) due to considerations made on the geotechnical report, **Appendix B,** and the Hydrogeological Evaluation in this report, **Index 3.4.3**.

Approximately 1,850 lineal feet of access dirt roads will be improved or added to the site. The proposed improvements will consist of a stabilized road section composed of 4” thick layer of gravel and a 10” thick layer of compacted base. These improvements are designed so that the access roads will have sufficient structural and geometric design to accommodate delivery and emergency trucks. Refer to **Drawings C00104, C00105** and **C00501, Detail 6** in **Appendix E**.

To complete the Project 4A earthwork, it is anticipated that approximately 28,000 cubic yards (CY) of borrow material will be needed. This estimated fill material does not include cut/fill needs for the southeast corner area for the future 3.0 MG raw storage tank. Typically, this borrow material is imported from offsite sources. However, the City has indicated that there is adequate soil available at the Alexander Avenue WMS to use as borrow material and there is an estimate of 26,000 cubic yards (CY) of excess fill material available from the proposed “Rapid Infiltration Basins, Phase II”, at the same location of the Project 4A. Therefore, 2,000 cubic yards of fill material will be covered from on-site excavated clean material and/or soil imported from offsite sources for the construction of this project. However, the net cut/fill needs will be updated as the project moves forward with the final design.

3.14.3 Stormwater Management

The FDEP performs review of water and wastewater facilities for the Environmental Resource Permit (ERP) program. The ERP process regulates activities such as constructing stormwater treatment and attenuation, wetland impact and mitigation for impacted wetlands, if any are required.

Although the FDEP maintains regulatory authority over ERPs for water and wastewater facilities, the Deltona Eastern WRF and associated infrastructure are located within the SJRWMD and FDEP review will utilize the

standard stormwater management regulations of the SJRWMD. The existing facility has an ERP permit (**ERP 64-0316816**) through the FDEP and has one original permit and two (2) modifications allowing raw stormwater to be pumped to the site.

The original permit set the ground work for the site including rapid infiltration basins and dry retention stormwater areas for the overall site. The first modification to the permit was to include a GST and HSP building on the Alexander Ave site. In this modification a small retention was developed to capture and treat stormwater from the GST and HSP building. The second modification to the permit included the pumping of flood control water from the Leland Drive PS. This allows the Leland PS to pump flood waters to the dry retention area on the Alexander Avenue WMS.

The small retention area that was set aside for stormwater treatment in the first modification for the GST and pumps was developed in the area surrounded by the RIBs expansion. The basis of the proposed Project 4A design will be to increase the size of the stormwater basin and combine the drainage from new and existing impervious area into the one stormwater basin. Stormwater will be pumped to this site from the offsite basins into the proposed stormwater basin, contingent upon water storage availability. An additional 3 MG raw water storage tank will be utilized to store some of the stormwater when the system is full. The offsite stormwater will be discharged to the proposed permitted retention area. The combined stormwater will be collected and used to augment the reclaimed water needed for the City's reuse programs. Treatment of the stormwater to public access reuse standards will be required for discharge to the City's reuse system.

It is anticipated that the site will need additional soil material for the construction of the berms and tank foundation as well as other site development considerations, and this material will be provided as described in **3.14.2**. It is assumed that the existing material excavated from the site and nearby areas will be suitable for construction purposes, although final testing of the material will be completed at the time of construction to meet the design concept.

Future stormwater connections to this facility are being explored by the City, if operations of this facility show that additional stormwater volume is practical to be treated and used by the facility, further connections will be considered. If added, it is recommended to keep the permitted stormwater disposal system active to use when needed. This design did not address the future connections and additional design considerations may be necessary to make the connections.

3.15 ELECTRICAL IMPROVEMENTS

3.15.1 Electrical Distribution

3.15.1.1 Existing Electrical System

The site is currently fed from a Duke Energy owned 500 KVA, loop fed, 480 volt secondary transformer. Duke Energy's primary feeder cables to the transformer are below grade.

The existing HSP/electrical building is fed from this transformer with 3 parallel sets of 350 kcmil conductors. Jeff Herring at Duke Energy informed Tetra Tech that the load on the existing transformer is currently only 290 KVA. The existing loop fed transformer has the ability to accept 16 parallel sets of conductors on the load side of the transformer. The existing electrical circuits on the site are fed from this existing electrical building.

3.15.1.2 Existing Site Emergency Generation

The existing electrical building currently has stand-by emergency power via an existing 350 KW generator. The 350 KW generator was only sized to run the existing HSP loads and will not have enough spare capacity to run the new electrical building. The new electrical building will not have emergency stand-by power.

3.15.1.3 New Electrical Building

The new electrical building will be powered by replacing the existing Duke Energy 500 KVA transformer with a new 1000 KVA pad mounted transformer. 2 parallel sets of 350 kcmil conductors will be run from the secondary of the new transformer to a new 600 amp, circuit breaker S.E.R. (Service Entrance Rated) disconnect on the exterior of the new electrical building. The site is currently primary voltage metered and a new utility meter will not be installed at the new electrical building.

The electrical building will be comprised of a 480 volt, 600 amp, motor control center (MCC), see **Drawing E00401 in Appendix E**. The MCC will power the new 480 volt motor loads and a 75 KVA, 480 volt to 120/208 volt transformer feeding a new 42 pole, 225A power panel.

The 120/208 volt power panel will supply power for a local exhaust fan, air handler unit in the electrical room, convenience receptacles, electrical room lighting and additional 120 volt and 208 volt motor loads. A 100 amp breaker in the electrical room panel will feed a 100 amp sub panel located in the new chemical building.

3.15.1.4 Wiring and Conduits

Conduits will be fed from the electrical room throughout the site, see **Drawing E00101** in **Appendix E**, to power the loads via underground concrete encased duct banks. New handholds will be supplied as needed to facilitate long electrical pulls.

Conduits below grade will be schedule 40 PVC and conduits above ground shall be rigid aluminum conduit.

3.15.2 Grounding and Lightning Protection

A new 4/0 bare tinned-copper counterpoise ground loop will be installed around the new electrical building. Four new 3/4-inch x 20-foot ground rods will be added at each corner. The new counterpoise will be connected to the existing site grounding counterpoise.

Class 1 lightning protection will be installed on the electrical building per NFPA 780 and connected to the grounding counterpoise. Lightning protection will involve lightning rods on top of electrical building and two down leads down the side of the building. Lightning protection cable will be installed in schedule 80 PVC conduit down side of electrical building.

3.15.3 Site Lighting

New site lighting will be added at the new processes. New site lighting will be comprised of LED light fixtures with photometric cells mounted on 8 foot poles. Site lights located at processes will be controlled by an H-O-A (Hand-Off-Auto) switch. In Hand, switch light will turn on manually. In Auto, light will be controlled by photocell.

3.16 INSTRUMENTATION & CONTROL IMPROVEMENTS

3.16.1 Control System

The Reclaimed Water Augmentation Facility (RWAF) Control Panel will be located in the new Electrical Building. The RWAF control panel will house an Allen Bradley CompactLogix controller (PLC) and a PanelView Plus touch screen with overview and equipment screens for remote monitoring and control of the pumps, packaged systems, alarm displays, setpoints, and analytical instruments. Input and output modules will be added to the Allen Bradley CompactLogix controller, located in the existing control panel of the HSP station electrical building, in order to provide supervisory control over the new equipment added to the HSP building. The existing PanelView Plus touch screen located on the HSP control panel will be replaced with a larger PanelView Plus touch screen for monitoring and controlling of the entire facility from the HSP station electrical building. Additional relays and signal isolators will be provided in the HSP control panel to interface with the RTU which is managed by the City. The integrator will be

required to coordinate with the City in order to provide adequate points to the RTU to provide control and feedback from the main at the Deltona Lakes WRF. The integrator will also be responsible for updating the WRF primary control system and HMI programs for control, monitoring, trending, reports, and alarms. Motor operated valves (MOV) will be 480 volt 3 phase.

3.16.2 Instrumentation

Instrumentation will be provided for monitoring of systems and operations. All analog signals will be 4-20 ma. Surge Suppression will be provided on all analog and digital signals. Level sensors or level switches will be provided for monitoring the GST, wet well levels and control of the associated pumps. Two (2) flow meters will be provided to monitor raw water flow to the filter system and onsite potable water use. There is an additional flow meter on the line to the Reclaimed water GST and on the discharge from the plant drain pump station. Analytical instruments will include TSS and chlorine residual. Currently, there is no intention of providing HART or other smart instrumentation.

3.17 PROJECT SCHEDULE

The proposed Project 4A schedule is documented below:

- ERP and Wastewater Permitting Package Submittal to FDEP – September 2016
- Bidding – January to March 2017
- Construction (16 months) – April 2017 to July 2018

4.0 PERMITTING

This Section briefly discusses the anticipated permit applications and supporting documentation to the FDEP and the City of Deltona as required to obtain permits for construction of the project.

Tetra Tech prepared for and attended a pre-application meeting with the FDEP and a representative of the City on June 04, 2015. The following is a list of key points discussed during the meeting:

- Online finished water quality will be monitored for TSS and free chlorine residual. Off-spec (high TSS and low chlorine) water will be pumped back to the 3 MG raw water GST.
- Existing Deltona Lakes WRF wastewater permit will be modified by adding a new treatment facility supplying supplemental reclaimed water. Existing reuse protocol needs to be updated to add a new supplemental source to the reuse system. Source of supplemental water will be stormwater in Project 4A and blended stormwater and surface water in Project 4B.
- Existing Environmental Resource Permit (ERP) No. ERP64-0316816 for the Alexander Ave site will be modified.
- The FDEP wastewater permit fee is $1,000.
- Prior to injecting any new source of reuse water to the RIBs, FDEP shall be contacted to ensure that the water quality is satisfactory to be disposed of via the RIBs.
- The project, if approved, may be cooperatively funded by the SJRWMD with a cost-share agreement with the City. The City is in the process of applying for an SRF loan for Project 4A. Project 4A has been ranked #12 of 49 projects selected for SJRWMD cost – share funding for the fiscal year 2016 – 2017
- FDEP color coding guideline and other FDEP Rule 62-610-472 F.A.C. requirements for using stormwater and surface water as supplemental reuse source shall be implemented (as discussed in Section 3.9.5).

4.1 FLORIDA DEPT. OF ENVIRONMENTAL PROTECTION (FDEP) WASTEWATER PERMIT

Tetra Tech will complete FDEP Wastewater Permit Application Forms 1 and 2A for the proposed improvements as a “Substantial Modification” to the existing facilities.

4.2 ENVIRONMENTAL RESOURCE PERMIT

Prepare and submit an application for a permit modification to the FDEP ERP for the Alexander Avenue WMS. Per Rule 40C-1.603(5)(d)(1), the Major ERP Modification permit fee is $245, which is 50% of the fee for a new permit.

4.3 OTHER PERMITS

4.3.1 FDEP Generic Permit for Stormwater Discharge from Construction Activities

The FDEP NPDES Notice of Intent (NOI) and Stormwater Pollution Prevention Plan (SWPPP) for erosion and sediment control during construction are required for construction activities that impact more than one (1) acre. Contractor will be required to prepare and submit the permit notification based on the design documents.

4.3.2 City of Deltona Building Department Permit

Tetra Tech will prepare and submit contract documents to the City Building Department for review and approval. The intent of this submittal is to obtain any comments from the Building Department prior to bidding and to streamline Building Department permitting to be performed by the Contractor.

4.4 PERMIT TIMING

Tetra Tech will apply for FDEP wastewater and ERP permits using the final PDR. Other permits will be applied by the Contractor using the conformed design drawings and specifications.

5.0 COST ESTIMATE

5.1 OPINION OF PROBABLE CONSTRUCTION COST

An opinion of probable construction costs (OPCC) was developed to determine an estimated project cost. This Section of the report provides a summary of the preliminary estimate of construction costs for Project 4A based on the anticipated project improvements as described in the previous sections. The cost estimates prepared by Tetra Tech included the following elements:

1. Major Equipment and Raw Material of Construction
2. Construction Labor Expenses
3. Contingency Factor

These estimated probable costs are expressed in current dollars (2016). These costs may be updated using the Engineering News Record (ENR) Construction Cost Index (CCI). The estimated probable construction is summarized in **Table 5-1**. The preliminary OPCC is $9.9 million. The OPCC is higher than initial conceptual estimates, primarily due to the new treatment processes (e.g. raw water GST, flocculation tank, filter-aid chemical feed and storage system, plant drain pump station), and involved project complexity as included in the PDR (i.e. yard piping and support systems).

Table 5-1. Opinion of Probable Construction Cost

Item No.	Process/Description	Value ($)
1	Raw Water Ground Storage Tank	$1,260,000
2	Raw Water Transfer Pump Station	$433,000
3	Flocculation Tank	$345,000
4	Filters	$905,000
5	Chlorine Contact Basin and Finished Water Transfer Pump Station	$540,000
6	Reclaimed Water Ground Storage Tank	$712,000
7	Modifications to Existing Ground Storage Tank	$45,000
8	Sodium Hypochlorite Facilities	$111,000
9	Chemical Building	$399,000
10	Plant Drain Pump Station	$310,000
11	Electrical Building Including Electrical and HVAC Equipment	$226,000
12	Yard Piping	$718,000
13	Electrical and I&C	$432,000
14	Upgrades to Existing Stormwater Pumps	$150,000
15	Civil/Site Work	$680,000
16	Overhead and Profit (15%)	$1,090,000
17	Mobilization / Demobilization (4%)	$291,000
18	General Requirements (4.5%)	$327,000
19	Subtotal	**$8,974,000**
20	Contingency (10%)	$897,000
TOTAL		**$9,871,000**

5.2 EQUIPMENT, RAW MATERIALS AND LABOR

Costs of equipment and installation were based on prices obtained from equipment manufacturers, their representatives or data collected during similar past projects. These costs are subject to change due to variable factors such as the economy, energy costs and raw material availability. Actual equipment selection is also subject to change during final project design. Operating warranties from equipment manufacturers have a non-assignable cost benefit. These beneficial costs were not included in the project's construction cost estimate.

Similar to equipment costs, raw material and labor costs are also subject to changes in the economy and energy costs.

5.3 CONTINGENCY FACTOR

A contingency factor of 10 percent was included in the estimated construction cost. The contingency factor is generally added to a construction cost estimate to account for unknown factors, which may not have been taken into account during the preliminary design activities. An example of an unknown factor may include unexpected regulatory changes or bidding delays. Contingency will be reduced in final design.

Appendix A

Equipment Vendor Proposals

1. Cloth Media Filters

AQUA-AEROBIC SYSTEMS, INC.
Partnering for Solutions

February 9, 2016

Correspondence ID#: AAL-34033
Tetra Tech
Attn: Rashesh Shah, P.E.
201 East Pine Street, Suite 1000
Orlando, Florida 32801
USA
Ph# 407/480-3926, Fax# 407/839-3790
Email: rasesh.shah@tetratech.com

Project: LAKE MONROE-DELTONA RWW FL
RE: Proposal #143132 dated February 9, 2016
For the City of Deltona, Alexander Ave WMS Improvement Project 4A

Mr. Shah,

Enclosed please find our proposal for the AquaDisk® Cloth Media Filter equipment, freight, and supervision services for the above referenced project.

Please take a moment to review our proposal package for Aqua-Aerobic Systems' equipment terminations and items not included in Aqua-Aerobic Systems' scope of supply which are to be provided by the Owner or Owner's Installation Contractor.

We appreciate the opportunity to submit our proposal for this project and look forward to discussing it with you in detail. Please feel free to contact me (phone: 815-639-4462; email: dbrady@aqua-aerobic.com) or our sales representative firm (listed below) if you have any questions regarding our proposal.

Sincerely,

Dawn Brady

Dawn Brady
Application Engineer

CC: EnviroSales of Florida, Inc. / ph#: 863/314-0616 / fx#: N/A
Sam Gutridge / Sam@envirosalesofflorida.com

Aqua-Aerobic Systems, Inc.
Paul Nelson / PNelson@aqua-aerobic.com

AQUA-AEROBIC SYSTEMS, INC.
Partnering for Solutions

Proposal#: 143132

TO: **CITY OF DELAND, FL** **PROJECT: LAKE MONROE-DELTONA RWW FL**

ATN: **COST ESTIMATOR** **PROPOSAL DATE: February 9, 2016**

CC: **EnviroSales of Florida, Inc. / ph#: 863/314-0616 / fx#: N/A**
Sam Gutridge

Aqua-Aerobic Systems - Regional Manager / ph#: 815/639-4554 / fx#: 815/654-2508
Paul Nelson

The following Notes apply to Aqua-Aerobic Systems' proposal:

- We are pleased to quote, for acceptance within 90 days of the proposal date, prices and terms on equipment listed below.
- Equipment will be furnished by Aqua-Aerobic Systems, Inc. with unloading of goods, civil work, and installation by the Buyer.
- The equipment/goods furnished by Aqua-Aerobic Systems will be as described in this proposal.

Cloth Media Filters

AquaDisk Tanks/Basins

2 AquaDisk Model # ADFSP-54x8E-PC Package Filter Painted Steel Tank(s) consisting of:

- 8 disk tank(s) will be painted steel, estimated dry weight is 11,000 lbs., and estimated operating weight is 47,500 lbs. Each tank will include an integral solids waste collection manifold.
The tank finish will be:
Interior: Near white sandblast (SSPC-SP10), painted with Tnemec N69 polyamide epoxy (color safety blue) 2 coats 4-6 mils each for 8-12 mils DFT.
Exterior: Commercial sandblast (SSPC-SP6), painted Tnemec N69 Hi-Build Epoxoline II (color safety blue) 2 coats 3-4 mils each, 1 coat Tnemec 1075 Endura-Shield II, 2-3 mils for 8-11 mils DFT.
- 3" threaded brass ball valve(s).

AquaDisk Centertube Assemblies

2 Centertube(s) consisting of:

- 304 stainless steel centertube weldment(s).
- U.H.M.W. polyethylene multi segment driven sprocket(s).
- Dual wheel assembly(ies).
- Rider wheel bracket assembly(ies).
- 304 stainless steel effluent seal plate(s).
- Centertube bearing kit(s).
- Viton V-ring effluent port\centertube seal(s).
- Pile cloth media and non-corrosive support frame assemblies.
- Cloth will be OptiFiber PES-14.
- Disk segment 304 stainless steel support rods.
- Neoprene media sealing gaskets.

AquaDisk Drive Assemblies

2 Drive System(s) consisting of:

Copyright 2016, Aqua-Aerobic Systems, Inc

- AGMA class I gearbox(es) with three phase 3/4 HP drive motor(s).
- Nylon drive spocket(s).
- Acetal drive chain(s) with 304 stainless steel link pins.
- Stationary drive bracket weldment(s).
- Adjustable drive bracket weldment(s).
- Chain guard weldment(s).
- Warning label(s).

AquaDisk Backwash/Sludge Assemblies

2 Backwash System(s) consisting of:

- 304 stainless steel backwash shoe weldments.
- UHMW polyethylene backwash shoe nozzle plates.
- 304 stainless steel backwash shoe support weldment(s).
- 1 1/2" flexible hose.
- Stainless steel backwash shoe springs.
- Stainless steel hose clamps.

2 Backwash/Solids Waste Pump(s) consisting of:

- Gorman Rupp model 12B20-B, 2HP, premium efficient, 3 phase externally mounted centrifugal backwash/waste pump(s).
- 316 stainless steel anchors.
- 0 to 15 psi pressure gauge(s).
- 0 to 30 inches mercury vacuum gauge(s).
- Bronze throttling gate valve(s).
- 3" threaded brass ball valve(s).

AquaDisk Instrumentation

2 Pressure Transmitter(s) consisting of:

- Level transmitter(s).

2 Float Switch(es) consisting of:

- Float switch(es).

2 Vacuum Transmitter(s) consisting of:

- Vacuum transmitter(s).

2 TSS Monitoring Assembly(ies) consisting of:

- Hach Solitax TSS line sc stainless steel immersion probe with stainless steel wiper and electric cable.
- Hach SC200 controller and display module(s).
- 304 stainless steel mounting bracket weldment(s).
- 304 stainless steel transducer mounting pipe weldment(s).

AquaDisk Valves

2 Set(s) of Backwash Valves consisting of:

- 2" full port, three piece, ASTM A351 Grade CF8M stainless steel body ball valve(s), grooved end connections with single phase electric actuator(s). Valve / actuator combination shall be manufactured by TCI / RCI (RCI, a division of Rotork), Nibco, or equal.
- 2" flexible hose.
- 2" painted cast iron victaulic end couplers.

2 Solids Waste Valve(s) consisting of:

- 2" full port, three piece, ASTM A351 Grade CF8M stainless steel body ball valve(s), grooved end connections with single phase electric actuator(s). Valve / actuator combination shall be manufactured by TCI / RCI (RCI, a division of Rotork), Nibco, or equal.
- 2" flexible hose.
- 2" painted cast iron victaulic end couplers.

Copyright 2016, Aqua-Aerobic Systems, Inc

AquaDisk Misc/Spare Parts

1 Lot of Recommended Spare Parts consisting of:

- Pile cloth media and non-corrosive support frame assemblies.
- Cloth will be OptiFiber PES-14.
- Viton V-ring effluent port\centertube seal(s).
- 2" full port, three piece, ASTM A351 Grade CF8M stainless steel body ball valve(s), grooved end connections with single phase electric actuator(s). Valve / actuator combination shall be manufactured by TCI / RCI (RCI, a division of Rotork), Nibco, or equal.

AquaDisk Controls w/Starters

2 Conduit Installation(s) consisting of:

- Conduit will be rigid aluminum.

2 Control Panel(s) consisting of:

- NEMA 4X 304 stainless steel enclosure(s).
- Control panel enclosure will be painted white.
- Control panel sun shield assembly(ies).
- Circuit breaker with handle.
- 2 KVA Transformer(s).
- Uninterrupted power supply.
- Fuses and fuse blocks.
- Single phase circuit breaker(s).
- Line filter(s).
- GFI convenience outlet(s).
- Control relay(s).
- Selector switch(es).
- Push-To-Test pilot light(s).
- MicroLogix 1400 PLC(s).
- Ethernet switch(es).
- Power supply(ies).
- PanelView plus 6 700 with color touch screen display(s).
- Operator interface sun shield(s).
- Motor starter(s).
- Terminal blocks.
- Temperature sensor(s).
- Temperature transmitter(s).
- Air conditioner(s).
- Panel heater.
- UL label(s).

AquaDisk Engineering

6 Set(s) Documentation for the AquaDisk will be provided as described:

- Engineer's Approval Data (English language).

6 Set(s) Documentation for the AquaDisk will be provided as described:

- Operation & Maintenance Manuals (English language).

AquaDisk Supervision/Freight Domestic

1 Supervision Services and Freight Package(s) for the AquaDisk will be provided as follows:

- 4 Day(s) On Site for MECHANICAL SUPERVISION
- 1 Trip(s) for MECHANICAL SUPERVISION
- FREIGHT TO JOBSITE

The Following Notes apply to Aqua-Aerobic Systems' Proposal:

Copyright 2016, Aqua-Aerobic Systems, Inc

- SCHEDULE: We expect submittals to be completed and in transit to you within 4-8* weeks after receipt of order with acceptable terms and conditions and guarantee of payment. We expect receipt of approved engineer's submittal with release for manufacture within 4-8 weeks of our transmittal of submittal data. We expect shipment of equipment (transit time excluded) to be approximately 12-14* weeks from our receipt of approved engineer's submittal data and release for manufacture. Schedules may be adjusted at time of order placement, depending upon existing order backlog. *Weeks quoted are actual working weeks.
- Aqua-Aerobic Systems will be closed for the Christmas Holidays beginning approximately December 24, through approximately January 2nd.
- PRICE ESCALATION INDEX: Aqua-Aerobic Systems, Inc. reserves the right to re-evaluate the pricing quoted prior to order acceptance if; 1) a purchase order is received after the validity date stated in this proposal or, 2) the lead times stated in this proposal are exceeded. Any pricing adjustments required shall be based on a published materials cost index specific to the materials proposed.
- Materials and Services not specifically described/itemized in this proposal are not included in the quoted total price, and are to be supplied by the installing contractor/purchaser.
- Valve and line sizes are to be verified by the engineer based on actual line losses.
- All valve couplings of the backwash \ sludge installations shall be Victaulic grooved end type connections.
- All piping, supports, gaskets, and hardware beyond Aqua-Aerobic Systems' equipment terminations are to be supplied by the installing contractor/purchaser.
- Two backwash pumps, two gate valves, and two ball valves per filter ship loose. Interconnecting piping, wiring, and installation is to be supplied by the installing contractor/purchaser.
- All flanges or unions in the piping to service the equipment, are not included and are to be provided by the installing contractor/purchaser.
- Electrical wiring and supply power is to be supplied by the installing contractor/purchaser.
- Control panel ships loose and installation/field wiring of the control panel is to be supplied by the installing contractor/purchaser.
- CONTROLS NON-DISCLOSURE / CONFIDENTIALITY AGREEMENT: If applicable, Aqua-Aerobic Systems will provide information relating to software documentation to control the treatment system supplied using Aqua-Aerobic Systems' proprietary and/or trade secret information subject to execution of an Aqua-Aerobic "Controls Non-Disclosure / Confidentiality Agreement".
- Freeze protection may be required for outdoor installation in cold weather climates. All such protection, including but not limited to, heat tracing and insulation of pumps and piping, as well as protection against internal tank freezing shall be provided and installed by the installing contractor.
- Filter gravity flow hydraulics and plant's capability to handle the backwash wastewater at 130 gpm per pump while not exceeding maximum of 12 feet of water pump discharge pressure is to be confirmed by the purchaser/Purchaser's Consulting Engineer.
- Aqua-Aerobic System's proposal is based upon supply of equipment models noted in this proposal. If equipment shipment date is critical, models may be revised to meet the required shipping date.
- Supervision services included in Aqua-Aerobic Systems' proposal are based upon supply of the quantity of trips and days stated. Additional supervision services can be provided for an additional charge of $1200/day plus travel and living expenses.
- Single phase motors will be 115 volt.
- Three phase motors will be 460 volt.

The Following Notes apply to Aqua-Aerobic Systems' Proposal:

- F.O.B. JOBSITE; TITLE AND RISK OF LOSS: All prices and all shipments of goods are F.O.B. Jobsite City Location. It is the responsibility of the Buyer to unload shipments and utilizing the packing list and bill of lading provided with the shipment notate shortages/damages upon receipt of the shipments and notify Aqua-Aerobic in writing within 7 days of the shortages/damages to facilitate filing of a freight claim. Delivery of the goods sold hereunder by the carrier shall be deemed delivery to Buyer, and upon such delivery, title to such goods and risk of loss or damage shall be upon Buyer.

- TAXES: State and/or local taxes are not included in the price but will be charged unless we receive a valid resale/exemption certificate.

- INTEGRAL DOCUMENTS: The following documents are an integral part of Aqua-Aerobic Systems' proposal:
1. Aqua-Aerobic Systems' Design # 143132 and Design Notes dated 2016-02-09 (copy included).

Copyright 2016, Aqua-Aerobic Systems, Inc

2. Aqua-Aerobic Systems' drawing numbers 9112282A6000 to 9112282A6004 dated 2016-02-03 (copies included) are an integral part of this proposal.
3. Aqua-Aerobic Systems' specifications dated 2016-02-09 (copy included).

- ASSIGNMENT OF CONTRACT: If applicable, Aqua-Aerobic would agree to an assignment of contract to the Owner's selected General Contractor provided: 1) the contract includes the stipulation that Contractor, by law, is required to complete and return Aqua's Credit Application and provide Aqua with a copy of the Payment/Performance bonds, 2) Contractor has a satisfactory credit rating/surety of payment, (3) The terms and conditions remain as agreed between Aqua and the Owner (No additional or conflicting terms and conditions of the Contractor will apply) and 4) Assignment of the contract must be in writing and executed by authorized personnel of the Owner, Aqua-Aerobics, and the Contractor.

- TRADEMARKS: Aqua-Aerobic, AquaSBR, Aqua-Jet, Aqua-Jet II, AquaDDM, Fold-a-Float, Endura Series, Aqua EnduraDisc, Aqua EnduraTube, Aqua CB-24, AquaCAM-D, AquaEnsure, IntelliPro, AquaExcel, Aqua MixAir, AquaPASS, Aqua MSBR, AquaMB Process, Aqua-Aerobic MBR, Aqua UltraFiltration, Aqua MultiBore, OxyMix, Aqua BioMax, AquaDisk, AquaDrum, AquaDiamond, Aqua MegaDisk, AquaDrum, Aqua MiniDisk, OptiFiber, OptiFiber PES-13, OptiFiber PA2-13, OptiFiber ACR-13, OptiFiber PES-14, AquaABF, Turbilite, and the Aqua-Aerobic logo are registered trademarks or pending trademarks of Aqua-Aerobic Systems, Inc. All other products and services mentioned are trademarks of their respective owners.

GOODS QUOTED ABOVE WILL BE SOLD SUBJECT ONLY TO THE TERMS AND CONDITIONS OF SALE SET FORTH HEREIN. ANY DIFFERENT OR ADDITIONAL TERMS ARE HEREBY OBJECTED TO.

Total Price: **$560,000**

Copyright 2016, Aqua-Aerobic Systems, Inc

TERMS AND CONDITIONS OF AQUA-AEROBIC SYSTEMS, INC.

Page 1 of 2

This offer and all of the goods and sales of Aqua-Aerobic Systems, Inc. are subject only to the following terms and conditions. The acceptance of any order resulting from this proposal is based on the express condition that the Buyer agrees to all the terms and conditions herein contained. Any terms and conditions in any order, which are in addition to or inconsistent with the following, shall not be binding upon Aqua-Aerobic Systems, Inc. This proposal and any contract resulting therefrom, shall be governed by and construed in accordance with the laws of the State of Illinois, without regard to conflicts of laws principles.

PAYMENT
Unless specifically stated otherwise, quoted terms are Net 30 Days from shipping date. Past-due charges are 1.5% per month and will apply only on any past-due balance. Aqua-Aerobic Systems, Inc. does not allow retainage of any invoice amount, unless authorized in writing by an authorized representative of our Loves Park, Illinois office.

DURATION OF QUOTATION
This proposal of Aqua-Aerobic Systems, Inc. shall in no event be effective more than 30 days from date thereof, unless specifically stated otherwise, and is subject to change at any time prior to acceptance.

SHIPMENT
Shipping dates are not a guarantee of a particular day of shipment and are approximate, being based upon present production information, and are subject to change per the production schedules existing at time of receipt of purchase order. Aqua-Aerobic Systems, Inc. shall not be responsible for any delay in shipment for causes beyond its control including, but not limited to, war, riots, strikes, labor trouble causing interruption of work, fires, other casualties, transportation delays, modification of order, any act of governmental authorities or acts of God. Quoted shipment dates in this proposal are approximate dates goods will be shipped and, unless agreed to in writing by Aqua-Aerobic Systems, Inc., Buyer may not postpone or delay the dates of shipment of goods from our plant or from our supplier's plants beyond the dates set forth in this proposal.

TITLE AND RISK OF LOSS
All prices and all shipments of goods are F.O.B. Aqua-Aerobic Systems, Inc.'s plant at Loves Park, Illinois unless specifically stated otherwise. Delivery of the goods sold hereunder to the carrier shall be deemed delivery to the Buyer, and upon such delivery, title to such goods and risk of loss or damage shall be upon Buyer.

TAXES
Prices quoted do not include any taxes, customs duties, or import fees. Buyer shall pay any and all use, sales, privilege or other tax or customs duties or import fees levied by any governmental authority with respect to the sale or transportation of any goods covered hereby. If Aqua-Aerobic Systems, Inc. is required by any taxing authority to collect or to pay any such tax, duty or fee, the Buyer shall be separately billed at such time for the amounts Aqua-Aerobic Systems, Inc. is required to pay.

INSURANCE
Unless the goods are sold on a CIF basis, the Buyer shall provide marine insurance for all risks, including war and general coverage.

SECURITY
If at any time the financial responsibility of the Buyer becomes unsatisfactory to Aqua-Aerobic Systems, Inc., or Aqua-Aerobic Systems, Inc. otherwise deems itself insecure as to receipt of full payment of the purchase price from Buyer hereunder, Aqua-Aerobic Systems, Inc. reserves the right to require payment in advance or security or guarantee satisfactory to Aqua-Aerobic Systems, Inc. of payment in full of the purchase price.

LIMITATION OF ACTION
No action shall be brought against Aqua-Aerobic Systems, Inc. for any breach of its contract of sale more than two years after the accrual of the cause of action thereof, and, in no event, unless the Buyer shall first have given written notice to Aqua-Aerobic Systems, Inc., of any claim of breach of contract within 30 days after the discovery thereof.

CANCELLATION CLAUSE
No acceptance of this proposal, by purchase order or otherwise, may be modified except by written consent of Aqua-Aerobic Systems, Inc. nor may it be cancelled except by prior payment to Aqua-Aerobic Systems, Inc. the following sums as liquidated damages therefore: 1) If cancellation is prior to commencement of production and prior to the assumption of any obligations by Aqua-Aerobic Systems, Inc. for any materials or component parts, a sum equal to 15% of the total purchase price; 2) If cancellation is after the commencement of production or after the assumption of any obligations by Aqua-Aerobic Systems, Inc. for any materials or component parts, a sum equal to the total of the direct, out-of-pocket expenses incurred to the date of cancellation for labor, machine time, materials and any charges made to us by suppliers for cancellation, plus 30% of the total purchase price. All charges and expenses shall be as determined by Aqua-Aerobic Systems, Inc. In the event any items are used by Aqua-Aerobic Systems, Inc. to fill a subsequent order, then upon receipt of payment for such order, Aqua-Aerobic Systems, Inc. shall pay the Buyer a sum equal to the direct out-of-pocket expenses previously charged and received from Buyer.

PROPRIETARY INFORMATION
This proposal, including all descriptive data, drawings, material, information and know-how disclosed by Aqua-Aerobic Systems, Inc. to Buyer in relation hereto is confidential information intended solely for the confidential use of Buyer, shall remain the property of Aqua-Aerobic Systems, Inc. and shall not be disclosed or otherwise used to the disadvantage or detriment of Aqua-Aerobic Systems, Inc. in any manner.

Copyright 2016, Aqua-Aerobic Systems, Inc

TERMS AND CONDITIONS OF AQUA-AEROBIC SYSTEMS, INC.

QUALIFIED ACCEPTANCE AND INDEMNITY

In the event the acceptance of this proposal by Buyer either is contingent upon or subject to the approval by any third party such as, but not limited to, a consulting engineer, with respect to goods, parts, materials, descriptive data, drawings, calculations, or any other matter, then upon such approval by any third party, Aqua-Aerobic Systems, Inc. shall have no liability to Buyer or to any third party so long as the goods sold and delivered by Aqua-Aerobic Systems, Inc. conform to this proposal. In the event any such third party requires modifications in the proposal prior to the approval thereof, Aqua-Aerobic Systems, Inc. may at its sole option and without liability to any party elect to cancel this proposal or return the purchase order to Buyer. In the event Aqua-Aerobic Systems, Inc. elects to modify this proposal to conform to the requirements for approval by any third party, Aqua-Aerobic Systems, Inc. in such event shall have no liability to Buyer or to any third party so long as the goods sold and delivered by Aqua-Aerobic Systems, Inc. conform to this proposal as modified.

Buyer agrees to indemnify and save harmless Aqua-Aerobic Systems, Inc. from and against all costs and expenses and liability of any kind whatsoever arising out of or in connection with claims by third parties so long as the goods sold hereunder conform to the requirements of this proposal as approved by any third party.

WARRANTY; LIMITATION OF LIABILITY; AND DISCLAIMER

In return for purchase and full payment for Aqua-Aerobic Systems, Inc. goods, we warrant new goods provided by us to be free from defects in materials and workmanship under normal conditions and use for a period of one year from the date the goods are put into service, or eighteen months from date of shipment (whichever first occurs). If the goods include an "Endura Series" motor, the complete Endura Series unit shall be warranted by Aqua-Aerobic to be free from defects in materials and workmanship under normal conditions and use for three years from the date the product is put into service or 42 months from the date of shipment (whichever occurs first).

OUR OBLIGATION UNDER THIS WARRANTY IS EXPRESSLY AND EXCLUSIVELY LIMITED to replacing or repairing (at our factory at Loves Park, Illinois) any part or parts returned to our factory with transportation charges prepaid, and which our examination shall show to have been defective. Prior to return of any goods or its parts to our factory, Buyer shall notify Aqua-Aerobic Systems, Inc. of claimed defect, and Aqua-Aerobic Systems, Inc. shall have the privilege of examining the goods at Buyer's place of business at or where the goods have otherwise been placed in service. In the event this examination discloses no defect, Buyer shall have no authority to return the goods or parts to our factory for the further examination or repair. All goods or parts shall be returned to Buyer, F.O.B. Loves Park, Illinois. This warranty shall not apply to any goods or part which has been repaired or altered outside our factory, or applied, operated or installed contrary to our instruction, or subjected to misuse, chemical attack/degradation, negligence or accident. This warranty and any warranty and guaranty of process or performance shall no longer be applicable or valid if any product, including any software program, supplied by Aqua-Aerobic Systems, Inc., is modified or altered without the written approval of Aqua-Aerobic Systems, Inc. Our warranty on accessories and component parts not manufactured by us is expressly limited to that of the manufacturer thereof.

THE FOREGOING WARRANTY IS MADE IN LIEU OF ALL OTHER WARRANTIES, EXPRESS OR IMPLIED, AND OF ALL OTHER LIABILITIES AND OBLIGATIONS ON OUR PART, INCLUDING ANY LIABILITY FOR NEGLIGENCE, STRICT LIABILITY, OR OTHERWISE; AND ANY IMPLIED WARRANTY OF MERCHANTABILITY OR FITNESS FOR A PARTICULAR PURPOSE IS EXPRESSLY DISCLAIMED; AND WE EXPRESSLY DENY THE RIGHT OF ANY OTHER PERSON TO INCUR OR ASSUME FOR US ANY OTHER LIABILITY IN CONNECTION WITH THE SALE OF ANY GOODS PROVIDED BY US. THERE ARE NO WARRANTIES OR GUARANTEES OF PERFORMANCE UNLESS SPECIFICALLY STATED OTHERWISE.

UNDER NO CIRCUMSTANCES, INCLUDING ANY CLAIM OF NEGLIGENCE, STRICT LIABILITY, OR OTHERWISE, SHALL AQUA-AEROBIC SYSTEMS, INC. BE LIABLE FOR ANY INCIDENTAL OR CONSEQUENTIAL DAMAGES, COSTS OF CONNECTING, DISCONNECTING, OR ANY LOSS OR DAMAGE RESULTING FROM A DEFECT IN THE GOODS. LIMIT OF LIABILITY: AQUA-AEROBIC SYSTEMS, INC.'S TOTAL LIABILITY UNDER THE ABOVE WARRANTY IS LIMITED TO THE REPAIR OR REPLACEMENT OF ANY DEFECTIVE PART. THE REMEDIES SET FORTH HEREIN ARE EXCLUSIVE, AND OUR LIABILITY WITH RESPECT TO ANY CONTRACT OR SALE, OR ANYTHING DONE IN CONNECTION THEREWITH, WHETHER IN CONTRACT, IN TORT, UNDER ANY WARRANTY, OR OTHERWISE, SHALL NOT, IN ANY CASE, EXCEED THE PRICE OF THE GOODS UPON WHICH SUCH LIABILITY IS BASED.

Final acceptance of this proposal must be given to Aqua-Aerobic Systems, Inc. at their office in Loves Park, Illinois. Please acknowledge acceptance by signing the proposal and returning it to Aqua-Aerobic Systems, Inc.

Accepted by:

Company: _____

By: _____ **Date:** _____

Offer Respectfully Submitted,

Dawn Brady

Dawn Brady, Application Engineer
Aqua-Aerobic Systems, Inc.

Copyright 2016, Aqua-Aerobic Systems, Inc

PROCESS DESIGN REPORT

AQUA-AEROBIC SYSTEMS, INC.

LAKE MONROE-DELTONA RWW FL

Design#: 143132

Option: Bid Design

Designed By: Dawn Brady on Tuesday, February 9, 2016

The enclosed information is based on preliminary data which we have received from you. There may be factors unknown to us which would alter the enclosed recommendation. These recommendations are based on models and assumptions widely used in the industry. While we attempt to keep these current, Aqua-Aerobic Systems, Inc. assumes no responsibility for their validity or any risks associated with their use. Also, because of the various factors stated above, Aqua-Aerobic Systems, Inc. assumes no responsibility for any liability resulting from any use made by you of the enclosed recommendations.

Copyright 2016, Aqua-Aerobic Systems, Inc

Design Notes

Filtration

- The cloth media filter recommendation is based upon the following conditions (as shown on the design sheet): 15 mg/l average daily influent TSS and 20 mg/l peak influent TSS. Inflow to the filters consists of stormwater. This water will be held upstream of the filters in a 15 million gallon lined reservoir with a 3:1 side slope. Alum and polymer will be added in a floc tank prior to the filters.

- The anticipated filtered effluent quality is based on the filter influent conditions as shown under "Design Parameters" of this Process Design Report. In addition, the filter influent should be free of algae and other solids that are not filterable through a nominal pore size media. Provisions to treat algae and condition the solids to be filterable are the responsibility of others.

- For this application, pile filter cloth is recommended.

- The cloth media filter system design is based on each unit processing 50% of the peak design flow.

- On-line chlorine dosing to facilitate a free chlorine residual of 1.0 mg/l after 15 minutes of hydraulic retention time at maximum design flow is recommended to kill the algae, aid in flocculation, and to prevent algae growth on the filter media.

- The capability to add metal salts (typically alum or ferric) and/or polymer ahead of the Cloth Media Filter is recommended. In addition, adequate mixing and at least 5 minutes retention time at the maximum daily flow must be provided as part of the chemical feed system. The chemical dosage should be flow-paced and controlled to avoid over-dosing. Jar testing with various chemicals is recommended to determine the most effective chemical as well as the optimum dosage.

Equipment

- Aqua-Aerobic Systems, Inc. is familiar with various “Buy American” Acts (i.e. AIS, ARRA, Federal FAR 52.225, EXIM Bank, USAid, PA Steel Products Act, etc.). As the project develops Aqua-Aerobic Systems can work with you to ensure full compliance of our goods with various Buy American provisions if they are applicable/required for the project. When applicable, please provide us with the specifics of the project’s “Buy American” provisions.

AquaDISK Tertiary Filtration - Design Summary

DESIGN INFLUENT CONDITIONS

Pre-Filter Treatment:	Physical/Chemical		
Avg. Design Flow	= 4 MGD	= 2777.78 gpm	= 15142 m³/day
Max Design Flow	= 8 MGD	= 5555.6 gpm	= 30283 m³/day

DESIGN PARAMETERS	Influent	mg/l	Effluent Required	<= mg/l	Effluent Anticipated	<= mg/l
Avg. Total Suspended Solids:	TSSa	15	TSSa	5	TSSa	5
Max. Total Suspended Solids:	TSSm	20	--	--	--	--

AquaDISK FILTER RECOMMENDATION

Qty Of Filter Units Recommended	= 2
Number Of Disks Per Unit	= 8
Total Number Of Disks Recommended	= 16
Total Filter Area Provided	= 860.8 ft² = (79.97 m²)
Filter Model Recommended	= AquaDisk Package: Model ADFSP-54 x 8E-PC
Filter Media Cloth Type	= OptiFiber PES-14

AquaDISK FILTER CALCULATIONS

Filter Type:

Vertically Mounted Cloth Media Disks featuring automatically operated vacuum backwash . Tank shall include a rounded bottom and solids removal system.

Average Flow Conditions:

Average Hydraulic Loading
= Avg. Design Flow (gpm) / Recommended Filter Area (ft²)
= 2777.8 / 860.8 ft²
= 3.23 gpm/ft² (7.89 m/hr) at Avg. Flow

Maximum Flow Conditions:

Maximum Hydraulic Loading
= Max. Design Flow (gpm) / Recommended Filter Area (ft²)
= 5555.6 / 860.8 ft²
= 6.45 gpm/ft² (15.78 m/hr) at Max. Flow

Solids Loading:

Solids Loading Rate
= (lbs TSS/day at max flow and max TSS loading) / Recommended Filter Area (ft²)
= 1334.4 lbs/day / 860.8 ft²
= 1.55 lbs. TSS /day/ft² (7.56 kg. TSS/day/m²)

The above recommendation is based upon the provision to maintain a satisfactory hydraulic surface loading at 50% of the Maximum Design Flow with (1) unit out of service. The resultant hydraulic loading rate at 50% of the Maximum Design Flow is: 6.5 gpm / ft² = (4.4 L/s / m²)

Redacted per Florida Statute 119.071 (3)b1

Page 116

LAKE MONROE - DELTONA RWW

Redacted per Florida Statute 119.071 (3)b1
Page 117

LAKE MONROE-DELTONA RWW
AQUA-AEROBIC SYSTEMS, INC
UPDATED MODEL

Redacted per Florida Statute 119.071 (3)b1
Page 118
LAKE MONROE-DELTONA RWW
AQUA-AEROBIC SYSTEMS, INC
UPDATED MODEL
AQUADISK FILTER MODEL ADFSP-54 X BE-PC

Redacted per Florida Statute 119.071 (3)b1

Page 119

LAKE MONROE-DELTONA RWW

AQUA-AEROBIC SYSTEMS, INC

UPDATED MODEL

AQUADISK FILTER MODEL ADFSP-54 X BE-PC

Redacted per Florida Statute 119.071 (3)b1

Page 120

LAKE MONROE-DELTONA RWW

AQUA-AEROBIC SYSTEMS, INC

UPDATED MODEL

AQUADISK FILTER MODEL ADFSP-54 X BE-PC

AQUA-AEROBIC SYSTEMS, INC.
SPECIFICATION FOR AQUADISK® TERTIARY PACKAGE FILTER
PILE CLOTH
For
Lake Monroe-Deltona RWW FL
Project ID#112282A / Design #143132
Date: February 9, 2016

AQUADISK TERTIARY FILTER

There shall be two Model ADFSP-54 x 8E-PC AquaDisk filters as manufactured by Aqua-Aerobic Systems, Inc., of Loves Park, Illinois. Filter shall be factory tested and ready for operation. Contractor shall furnish all labor, materials, equipment and incidentals required for installation of the AquaDisk as shown on the drawings and as specified herein.

Each unit will include:
Tank Assembly
Sun Cover
Drive Assembly
Centertube Assembly with Cloth Media Disks
Backwash System
Backwash/Waste Pump Assembly
Valves
Pressure Transmitter
Float Switch
Vacuum Transmitter
Electrical Controls with Internal Components

Each filter unit will be shipped fully assembled and wired from the factory, unless noted otherwise herein. All motors, pumps, and bearings shall be designed for continuous duty and long operating life in a high humidity atmosphere. All motors and pumps shall be 460 volt, 60 hertz, 3 phase.

SPECIFICATION PRECEDENCE

The specifications for equipment and controls under this section supersede specifications for equipment and controls specified elsewhere in the contract documents and drawings. Purchased components such as gear reducers, pumps, motors, valves, and actuators shall be provided with standard recommended manufacturers paint, unless otherwise specified within this section.

SERVICE

The equipment manufacturer shall furnish the services of a factory trained representative for a maximum of 1 trip and 4 eight hour days at the jobsite to inspect the installing contractor's equipment installation, supervise the initial operation of the equipment, instruct the plant operating personnel in proper operation and maintenance, and provide process assistance.

If additional service is required due to the mechanisms not being fully operational, at the time of service requested by the contractor, the additional service days will be at the contractor's expense.

WARRANTY

The Manufacturer shall provide a written warranty against defects in materials and workmanship. Manufacturer shall warrant the goods provided by the Manufacturer to be free from defects in materials

and workmanship under normal conditions and use for a period of one (1) year from the date the goods are put into service, or eighteen (18) months from shipment of equipment, whichever first shall occur. This warranty shall not apply to any goods or parts which have been altered, applied, operated or installed contrary to the Manufacturer's instructions or subject to misuse, chemical attack/degradation, negligence or accident.

MANUFACTURING QUALIFICATIONS

The filter supplier shall have experience in the design and manufacture of cloth media filters for a minimum of ten (10) years and shall be able to demonstrate a minimum of fifty (50) installations within the United States in municipal wastewater applications with cloth media.

PERFORMANCE AND DESIGN PARAMETERS

The AquaDisk filter shall be capable of filtering effluent from a Lined Reservoir followed by Chemical Addition and a Floc Tank. Design shall be for:

4 MGD Average Daily Flow
8 MGD Maximum Daily Flow

Filter influent total suspended solids (TSS) concentration shall be 15 mg/l daily average and 20 mg/l maximum at average daily flow rate.

Filter effluent total suspended solids concentration shall not be greater than 5 mg/l based on a monthly average.

FILTER DISK TANK

Each tank assembly shall be painted steel. Entire tank construction shall have a minimum thickness of 10 gauge. Each tank shall have a rounded bottom to ensure deposition of solids does not occur in the corners of the tank. Due to concerns with solids deposit, tanks without rounded bottoms shall not be accepted. Each tank shall be provided with an integral solids waste collection manifold. Waste manifolds that are not integral to the tank shall not be accepted. Each tank drain shall be provided with a manually operated brass ball valve. Valve shall be provided loose for installation by the installing contractor. The tank shall be finished with Interior: Near white sandblast (SSPC-SP10), painted with Tnemec N69 polyamide epoxy (color “safety blue”) 2 coats 4-6 mils each for 8-12 mils DFT. Exterior: Commercial sandblast (SSPC-SP6), painted Tnemec N69 Hi-Build Epoxoline II (color “safety blue”) 2 coats 3-4 mils each, 1 coat Tnemec 1075 Endura shield II, 2-3 mils for 8-11 mils DFT.

DRIVE ASSEMBLY

Each filter shall include an adjustable drive assembly with a gearbox, nylon drive sprocket, acetal drive chain with 304 stainless steel link pins, and a 304 stainless steel chain guard. The gearbox shall be parallel in-line helical type, AGMA Class 1 with a 3/4 HP drive motor rated for 460 volt, 3 phase, 60 Hz. Gear reducer shall be Nord or approved equal. Drive motor shall be Nord, Weg, Baldor, or approved equal.

To reduce energy demand, the drive assembly shall rotate the disks only during backwash. Systems requiring constantly rotating disks during filtration will not be acceptable. Belt drive systems or systems with multiple drive units per filter will not be acceptable.

If motors and gearboxes require routine maintenance, and are not accessible from the outside tank side walls, the equipment manufacturer shall provide an internal access platform between the tank side walls and motors and gearboxes.

CENTERTUBE ASSEMBLY

Each centertube assembly shall include a minimum 3/16", 304 stainless steel centertube weldment, driven sprocket, wheel assemblies, 304 stainless steel disk segment rods, and frame and cloth assemblies. Each centertube assembly shall also include a Viton v-ring effluent port seal which provides superior chlorine resistance. Materials other than Viton are not acceptable for seal materials. The driven sprocket shall be multi segment made of UHMW polyethylene. All fasteners shall be stainless steel.

FILTER CLOTH ASSEMBLIES

Each basin shall include eight cloth disk assemblies. Each filter unit shall have a total of 430.4 square feet of minimum effective submerged filtration area.

Cloths shall be of microfiber pile construction having a nominal filtration rating of 5 microns. Granular media and screens having structured identical openings shall not be allowed. The pile cloth shall be free chlorine resistant cloth. Pile cloth media with nylon material of construction is not free chlorine resistant and shall not be acceptable. The cloth media shall have an active filter depth of 3 to 5 mm to provide additional collisions between solids particles and the media within the media depth, resulting in capture of solids across a broader particle range. The cloth depth shall also provide storage of captured solids, reducing backwash volumes while maintaining an operational headloss. Woven mesh or microscreen type media with no filtration depth are not acceptable.

Each cloth disk assembly shall be comprised of six (6) individual segments, each consisting of a cloth media sock supported by an injection molded polypropylene co-polymer frame with corrosion resistant assembly hardware. Cloth/frame assemblies shall be constructed such that each segment is easily removable from the centertube, without special tools, to allow for removal and replacement of the cloth at the point of installation. Systems requiring special tools and/or the return of media segments to the factory for replacement will not be considered.

If the wet weight of the filter disk segment is greater than 50 pounds, a lifting mechanism shall be provided.

Each cloth disk assembly shall have a minimum of 53.8 square feet of effective submerged filtration area. Effective submerged filtration area is defined as only the portion of the disk that is submerged during filtration. Any disk area that is not submerged shall not be considered as effective area. Each disk shall be divided into no more than six (6) segments and shall be easily removable for service.

During filtration, the filter unit shall operate in a static condition with no moving parts. The filter system shall provide for the collection of filtered solids on the outside of the cloth media surface to allow for the direct contact of cleaning systems. Filtered effluent shall be used for backwashing. The filter flow path shall be from the outside of the cloth frame to the inside. Systems with flow paths from the inside to the outside of the cloth frame that collect filtered solids and plastic debris on the interior surfaces of the cloth frame will not be acceptable.

Only media area below the effluent weir elevation will be considered in the filtration area calculation since this is the only area that is submerged and available for filtration 100% of the time.

Submittal information shall include calculations that verify the effective filtration surface area. Media surface fused directly to support structure such that water cannot pass through the media shall not be included in these calculations

The operator shall be able to bring a drained filter on line by simply opening the influent isolation device. If the filter design is such that it must be filled with water before the influent isolation device is opened to prevent damage to the filter media, an automated process that sequentially brings the filter back on line with a single switch shall be provided to prevent accidental media damage. The automated process shall activate a minimum 6" diameter motorized valve to fill the filter with effluent or other clean water source in not more than five minutes, verify that the filter is full, and open the motorized influent isolation device.

Because of the frequency of the backwash and misting associated with spray systems, designs that utilize high pressure spray or a moving vacuum head as the sole means of solids removal will not be acceptable.

Submittals shall include a hydraulic profile through the filter showing the following:

- Influent weir length
- Influent weir elevation
- Influent weir nappe at design and peak flow
- Effluent weir length
- Effluent weir elevation
- Effluent weir nappe at design and peak flow

BACKWASH SYSTEM

The backwash function shall incorporate a pump that draws filter effluent through the cloth as the media rotates past the fixed backwash shoe, thereby removing accumulated solids from the cloth surface. Each disk shall be cleaned by a minimum of two backwash shoes, one on each side. The backwash shoes shall remain in a fixed position. Springs shall be used to maintain the proper tensioning of the backwash shoe against the media surface.

The backwash shoe shall be in direct contact with the cloth to ensure effective media cleaning. Systems utilizing media cleaning mechanisms that do not contact the filter media will not be acceptable.
Neither the cloth / support assemblies nor the backwash shoes shall include any gridwork overlays or other interferences that would prevent direct contact of the backwash shoes with the cloth fibers.

The backwash system shall include 304 stainless steel backwash shoe supports with UHMW backwash shoes, 316 stainless steel springs reinforced PVC flexible hose with stainless steel hose clamps, 304 stainless steel backwash manifolds.

BACKWASH/WASTE PUMP ASSEMBLY

Each backwash/waste pump assembly shall include two backwash/waste pumps, valves and gauges. In the external piping shall be backwash and solids waste valves, recirculation ball valves, 3" manually operated flow control gate valve for each pump, vacuum gauge, and pressure gauge.

The backwash/waste pumps shall be shipped loose for field installation by the installing contractor. Backwash piping between the filter tank and pump as well as piping following the pump shall be supplied by the installing contractor. Installing contractor shall supply unions or flanges for service, wiring, and factory installed conduit shall be provided within 3 feet of the pump.

The backwash/waste pumps shall be Gorman Rupp model 12B20-B, externally mounted centrifugal pump. Pump shall be provided with a 2 HP, 460 volt, 3 phase, 60 Hz motor and operate at 1750 RPM.

Pumps shall each be rated for 130 gpm at 23 ft TDH. Motor shall be Baldor, Teco, Weg or approved equal. Backwashing shall be initiated by tank water level, timer, or manually through the operator interface. Operator shall have the ability to specify backwash time interval elapses through the operator interface. The backwash water shall be pressurized by the filter's backwash/waste pump for discharging from the filter system. Systems utilizing non-pressurized backwash flow will not be accepted.

Pump manually operated threaded gate valve shall be class 125 bronze with screw in bonnet, non-rising stem, and solid wedge. Valve shall conform to MSS SP-80 and shall be Nibco or approved equal.

The 3 inch threaded ball valves shall be a two-piece, full port, with a brass body. Valves and shall be Nibco or approved equal.

The vacuum gauge shall have a minimum 2.5" dial with all stainless steel welded construction, 0-30" Hg vacuum range, liquid filled, ¼" NPT process connection, 316 stainless steel bourdon tube and tip material, and bronze socket material, Ashcroft or approved equal.

The pressure gauge shall have a 2.5" dial with a black painted steel case, 0-15 psi, heat resistant polycarbonate window, ¼" NPT process connection, "C" shaped bronze bourdon tube, and brass socket material, Ashcroft or approved equal.

Filtering shall not be interrupted during normal backwashing and solids waste discharge.

VALVES

Each filter shall include four 2" backwash valves. Valves shall be 3 piece, grooved end, ASTM A351 Grade CF8M stainless steel body, 316 stainless steel ball and stem, fullport, installed with painted cast iron Victaulic couplings, with a 115 volt, single phase, 60 Hz, open / close service electric actuator. Valve / actuator combination shall be TCI / RCI (RCI, a division of Rotork), Nibco, or equal. Valve actuator shall include a compartment heater and limit switch feedback to the microprocessor in both the open and closed positions. Because of fouling that can be caused by stringy material, non full port valves such as butterfly valves or plastic valves shall not be acceptable.

Each filter shall include one 2" solids waste valve. Valve shall be 3 piece, grooved end, ASTM A351 Grade CF8M stainless steel body, 316 stainless steel ball and stem, fullport, "installed with" painted cast iron Victaulic couplings, with a 115 volt, single phase, 60 Hz, open / close service electric actuator. Valve / actuator combination shall be TCI / RCI (RCI, a division of Rotork), Nibco, or equal. Valve actuator shall include a compartment heater and limit switch feedback to the microprocessor in both the open and closed positions.

Each filter shall include a solids waste removal system in the floor of the filter tank. The manifold shall be designed to siphon settled solids waste for discharge through the backwash/waste pump. The operation of the solids waste removal system shall be automatic with user adjustable intervals and duration through the operator interface. Filters that are designed without a solids waste removal system will not be acceptable.

INDIVIDUAL FILTER ISOLATION

Each filter shall include isolation upstream provided by the installing contractor.

PRESSURE TRANSMITTER

The pressure transmitter shall have stainless steel wetted parts and provide a 4-20 mA signal over a range of 0" to 100" H2O. Unit shall monitor the water level of each filter tank. Transmitter shall be flush mounted to the tank wall. Transmitter shall be an IFM Effector PX series or approved equal.

FLOAT SWITCH

A float switch shall be furnished to indicate emerging overflow level. The float switch shall be Anchor Scientific Model GSI 40NONC-STO or approved equal. The float shall contain a non-mercury switch, chemical resistant polypropylene casing hermetically sealed and a PVC #18 AWG three conductor cable. Switch rating shall be minimum 4.5 amps non-inductive at 120 VAC.

VACUUM TRANSMITTER

The vacuum transmitter shall have stainless steel wetted parts and provide a 4-20 mA signal over a range of 0 to 30 inHG. Transmitter shall be an IFM Effector PX series or approved equal.

MISC/SPARE PARTS

(2) Frame and cloth assemblies.
(1) Backwash/solids waste valve and actuator.
(1) Viton V-ring effluent port/centertube seal.

CONTROL SYSTEM

The automatic and manual controls for operation of the Aqua Disk® Filter system shall be furnished fully assembled, wired and pre-programmed in a UL 508A Certified Industrial Control Panel. Controls shall be provided to control or monitor equipment as described in the contract drawings. The control system shall include the following control components and practices:

CONTROL PANEL WIRING AND ASSEMBLY

All control enclosures shall be custom assembled and wired in an Underwriters Laboratories (UL) certified cabinet shop using quality materials and labor. Short circuit rating of control enclosure shall be 5 kA RMS symmetrical @ 480VAC maximum.

All control panel single conductor wire shall be 16 AWG multi-strand machine tool wire (MTW) minimum, with PVC insulation.

Wire colors are as follows:

208 VAC or higher	-	Black
120 VAC control power	-	Red
Neutral	-	White
Ground	-	Green
AC Power from remote source	-	Yellow
Neutral from remote source	-	White with Yellow Stripe
24 VDC (+)	-	Blue
24 VDC (-)	-	White with Blue Stripe
VDC (+) from remote source	-	Orange
VDC (-) from remote source	-	White with Orange Stripe
Intrinsically Safe	-	Light Blue

All wires shall be clearly marked with an identification number consistent with the wiring schematic drawing. Wire markers shall be a thermal transfer printable type. The material shall be a self-laminating vinyl. Labels shall be Brady THT-9-427-10 or approved equal.

Wiring inside the control panel shall be run in PVC wiring duct rated for continuous temperatures up to 122° F (50°C). Devices mounted in the enclosure door shall have wires run in spiral wrap to avoid pinch points when opening and closing the door.

Control components mounted internal and external to the enclosure shall be mounted with stainless steel hardware and clearly labeled with a plastic identification nametag. The tag shall be white with black lettering.

CONTROL PANEL QUALITY ASSURANCE

All Control panels shall be UL certified. Testing by manufacturer's electrical engineering prior to releasing for shipment shall be completed. Testing shall consist of the following:

Point to point testing of all wiring prior to application of power
Intended supply voltage shall be applied to the enclosure
All components shall be tested for proper operation and calibration
The PLC and operator interface program shall be loaded and functionally checked
All components shall be checked to confirm proper mounting specifications have been followed
Enclosure shall be inspected for defects and repaired if necessary
All labeling of wires and devices are correct, properly installed and clean

The manufacturer shall finalize the factory checkout by completing a control panel checklist to document all testing completed above.

Upon the successful completion of the control testing of the enclosure assembly, all applicable documentation (i.e. finalized drawing set, signed control checklist cover page, device data sheets, etc.) shall be placed in the drawing pocket of the enclosure.

ALUMINUM CONDUIT

All wiring of pre-assembled and mounted external electrical components to control panels or junction boxes on the tank shall be aluminum metallic construction. Conduit shall be sized for adequate spare capacity. The aluminum conduit system shall be manufactured in accordance with UL6A and ANSIC80.5. All conduits shall be supported at maximum 3 foot intervals with support straps designed especially for installation of conduit. The clamp system shall allow the conduit to expand and contract freely, eliminating bowing caused by varying temperature changes. The aluminum conduit bodies shall be manufactured in accordance with UL514A, and Federal Military Specification WWC-586B. Conduit body hubs shall be threaded. Materials shall be copper free aluminum (max. 4/10 of 1% copper content), lightweight, shall be high corrosion resistance, be self-oxidizing, and self-renewing. Blank covers shall be domed for extra wiring space and shall be supplied complete with a neoprene or composition fiber gasket.

CONTROL ENCLOSURE

The automatic controls shall be provided in a UL listed, NEMA Type 4X 304 stainless steel (14 gauge) wall mounted enclosure that provides insulation and protection for electrical controls and components from highly corrosive environments indoors and outdoors. Enclosure shall include a seamless foam-in-place gasket to assure watertight and dust-tight seal. An internal 3-point latch and 316SS padlocking POWERGLIDE® handle shall be provided. Enclosures shall be painted white. Enclosure shall include a painted white mild steel (12 gauge) sub-panel mounted with collar studs. Enclosure shall be manufactured by Hoffman or approved equal.

ENCLOSURE SUN SHIELD
A 304 10 gauge stainless steel sun shield shall be included. A sunshield shall over hang the front of the panel a minimum of 10".

The control enclosure shall be mounted to the filter unit.

CORROSION INHIBITOR
Each control enclosure assembly shall be provided with corrosion inhibitors to protect interior electrical components from damage caused by high humidity. The corrosion inhibitors shall be installed prior to shipment to provide protection during shipment and storage of the enclosure. The corrosion inhibitor shall be Hoffman AHCI5E or approved equal.

AIR CONDITIONER
A thermostat controlled air conditioner with noise suppression shall be supplied to protect control components mounted inside the enclosure from high temperatures, humidity and ambient air contaminants. The air conditioner shall be constructed of brushed finish stainless steel 304 material and provide NEMA 4X Type protection from outdoor and hose-down applications. The air conditioner unit shall use CFC-free or environmentally safe refrigerant that is universally accepted. The air conditioner shall be manufactured by Hoffman or approved equal.

ELECTRIC HEATER
An electric heater shall be provided inside the control enclosure to protect sensitive mechanical and electrical components from the harmful effects of condensation, corrosion and low temperatures. The heater is a thermostatically controlled, fan-driven unit. The heater shall be manufactured by Hoffman or approved equal.

COLD WEATHER CLIMATE
Temperature sensor shall be mounted in the control panel for each basin. The sensor shall sense the temperature outside the control panel and shall cycle the backwash pump(s) periodically during freezing conditions. Temperature sensor shall be IFM Efector TA3333 or approved equal.

MAIN DISCONNECT CIRCUIT BREAKER
A UL listed, automatic molded case 3-pole disconnect breaker shall be provided in the control enclosure(s). The primary function of the disconnect switch shall be to provide a means to manually open a circuit and automatically open a circuit under overload or short circuit conditions. The disconnect breaker shall have a door mounted operating mechanism with trip indication. Power distribution connectors shall be mounted integrally to the circuit breaker for multiple load connections. Integral connectors shall be provided. The disconnect circuit breaker shall be a Square D/FAL, HDL, JDL, LAL, MGL, PGL or approved equal.

MOTOR STARTER
A full voltage non-reversing Integrated Motor Starter-Controller shall be provided for motor applications up to 15 kW. Each starter shall provide control, protection and monitoring functions for the motor. The starter shall be IEC rated and shall have certifications according to UL and CSA standards and shall bear the CE marking. The starter shall have a maximum rated operational voltage of 690V and provide a 42kA @ 480 VAC rated breaking capacity on short circuit. The starter shall have a mechanical durability of 15 million operations. The starter shall provide short circuit trip, thermal overload trip with selectable tripping class, under current trip and phase imbalance trip.

TRANSFORMER

A step-down multi-tap transformer shall be supplied when there is a necessity to reduce incoming 3-phase power to 120 VAC single-phase. The transformer power wire connections (incoming and outgoing) shall be protected with a finger-safe cover to protect against accidental contact. Primary and secondary fuse protection shall be provided. Transformer shall be UL listed and of continuous wound construction with vacuum impregnated with non-hygroscopic thermosetting varnish. Transformer shall be Square D 9070T or approved equal.

TRANSFORMER PRIMARY AND SECONDARY FUSE

Properly rated fuses and fuse blocks shall be provided for primary and secondary protection of the transformer. Each fuse shall be equipped with a thermoplastic cover to protect against accidental contact. Clip style fuse block shall be rated up to 600 VAC and 100 amps, dual element, time delay fuses shall be rated up to 600 VAC. Fuse blocks and fuses shall be UL listed. Fuses shall be Littelfuse Class CC or approved equal. Fuse blocks and fuse covers shall be manufactured by Marathon or approved equal.

CIRCUIT BREAKER

All single phase branch or supplementary circuits shall be protected with a single-pole, C-Curve rated circuit breaker. Circuit breakers shall be rated for 240 VAC maximum, 50/60 Hz and UL 489 listed. Supplementary and branch protection circuit breakers shall be Merlin Gerin Multi 9 or approved equal.

FUSE

Properly rated fuses and fuse holders shall be provided for protection of individual control devices (discrete and analog signals) mounted outside of the enclosure. Each fuse shall be housed in a hinged type fuse block to protect against contact with the fuse. Fuses shall be rated up to 250 VAC and be Littelfuse or approved equal. Fuse holders for discrete devices shall be rated to 600 VAC and 30 Amps. Fuse holders for analog devices shall be rated to 300 VAC and 15 Amps. Fuse holders shall be Allen Bradley 1492 or approved equal.

OPERATOR DEVICE

Operator devices (pushbuttons and selector switches) shall be mounted through the control enclosure door for manual operation of the filter. Transformer type push-to-test pilot lights and illuminated pushbuttons shall be provided for indication of an operation status. Lights shall be a 6 VAC incandescent type lamp. Color coding shall be applied as required and is as follows:

Amber – Alarm active, caution
Green – Valve open, motor running
Red – Valve closed
White - Information

All operator devices shall be UL Listed, 30.5mm style, NEMA Type 4X rated, oil and water tight with finger safe guards located on the contact blocks to prevent accidental contact with wire connections. Operator device function shall be identified with an engraved white Gravoply nameplate with black letters. Operator devices shall be Allen-Bradley 800H, Square D 9001, or approved equal.

HIGH FREQUENCY NOISE FILTER

A UL listed active tracking filter shall be provided to protect the PLC and HMI power feeds from high-frequency noise and low-energy transients. It shall be designed for a single phase input voltage of 120/240VAC operating at 47 to 63 Hz. The unit shall reduce normal mode transients to plus or minus 2

volts, provide surge capacity of 45,000 amps and protect in all modes (Line to neutral, line to ground and neutral to ground). The noise filter shall be an Islatrol IC+ or approved equal.

UNINTERRUPTIBLE POWER SUPPLY

A UL listed uninterruptible power supply suitable for location in a UL 508 panel shall be provided to protect the HMI and PLC from short power outages by switching to an emergency battery backup without data loss or downtime. Nominal input voltage and output voltage shall be 120VAC with an autosensing input frequency of 47 to 63 Hz. The output power capacity shall be 650W / 1000VA. The UPS shall be provided with an audible alarm and LED status indicators and operate from 32° to 122°F (0° to 50°C). The UPS shall be an Allen Bradley 1609-B1000N.

GROUND FAULT DUPLEX RECEPTACLE

A UL listed ground fault circuit interrupter (GFCI) duplex receptacle shall be provided within the panel for instrument (e.g. programming terminal, modem, etc.) use only. The receptacle shall be protected with a 5 Amp circuit breaker. The receptacle shall carry a 20A / 120VAC rating. The electro-mechanical circuit interrupter shall be double-pole and trip free (GFCI protection and shall not be overridden by holding reset button). Built-in transient suppression shall protect GFCI's internal circuitry from voltage transients. Receptacle shall be Hubbell DRUBGFI20 or approved equal.

24 VOLT DC POWER SUPPLY

A UL listed, industrial grade, compact power supply shall be supplied to provide 24 VDC power to such rated components. The power supply shall be DIN rail mounted and functional with input voltage of 100 to 240 VAC (single-phase) incoming control power. The power supply shall have a green LED which shall be illuminated when output voltage is "OK". The power supply shall be an Allen Bradley 1606 or approved equal.

CONTROL RELAY

UL listed control relays for general control purposes shall be supplied with a pilot light to indicate when the coil is in an energized state. The relay socket shall be panel or DIN rail mounted inside the enclosure. The relays shall provide the following ratings: 120VAC coil, 10A contact rating (thermal), 250 VAC insulation rating and 5 million mechanical life cycles. Relays shall be Allen Bradley 700-HK, Square D, or approved equal.

TERMINAL BLOCK

Standard feed-through screw terminal blocks, DIN rail mounted, shall be supplied for all point to point wiring connections. All terminals shall be numbered per the wiring schematic with printed markers. Terminals shall carry a 600V AC/DC voltage rating. Terminal blocks shall be Allen-Bradley 1492-J4 (35A max) and 1492-J16 (85A max) or approved equal.

PROGRAMMABLE LOGIC CONTROLLER

Automatic operation of the Filter shall be controlled through a Allen Bradley MicroLogix 1400 programmable logic controller (PLC) mounted inside the main control panel. The PLC components shall consist of a base unit, expansion I/O modules, and memory module. All input and output points supplied (including unused) shall be wired to terminal blocks. The PLC user memory shall consist of a minimum of 20K words of program and data. All PLC hardware shall be UL listed and operate at an ambient temperature of -4° to 140° F (-20° to 60° C).

BASE UNIT

The base unit shall house embedded inputs, outputs, power supply, and communication (Ethernet, RS-232, RS-485) ports. The base unit shall also provide the interface to expansion I/O when required by an application.

The power supply input range shall be 100 to 240V AC at 47 to 63 Hz with a maximum power consumption of 100 VA.

The embedded discrete inputs shall be rated for 120V AC and the discrete (relay) outputs shall be rated for 265V AC/125V DC. Embedded analog I/O shall be voltage (±10 V) inputs and outputs. Each I/O point shall have LED status indication.

The base unit shall have one (1) RS-232-C serial port, one (1) RS-485 serial port, and one (1) RJ-45 port which supports 10/100 Mbps EtherNet/IP. These ports shall be capable of local and remote programming, troubleshooting, and data manipulation.

The PLC base unit shall be an Allen Bradley 1766-L32AWAA or approved equal.

DIGITAL EXPANSION INPUT MODULE

The expansion digital input module shall have an operating voltage of 79 to 132V AC at 47 to 63 Hz. The module shall have an LED status indication of each point. The digital expansion input module shall be an Allen Bradley 1762-IA8 or approved equal.

MEMORY MODULE

The controller shall be shipped with a memory module for user program and data backup. The memory module shall be an Allen Bradley 1766-MM1 or approved equal.

ETHERNET SWITCH

An Ethernet switch shall be provided inside the control enclosure to provide connectivity between the PLC, operator interface and plant networking. The switch shall support both 10 and 100 Mbit/s operation and provide for store and forward switching mode. The switch shall have five (5) 10/100Base-T ports with RJ-45 sockets and shall support auto-crossing, auto-negotiation and auto-polarity. Maximum distance between devices shall be 100m.

The unit shall be DIN rail mounted and require 24VDC/100mA power. Diagnostic LEDs for power, link status, data, and data rate shall be provided. The Ethernet switch shall be UL listed and manufactured by Hirschmann/Spider 5TX, or approved equal.

HUMAN MACHINE INTERFACE OVERVIEW

The control system shall be equipped with a UL listed operator interface that provides control display screens. These screens shall be used by the operator to monitor and control filter status, setpoint and alarm information.

The Interface shall allow the Operator access to adjust the following operating parameters:

- Backwash interval, Backwash duration, Solids Waste interval, Solids Waste duration, Number of Backwashes between Solids Waste interval.

The operator interface shall provide information to assist the Operator in assessing the status of the filter system. The interface screen shall display, at minimum, the following parameters:

- Water level in the filter, Time since last Backwash, Time since last Solids Waste withdrawal, Elapsed time on the Drive Motor, Elapsed time on the Backwash/Waste Pump(s), Total Backwash time and cycles, Total Solids Waste withdrawal time and cycles.

The operator interface shall allow the Operator to:

- Initiate Backwash
- Control all electric actuated valves

The interface shall display the alarm history. The alarm history shall include the time and date of the most recent 25 alarms along with the description of the alarm.

The interface shall also display current alarms, including the date, time and a description of the alarm.

As a diagnostic aid to the Operator, the interface shall display the time between Backwashes for the most recent 40 Backwashes.

HUMAN MACHINE INTERFACE

The operator interface shall be a NEMA Type 12, 13, 4X rated, 6.5" diagonal, color touchscreen display with Ethernet and serial communications. The interface shall be a liquid crystal display (LCD). The display type shall be color active matrix thin-film transistor (TFT) with 640 x 480 pixel resolution. The rated operating temperature shall be 32° to 131° F (0° to 55° C). The operator interface shall be an Allen Bradley PanelView Plus 6 700.

HUMAN MACHINE INTERFACE SUN SHIELD

A sun shield constructed of 304 stainless steel shall be mounted over the operator interface to provide protection and visibility of operator screens in outdoor applications.

AQUA-AEROBIC SYSTEMS, INC.
Partnering for Solutions

AquaDisk® Cloth Media Filter
Operational Description

The AquaDisk® Cloth Media Filter is a complete system for continuously removing particulates from a flow stream. The system's operational strategy consists of three modes: Filtration, Backwash, and Solids Wasting. A programmable logic controller (PLC) based control system provides for automatic operation of all process modes.

Filtration Mode

The influent pipe (1) routes flow to the filter basin (2), where filtration occurs. The filter basin contains a series of circular disks covered with a unique pile cloth media. As water passes through the media via an outside-in flow path, some particulates are removed and stored within the pile cloth media while others are deposited on the pile cloth media surface. Filtered water, or filtrate, is collected in a centertube (3) and flows, via gravity, over the effluent weir and into the effluent chamber (4) prior to discharge. It is important to note that during filtration, the disks do not rotate.

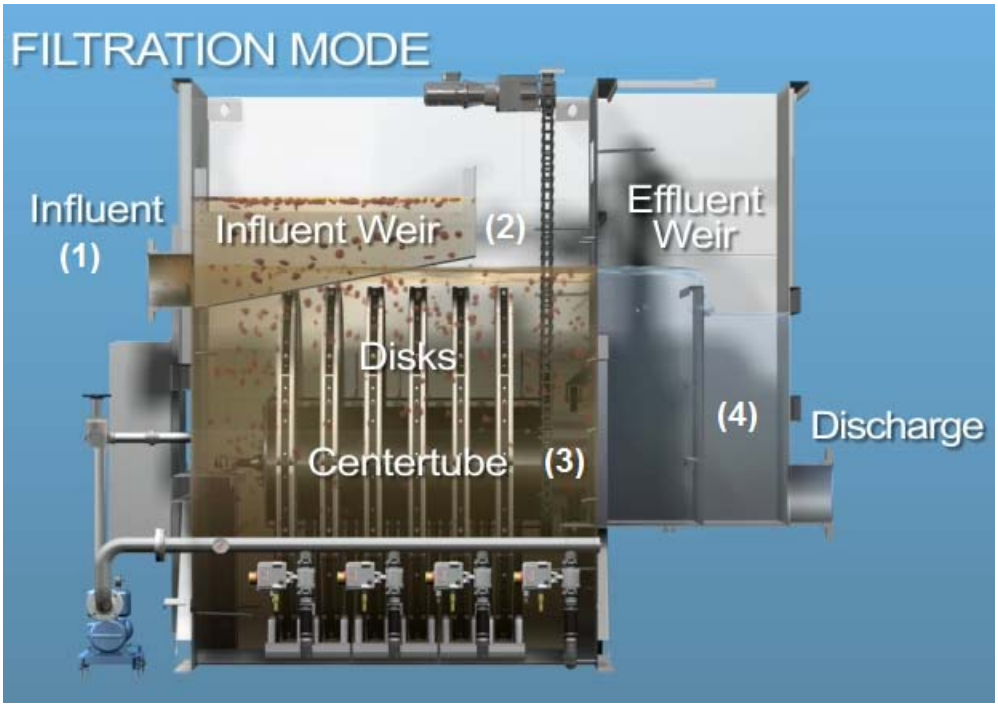

Normal Operation

Copyright 2015 Aqua-Aerobic Systems, Inc.

6306 N. Alpine Rd. Loves Park, IL 61111-7655 p 815.654.2501 f 815.654.2508 www.aqua-aerobic.com

As more particulates are deposited on and within the pile cloth media, the pressure required to drive water through the pile cloth media (headloss) increases. This results in a rise in the water level within the filter basin and increased differential pressure on the pile cloth media. Upon reaching a specific basin water level set point, the PLC automatically initiates the backwash mode to clean the pile cloth media.

Copyright 2015 Aqua-Aerobic Systems, Inc.

6306 N. Alpine Rd. Loves Park, IL 61111-7655 p 815.654.2501 f 815.654.2508 www.aqua-aerobic.com

Backwash Mode

As the amount of particulates on and within the pile cloth media increases, the static pressure required to pass water through the pile cloth media increases. This results in an increased water level within the filter basin and increased differential pressure on the pile cloth media. Upon reaching a specific basin level or elapsed time period, the backwash mode will be automatically initiated to clean the pile cloth media.

Solids are backwashed from the pile cloth media surface by liquid suction through backwash shoes (5) positioned on both sides of each disk. These spring loaded backwash shoes contact the pile cloth media to provide the necessary suction for optimum cleaning efficiency. During backwash, disks are cleaned in multiples of two, unless the filter has only one disk. The disks rotate slowly while a backwash/waste pump (not shown) draws filtered water from the centertube through the pile cloth media on an inside-to-outside, or reversed, flow path. This provides effective cleaning of the pile cloth media over the entire disk. By the end of the backwash cycle, the basin water level returns to its normal operating level. Backwash water is typically directed to the headworks.

Filtration continues while the filter is in backwash mode. This feature allows continuous filtration while maintaining efficient filter performance.

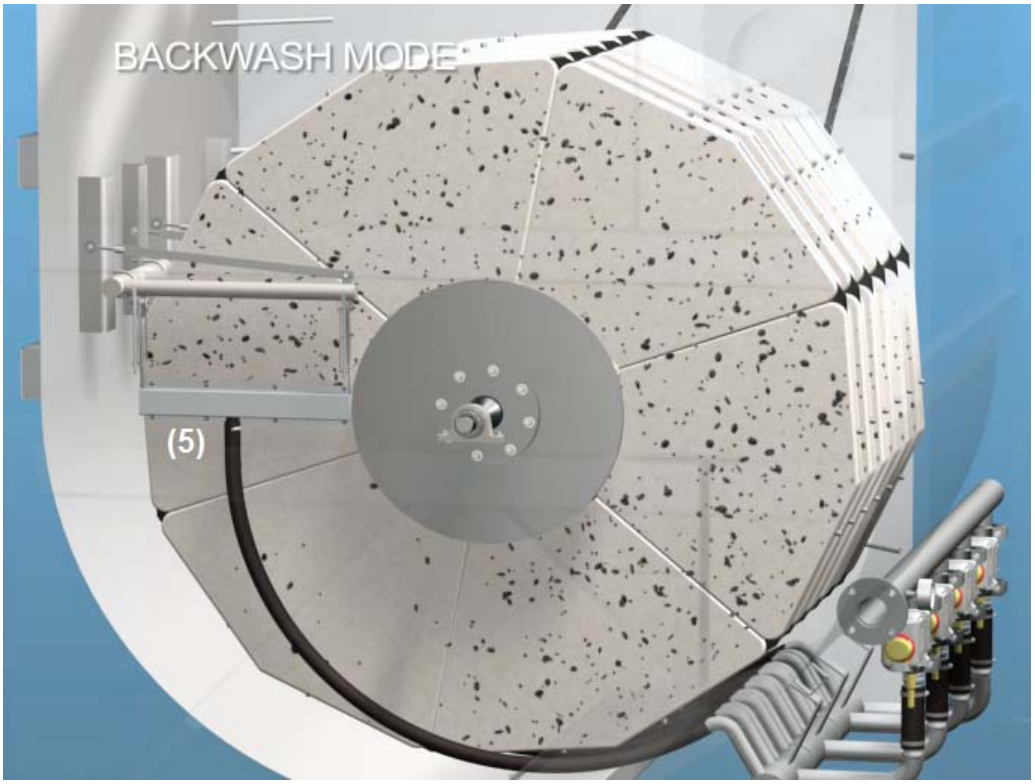

Backwash Shoes Clean Media

Copyright 2015 Aqua-Aerobic Systems, Inc.

6306 N. Alpine Rd. Loves Park, IL 61111-7655 p 815.654.2501 f 815.654.2508 www.aqua-aerobic.com

Solids Wasting Mode

A quiescent environment during filtration, combined with the outside-in filtration flow path, allows heavier particulates to settle to the bottom of the filter basin. Upon reaching a specific number of backwash cycles performed, or an elapsed time, the solids waste mode will be automatically initiated. The solids waste mode utilizes the backwash/waste pump to provide suction of the settled solids through a perforated solids collection manifold (6). Since solids wasting occurs immediately after a backwash cycle is completed, the backwash/waste pump remains on during the backwash-to-solids waste mode transition. The solids are pumped on an intermittent basis, typically to the headworks.

Filtration continues while the filter is in solids waste mode. This feature allows continuous filtration while maintaining efficient filter performance.

Settled Solids Removal

Copyright 2015 Aqua-Aerobic Systems, Inc.

6306 N. Alpine Rd. Loves Park, IL 61111-7655 p 815.654.2501 f 815.654.2508 www.aqua-aerobic.com

Control System

AquaDisk filter operation is automatically controlled by a programmable logic controller (PLC). For multiple filter installations, the PLC based control systems are networked with the SCADA for monitoring or intercommunication purposes.

PLC Equipment Description

The PLC system monitors, regulates and sequences all automatic functions. The PLC controllers are Allen-Bradley MicroLogix Controllers. PLC inputs are via 16 point (120 VAC) discrete or 8 point (4-20mA) analog input modules, while outputs are via 16 point discrete (Relay) or 4 point (4-20mA) analog output modules. In the case of a power loss, the system will resume operation at the point from where they left off as soon as power is restored. On power-up, any multiple motor starts will commence at 10-second intervals. The PLC processors are equipped with a battery to provide ladder program and data table memory support in case of a power failure.

Automatic Operation

PLC systems allow the AquaDisk filter system to perform all the standard functions and provide maximum flexibility for variation in control strategies. Aqua-Aerobic Systems, Inc. provides all standard and customized programs through our in-house Electrical Engineering group. For the AquaDisk filter, these systems are level based with time overrides. They also provide a complement of fully adjustable set points in addition to filter system monitoring.

Manual Override

Aqua-Aerobic Systems control panels are equipped with Hand/Off/Auto motor switches that will allow for switching the respective hand switch from auto to the desired position to operate any motor independent of the current PLC command.

Local Operator Interface Panel

Each PLC control panel is equipped with a Panelview Plus Human Machine Interface (HMI) unit manufactured by Allen-Bradley. The operator interface unit features a color LCD touch screen display and communicates directly to the PLC. This HMI unit will allow the changing of counter and timer values to adjust the various plant controls. The ability to monitor basic system status throughout the plant is also provided at this unit.

This display contains various display pages used to provide the operator with filter status and alarm information. There are also pages from which the operator enters changes to process variables and timers to control the automatic sequencing.

Copyright 2015 Aqua-Aerobic Systems, Inc.

6306 N. Alpine Rd. Loves Park, IL 61111-7655 p 815.654.2501 f 815.654.2508 www.aqua-aerobic.com

Interface Operation

Some of the various screens available through the local operator control panel are listed below:

- System status
- Backwash interval/duration adjust
- Sludge waste interval/duration adjust
- Elapsed time meters and totalizers (motors and process)
- Backwash interval history
- Alarm display
- Alarm history

Controls Programming Documentation

As a standard procedure, Aqua-Aerobic Systems will provide a written control strategy with the equipment submittal information. In addition to the control strategy, we can also provide the PLC programming documentation for onsite troubleshooting purposes. Due to the proprietary nature of the program, a confidentially agreement is necessary if this information is provided.

Copyright 2015 Aqua-Aerobic Systems, Inc.

6306 N. Alpine Rd. Loves Park, IL 61111-7655 p 815.654.2501 f 815.654.2508 www.aqua-aerobic.com

AQUA-AEROBIC SYSTEMS, INC.
Partnering for Solutions

Fox Metro Water Reclamation District Successfully Treats CSO with AquaDiamond® Cloth Media Filtration

When the Fox Metro Water Reclamation District (FMWRD) started up in the late 1920's, the original trickling filter system was built to treat only 8 Million Gallons per Day (MGD) of wastewater. Today, the FMWRD is designed for an average daily flow of 72 MGD and a peak flow of 144 MGD of wastewater generated by a population nearing 250,000 living in the Illinois communities of Aurora, North Aurora, Boulder Hill, Montgomery, Oswego, Sugar Grove and portions of Yorkville and Batavia. The influent to the facility is a mixture of domestic wastewater, industrial wastewater, and stormwater from combined sewer overflows (CSO). Though significant progress has been made to segregate the aged combined sewer system, the FMWRD still faces the treatment challenge of high flows caused by rainfall and melting snow. In addition, solids carryover from the secondary clarifiers during these events can result in total suspended solids (TSS) concentrations to the filters in excess of 100 mg/l.

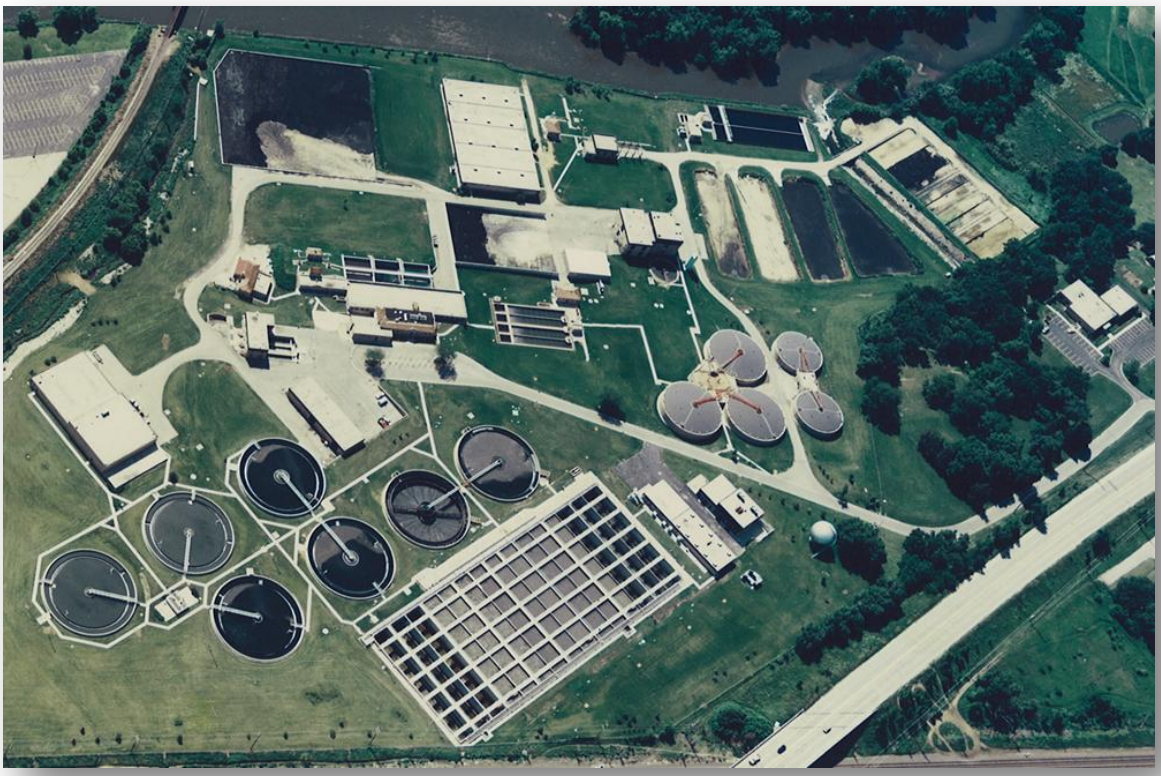

Figure1. Aerial view of Fox Metro Water Reclamation District

Copyright 2013 Aqua-Aerobic Systems, Inc.

6306 N. Alpine Rd. Loves Park, IL 61111-7655 p 815.654.2501 f 815.654.2508 www.aqua-aerobic.com

The main plant processes include a bar screen, grit removal, primary clarifiers, aeration tanks, secondary clarifiers, tertiary AquaDiamond® cloth media filters, chlorination, de-chlorination, and outfall to the Fox River as illustrated in Figure 1. During wet weather, the FMWRD operates a separate "Wet Weather Treatment Facility" consisting of a large storage/sedimentation basin as shown in Figure 2, chemical feed system as shown in Figure 3, and disinfection equipment. Alum and Cationic Polymer (Clarifloc® A-210P) are mixed with the combined sewer overflow (CSO) in a chamber which conveys CSO to the large storage/sedimentation basin to reduce TSS and turbidity. If the water level in the CSO receiving basin doesn't reach a high level set point during small flow events, the stored contents are simply routed back to the headworks. If the water level reaches the high level set point during heavier storm events, the water is then clarified over fixed-weirs located at one end of the storage/sedimentation basin. The plant has the ability to introduce the clarified water to the inlet to the filtration system or prior to the chlorination/de-chlorination system before it is then discharged into the Fox River. Alternatively, the plant can also convey the clarified water to the headworks for re-treatment if desired.

Figure 2. CSO receiving storage/sedimentation basin

Figure 3. CSO chemical feed system

In general, CSO events occur approximately 5-6 times per year at the FMWRD facility. The Wet Weather Treatment Facility can take up to 54 MGD of CSO during a wet weather event. Information including the storm intensity and the current state of the main plant operations is used to decide whether to divert CSO flow to the Wet Weather Treatment Facility. During significant wet weather events, the AquaDiamond tertiary filtration system is used to treat both the CSO discharge and the secondary clarified effluent. These flow streams are combined and well mixed prior to entering the tertiary filters.

In January 2005, the plant retrofitted the first of their nine (9) existing 16' × 112' traveling bridge sand filters with an 80' long AquaDiamond cloth media filter. By selecting the AquaDiamond technology, FMWRD was able to increase the maximum hydraulic flow by nearly 2.5 times the single sand filter's maximum design capacity

and the solids loading capacity by a similar factor. Since then, five additional sand filters have been converted to the cloth media technology with one more currently under construction. With the seven cloth media filters in service, the treatment capacity of the filtration system will support an average design flow of 84 MGD and peak flow capacity of 168 MGD. An overview of one AquaDiamond cloth media filter is shown in Figure 4.

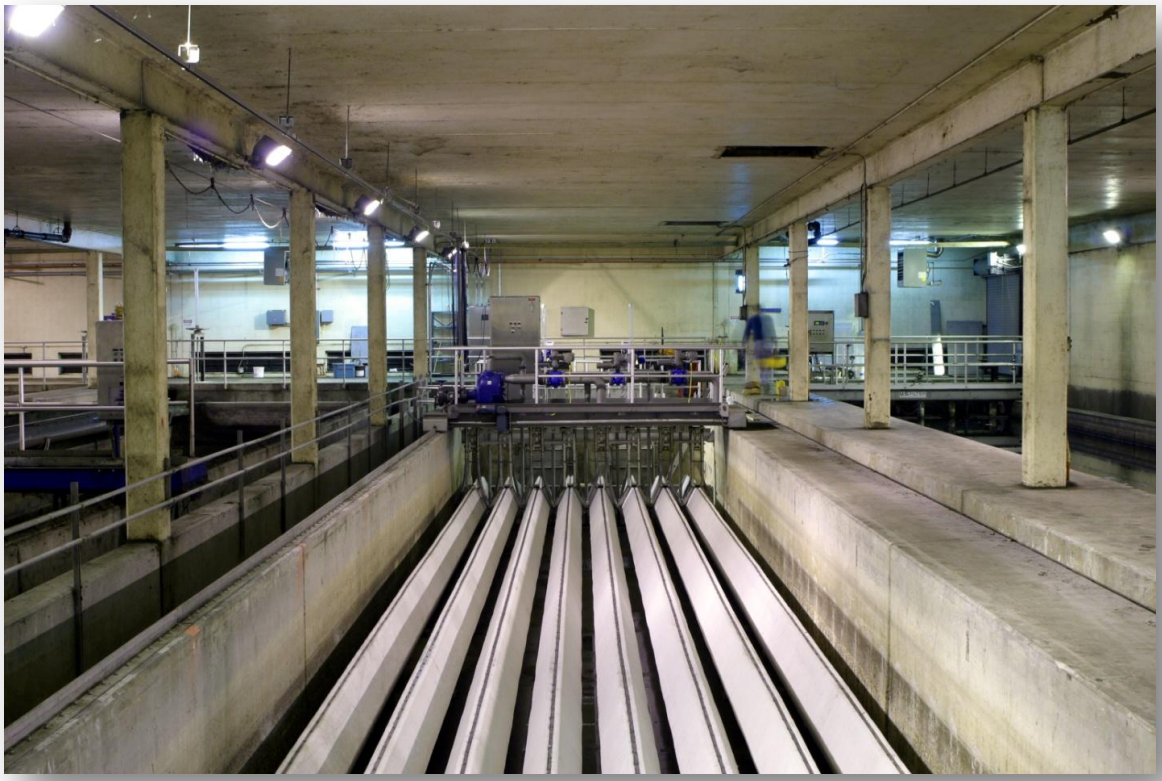

Figure 4. An overview of AquaDiamond® cloth media filter.

The enhanced hydraulic capacity has greatly helped the plant to cope with peak flow conditions from storm events. The historical discharge monitoring data at FMWRD in 2013, as shown in Table 1, indicates that the month of April 2013 was very rainy, having the monthly total rainfall depth of 9.89 inches.

Table 1. Historical discharge monitoring data at FMWRD in 2013.

Time	Raw Sewage Influent TSS, mg/L	Monthly Average Effluent TSS, mg/L	Monthly Average Flow, MGD	Daily Maximum Flow, MGD	Monthly Total Rainfall Depth, inch	Monthly Total Rainfall Duration, hours	Monthly Total CSO Duration, hours
Jan-13	178	3	31.37	83.21	N/A	N/A	N/A
Feb-13	142	2	37.66	56.46	N/A	N/A	N/A
Mar-13	156	2	42.01	79.86	N/A	N/A	N/A
Apr-13	168	4	54.55	127.32	9.89	80.5	32
May-13	159	2	43.2	61.51	N/A	N/A	N/A
Jun-13	175	2	44.33	71.56	N/A	N/A	N/A

Note: Data extracted from Illinois Environmental Protection Agency (http://dataservices.epa.illinois.gov/dmrdata/dmrsearch.aspx).

AQUA-AEROBIC SYSTEMS, INC.
Partnering for Solutions

OptiFiber Cloth Media Filter

Reuse Applications

ALTONA WWTP, AUSTRALIA **701595**

Waste Characteristics:	Municipal / Domestic
Treatment Objective:	TSS / NTU
StartUp Date:	07/01/2006
Avg. Daily Flow(MGD):	4.233
Max. Design Flow(MGD):	4.672

ASPEN CONSOLIDATED SAN DISTRICT WWTF UPGRADE, CO **100021B**

Waste Characteristics:	Municipal / Domestic
Treatment Objective:	TSS / NTU
StartUp Date:	06/19/2008
Avg. Daily Flow(MGD):	3
Max. Design Flow(MGD):	4

ATWATER BERT CRANE WWTP, CA **110199**

Waste Characteristics:	Municipal / Domestic
Treatment Objective:	TSS / NTU
StartUp Date:	01/26/2012
Avg. Daily Flow(MGD):	6
Max. Design Flow(MGD):	11.2

AUSTIN RANCH, SURPRISE WRF SPA III PH 1, AZ **108327**

Waste Characteristics:	Municipal / Domestic
Treatment Objective:	TSS / NTU
StartUp Date:	11/05/2008
Avg. Daily Flow(MGD):	1.8
Max. Design Flow(MGD):	3.6

BAKERSFIELD WWTP NO3 2007 EXP, CA **102346C**

Waste Characteristics:	Municipal / Domestic
Treatment Objective:	TSS / NTU
StartUp Date:	02/19/2010
Avg. Daily Flow(MGD):	2
Max. Design Flow(MGD):	2

BEND WWTP REUSE FACILITY **105122d**

Waste Characteristics:	Municipal / Domestic
Treatment Objective:	TSS / NTU
StartUp Date:	06/26/2003
Avg. Daily Flow(MGD):	3
Max. Design Flow(MGD):	5

Confidential Copyright © 2013 Aqua-Aerobic Systems, Inc.

6306 N. Alpine Rd. Loves Park, IL 61111 -7655 p 815.654.2501 f 815.654.2508 www.aqua-aerobic.com

BRUSHY CREEK REGIONAL WWTP **108701**

Waste Characteristics:	Municipal / Domestic
Treatment Objective:	TSS / NTU
StartUp Date:	08/08/2012
Avg. Daily Flow(MGD):	3
Max. Design Flow(MGD):	6

BUCKEYE 3.0 MGD EXPANSION, AZ (CENTRAL) **107006**

Waste Characteristics:	Municipal / Domestic
Treatment Objective:	TSS / NTU
StartUp Date:	02/26/2007
Avg. Daily Flow(MGD):	3
Max. Design Flow(MGD):	8

CHIQUITA WATER RECLAMATION PHASE III EXPANSION **101317c**

Waste Characteristics:	Municipal / Domestic
Treatment Objective:	TSS / NTU / Reuse
StartUp Date:	06/11/2004
Avg. Daily Flow(MGD):	7.5
Max. Design Flow(MGD):	7.5

CLEAR LAKE SANITARY DISTRICT, IA **104927b**

Waste Characteristics:	Municipal / Domestic
Treatment Objective:	TSS / Reuse
StartUp Date:	12/03/2003
Avg. Daily Flow(MGD):	3
Max. Design Flow(MGD):	3

DADE CITY UTILITY SYSTEM IMPROVEMENTS **106161**

Waste Characteristics:	Municipal / Domestic
Treatment Objective:	TSS / NTU
StartUp Date:	12/12/2002
Avg. Daily Flow(MGD):	2.79
Max. Design Flow(MGD):	5.58

DEER CREEK WWTP, CA **106367**

Waste Characteristics:	Municipal / Domestic
Treatment Objective:	TSS / NTU
StartUp Date:	01/23/2004
Avg. Daily Flow(MGD):	3.6
Max. Design Flow(MGD):	10.3

EUSTIS WWTP **102375C**

Waste Characteristics:	Municipal / Domestic
Treatment Objective:	TSS / Reuse
StartUp Date:	03/03/2000
Avg. Daily Flow(MGD):	4.5

Confidential Copyright ©2013 Aqua-Aerobic Systems, Inc.

6306 N. Alpine Rd. Loves Park, IL 61111 -7655 p 815.654.2501 f 815.654.2508 www.aqua-aerobic.com

FORT BEND COUNTY MUD NO. 25 WWTP, TX **107038**

Waste Characteristics: Municipal / Domestic
Treatment Objective: TSS / NTU
StartUp Date: 09/27/2006
Avg. Daily Flow(MGD): 2
Max. Design Flow(MGD): 4

HARLINGEN **104394B**

Waste Characteristics: Municipal / Domestic
Treatment Objective: TSS / NTU / Reuse
StartUp Date: 05/03/1998
Avg. Daily Flow(MGD): 6.1

JEA, DISTRICT II, WATER RECLAMATION FACILITY **105927**

Waste Characteristics: Municipal / Unknown Municipal
Treatment Objective: TSS / Reuse
StartUp Date: 05/28/2001
Avg. Daily Flow(MGD): 6
Max. Design Flow(MGD): 11.2

KETCHUM WWTP, ID **107537**

Waste Characteristics: Municipal / Domestic
Treatment Objective: TSS / NTU / Reuse
StartUp Date: 12/14/2006
Avg. Daily Flow(MGD): 4
Max. Design Flow(MGD): 6

LAHAINA WWRF HI **108553**

Waste Characteristics: Municipal / Domestic
Treatment Objective: TSS / NTU
StartUp Date: 02/22/2022
Avg. Daily Flow(MGD): 6
Max. Design Flow(MGD): 11

LAS VEGAS WWTP TERTIARY EXPANSION, CO **104324f**

Waste Characteristics: Municipal / Domestic
Treatment Objective: TSS / NTU
StartUp Date: 05/20/2004
Avg. Daily Flow(MGD): 4
Max. Design Flow(MGD): 4

LIVE OAK WWTP 2007 UPGRADE, CA **105419B**

Waste Characteristics: Municipal / Domestic
Treatment Objective: TSS / NTU
StartUp Date: 08/18/2011
Avg. Daily Flow(MGD): 4.27
Max. Design Flow(MGD): 4.27

Confidential Copyright ©2013 Aqua-Aerobic Systems, Inc.

6306 N. Alpine Rd. Loves Park, IL 61111 -7655 p 815.654.2501 f 815.654.2508 www.aqua-aerobic.com

MARCH WWRF - PHASE 2 EXP, CA **107194**

Waste Characteristics:	Municipal / Domestic
Treatment Objective:	TSS / NTU
StartUp Date:	02/24/2011
Avg. Daily Flow(MGD):	3
Max. Design Flow(MGD):	5

MERIDIAN, ID **108334**

Waste Characteristics:	Municipal / Domestic
Treatment Objective:	TSS / NTU
StartUp Date:	11/28/2007
Avg. Daily Flow(MGD):	6.5
Max. Design Flow(MGD):	11

MOUNTAIN HOUSE WWTP PHASE II EXPANSION, CA **106451**

Waste Characteristics:	Municipal / Domestic
Treatment Objective:	TSS / NTU
StartUp Date:	05/19/2005
Avg. Daily Flow(MGD):	3
Max. Design Flow(MGD):	5.4

OAKDALE WWTP UPGRADE, CA **107972**

Waste Characteristics:	Municipal / Domestic
Treatment Objective:	TSS / NTU
StartUp Date:	01/13/2011
Avg. Daily Flow(MGD):	4
Max. Design Flow(MGD):	10

PALM VALLEY WRF **106039**

Waste Characteristics:	Municipal / Domestic
Treatment Objective:	TSS / NTU / Reuse
StartUp Date:	03/07/2002
Avg. Daily Flow(MGD):	4.1
Max. Design Flow(MGD):	8.2

PERRIS VALLEY RWRF, CA **106518**

Waste Characteristics:	Municipal / Domestic
Treatment Objective:	TSS / NTU
StartUp Date:	01/06/2005
Avg. Daily Flow(MGD):	4.16
Max. Design Flow(MGD):	4.16

PRESCOTT VALLEY WWTP UPGRADE AND EXP., AZ **105428B**

Waste Characteristics:	Municipal / Domestic
Treatment Objective:	TSS / NTU
StartUp Date:	11/08/2006
Avg. Daily Flow(MGD):	3.75
Max. Design Flow(MGD):	7.5

Confidential Copyright ©2013 Aqua-Aerobic Systems, Inc.

6306 N. Alpine Rd. Loves Park, IL 61111 -7655 p 815.654.2501 f 815.654.2508 www.aqua-aerobic.com

ROCHESTER WASTEWATER TREATMENT PLANT, NH **102627A**

Waste Characteristics:	Municipal / Domestic
Treatment Objective:	TSS / NTU
StartUp Date:	05/11/2000
Avg. Daily Flow(MGD):	2.79
Max. Design Flow(MGD):	6.68

WEDGEFIELD WWTF **105581**

Waste Characteristics:	Municipal / Domestic
Treatment Objective:	TSS / NTU / Reuse
StartUp Date:	07/02/2000
Avg. Daily Flow(MGD):	0.929
Max. Design Flow(MGD):	1.85

WOODLAND WPCF, CA **106553A**

Waste Characteristics:	Municipal / Domestic
Treatment Objective:	TSS / NTU / Reuse
StartUp Date:	04/12/2006
Avg. Daily Flow(MGD):	10.4
Max. Design Flow(MGD):	15.6

Confidential Copyright ©2013 Aqua-Aerobic Systems, Inc.

6306 N. Alpine Rd. Loves Park, IL 61111 -7655 p 815.654.2501 f 815.654.2508 www.aqua-aerobic.com

AQUA-AEROBIC SYSTEMS, INC.
Partnering for Solutions

Cloth Media Filter Installation

River Water Treatment

DESERT MTN AQUIFER STORAGE AND RECOVERY (AKA CAP) **106311**

Address:		37080 North Cave Creek Road Scottsdale,Arizona 85262 USA
Phone:		480/312-8724
Contact:		Arthur Nunez
Waste Characteristics:		Municipal / Domestic
Treatment Objective:		TSS
StartUp Date:		03/03/2004
Avg. Daily Flow(MGD):		2.125
Max. Design Flow(MGD):		4.25
Equipment:	3	Tertiary Filter(s) ADF Disk SS Package Filter(s)

Confidential Copyright © 2014 Aqua-Aerobic Systems, Inc.

6306 N. Alpine Rd. Loves Park, IL 61111 -7655 p 815.654.2501 f 815.654.2508 www.aqua-aerobic.com

AQUA-AEROBIC SYSTEMS, INC.
Partnering for Solutions

Cloth Media Filter Installation

River Water Treatment

ORANGE COUNTY WATER DIST RWSR, CA **105612A**

Address:	18700 Ward Street Fountain Valley,California 92708 USA
Phone:	714-378-3292
Contact:	Sandy Scott-Roberts, P.E.
Waste Characteristics:	Municipal / Domestic
Treatment Objective:	TSS
StartUp Date:	07/12/2012
Avg. Daily Flow(MGD):	3.232
Max. Design Flow(MGD):	5.171
Equipment:	1 Tertiary Filter(s) 12 Disks,ADF Disk Package Filter(s),Classic,Model 54,PES-14,PS Package

Confidential Copyright © 2014 Aqua-Aerobic Systems, Inc.

6306 N. Alpine Rd. Loves Park, IL 61111 -7655 p 815.654.2501 f 815.654.2508 www.aqua-aerobic.com

2. Finished Water Pumps

Pump size & type	: 10EBM
Based on curve no.	: EC-2669
Number of stages	: 3

Customer	: Brenda Keenan	Capacity	: 700.0 USgpm
Item number	: Small Effluent	Head	: 31.00 ft
Service	:	Density / Specific gravity	: - / 0.999
Flowserve reference	: 423953871	Pump speed	: 1180 rpm
Date	: June 9, 2016	Test tolerance	: ANSI/HI 14.6 Grade 1U

CURVES ARE APPROXIMATE, PUMP IS GUARANTEED FOR ONE SET OF CONDITIONS; CAPACITY, HEAD, AND EFFICIENCY.

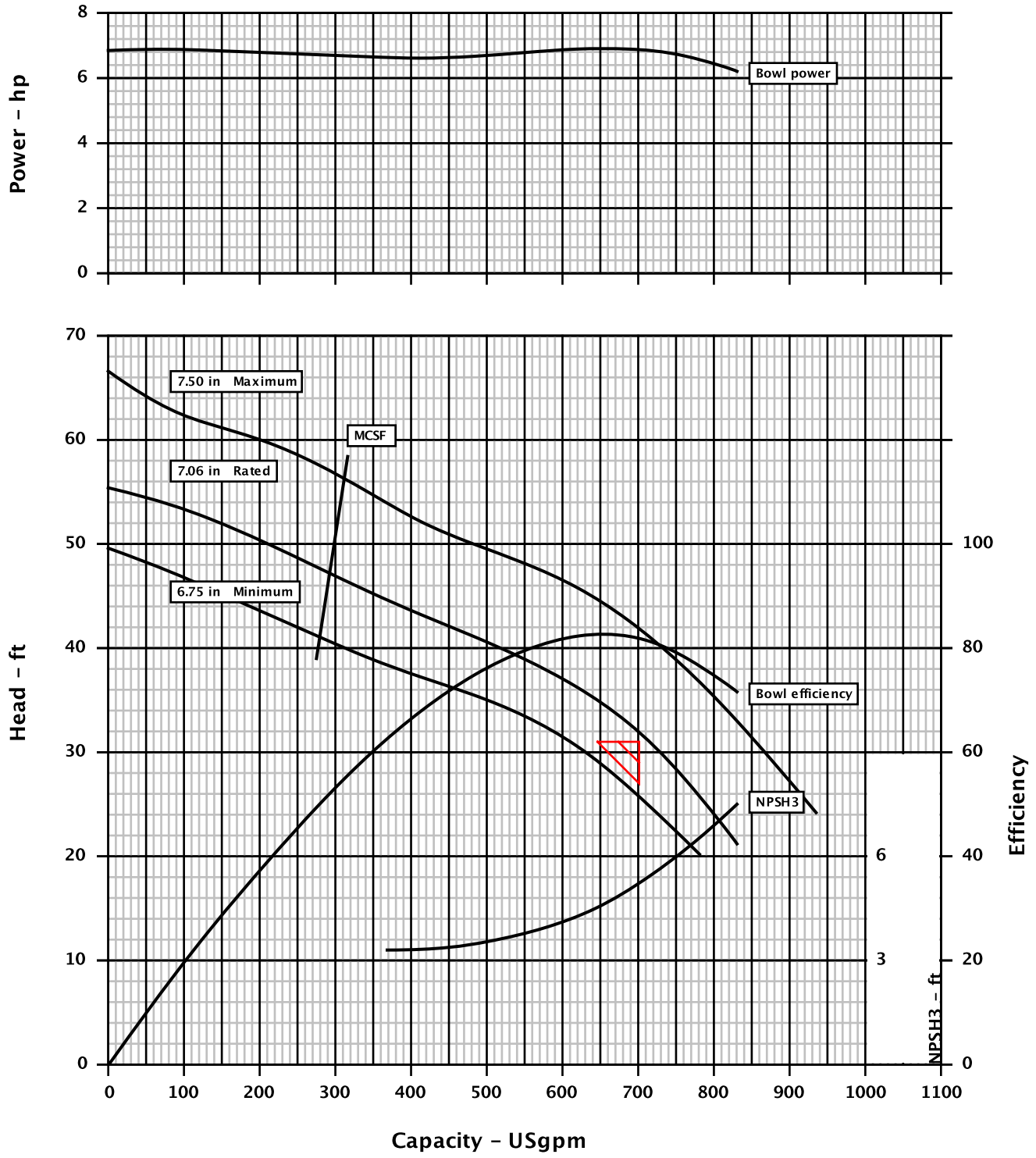

Bowl head of 32.25 ft corresponds with 31 ft head at low liquid level adjusted for elevation and friction losses.

Copyright © 2016 Flowserve. All rights reserved.

Hydraulic Datasheet

Customer	: Brenda Keenan	Pump / Stages	: 10EBM	/ 3
Customer reference	: -	Based on curve no.	: EC-2669	
Item number	: Small Effluent	Flowserve reference	: 423953871	
Service	:	Date	: June 9, 2016	

Operating Conditions

Capacity	: 700.0 USgpm
Water capacity (CQ=1.00)	: -
Normal capacity	: -
Total developed head	: 31.00 ft
Water head (CH=1.00)	: -
NPSH available (NPSHa)	: 33.4 ft
NPSHa less NPSH margin	: -
Maximum suction pressure	: Not applicable
Rated suction pressure	: Not applicable

Liquid

Liquid type	: Fresh water
Liquid description	:
Temperature / Specific gravity	: 60 °F / 0.999
Viscosity / Vapor pressure	: 1.00 cSt / 0.26 psia

Materials / Specification

Material column code	: B30

Other Requirements

Hydraulic selection : No specification
Construction : No specification
Test tolerance : ANSI/HI 14.6 Grade 1U
Driver Sizing : Max Power (SO to EOC) not using SF

Performance

Pump speed	: 1,180 rpm	Impeller diameter	: Rated / Maximum / Minimum
NPSH required (NPSH3)	: 5.1 ft		: 7.06 in / 7.50 in / 6.75 in
Minimum submergence	: 21.00 in	Impeller diameter ratio (rated/max)	: 94.2 %
Hydraulic power	: 5.47 hp	Maximum head at rated diameter	: 55.46 ft
Efficiency (Pump overall / Bowl) (CE=1.00)	: 78.3 % / 82.3 %	Head rise to shut off	: 72.0 %
Power (rated/max)	: 6.99 hp / 7.01 hp	Total head ratio (rated/max)	: 76.7 %
Driver power	: 7.50 hp / 5.59 kW	Flow at BEP	: 652.5 USgpm
Bowl pressure	: 24.0 psig	Flow as % of BEP	: 107.3 %
(based on shut off @ cut dia/rated SG)		Minimum continuous flow	: 292.2 USgpm
Maximum allowable	: 472.0 psig	Rated thrust (at Rated flow)	: 361.4 lbf
Bowl & column hydrotest	: 30.0 psig	Maximum thrust (at Shut off flow)	: 561.3 lbf
Dischg Head Dischg Region MAWP	: 175.0 psig	Min thrust - Runout flow / Max Suction	: 264.6 lbf
Suction specific speed	: 8,790 (US units)	(A negative thrust value indicates an upthrust condition)	

CURVES ARE APPROXIMATE, PUMP IS GUARANTEED FOR ONE SET OF CONDITIONS; CAPACITY, HEAD, AND EFFICIENCY.

Bowl performance shown below is corrected for materials, viscosity and construction.

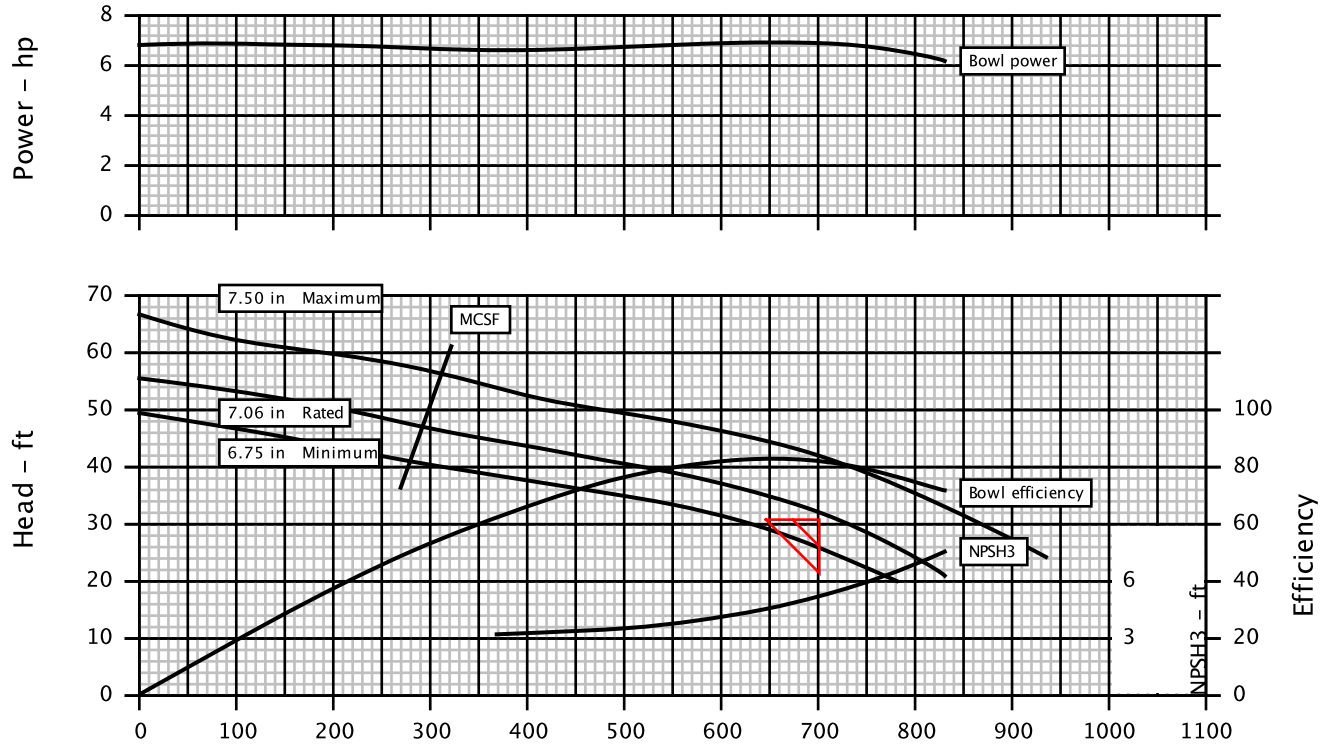

Bowl head of 32.25 ft corresponds with 31 ft head at low liquid level adjusted for elevation and friction losses.

Copyright © 2016 Flowserve. All rights reserved.

Full Page GA Drawing

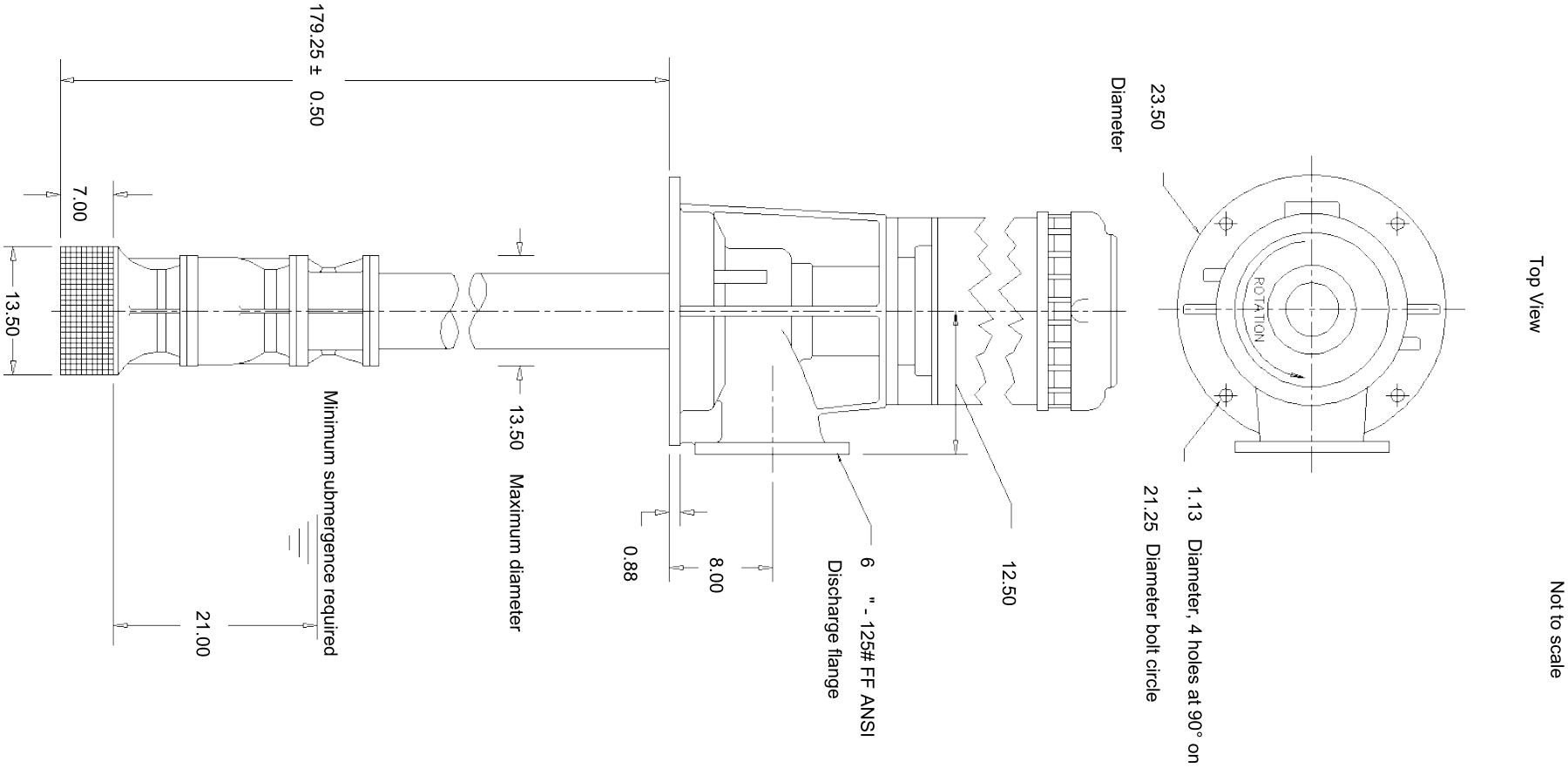

All dimensions are in inches unless otherwise specified

Customer	: Brenda Keenan	Pump size & type	: 10EBM	Drawing number	: -
Item number	: Small Effluent	Pump speed / Stages	: 1,180 rpm / 3	Date	: June 9, 2016
Service	:	Flow / Head	: 700.0 USgpm / 31.00 ft	Certified by / Date :	: -
Customer PO #	: -	Driver power / Frame	: 7.50 hp / 5.59 kW / 254	Seal type	: Packing
Flowserve reference	: 423953871	Volts / Phase / Hz	: 230 V / 3 / 60 Hz	Seal flush plan	: None

Copyright © 2016 Flowserve. All rights reserved.

Pump size & type	: 12EBM
Based on curve no.	: EC-2420
Number of stages	: 2

Customer	: Brenda Keenan	Capacity	: 1,400.0 USgpm
Item number	: Large Effluent	Head	: 33.00 ft
Service	:	Density / Specific gravity	: - / 0.999
Flowserve reference	: 423953871	Pump speed	: 1180 rpm
Date	: June 9, 2016	Test tolerance	: ANSI/HI 14.6 Grade 1U

CURVES ARE APPROXIMATE, PUMP IS GUARANTEED FOR ONE SET OF CONDITIONS; CAPACITY, HEAD, AND EFFICIENCY.

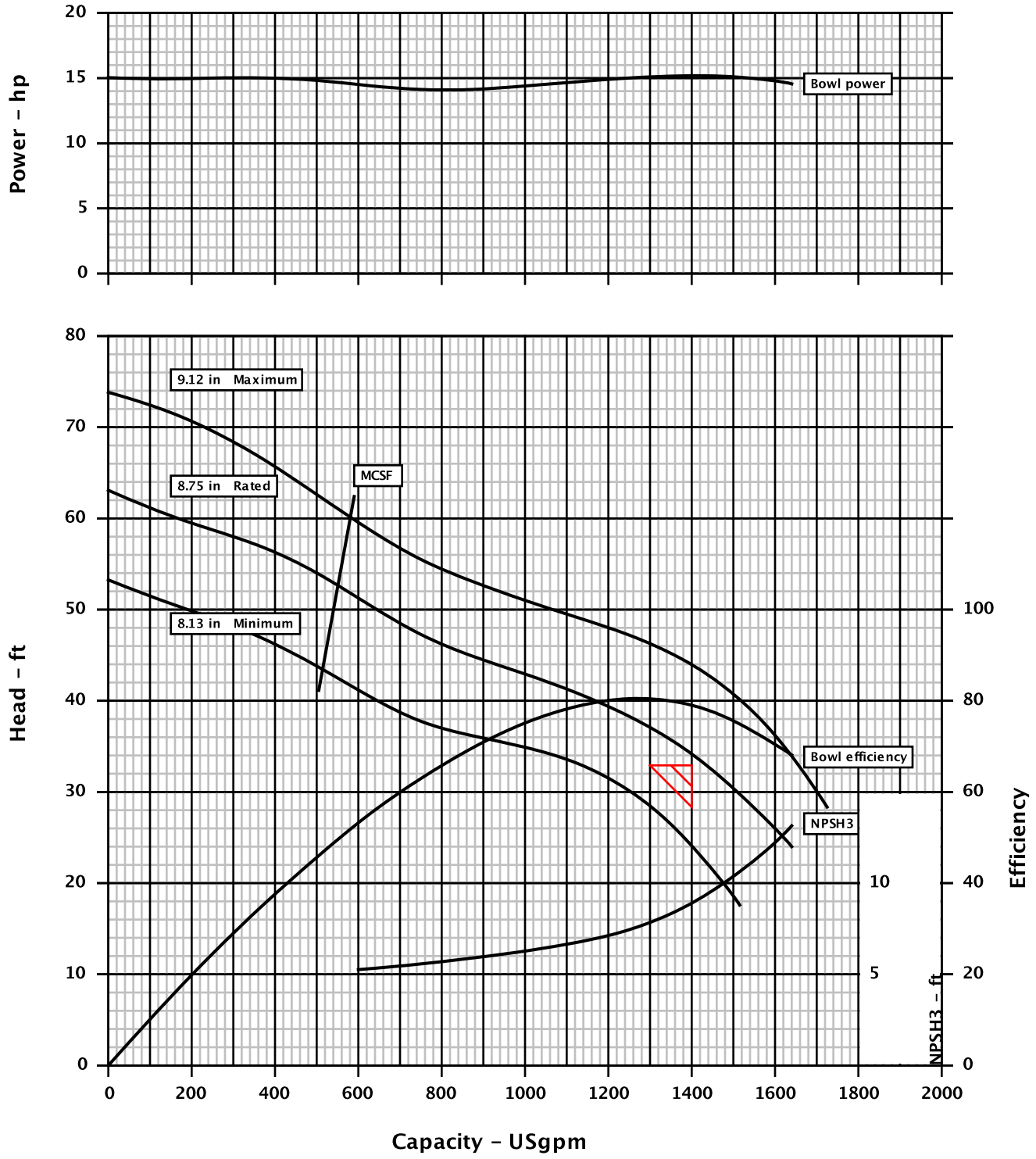

Bowl head of 34.33 ft corresponds with 33 ft head at low liquid level adjusted for elevation and friction losses.

Copyright © 2016 Flowserve. All rights reserved.

Hydraulic Datasheet

Customer	: Brenda Keenan	Pump / Stages	: 12EBM	/ 2
Customer reference	: -	Based on curve no.	: EC-2420	
Item number	: Large Effluent	Flowserve reference	: 423953871	
Service	:	Date	: June 9, 2016	

Operating Conditions

Capacity	: 1,400.0 USgpm
Water capacity (CQ=1.00)	: -
Normal capacity	: -
Total developed head	: 33.00 ft
Water head (CH=1.00)	: -
NPSH available (NPSHa)	: 33.4 ft
NPSHa less NPSH margin	: -
Maximum suction pressure	: Not applicable
Rated suction pressure	: Not applicable

Liquid

Liquid type	: Fresh water
Liquid description	:
Temperature / Specific gravity	: 60 °F / 0.999
Viscosity / Vapor pressure	: 1.00 cSt / 0.26 psia

Materials / Specification

Material column code	: B30

Other Requirements

Hydraulic selection : No specification
Construction : No specification
Test tolerance : ANSI/HI 14.6 Grade 1U
Driver Sizing : Max Power (SO to EOC) not using SF

Performance

Pump speed	: 1,180 rpm	Impeller diameter	: Rated / Maximum / Minimum
NPSH required (NPSH3)	: 8.8 ft		: 8.75 in / 9.12 in / 8.13 in
Minimum submergence	: 24.00 in	Impeller diameter ratio (rated/max)	: 95.9 %
Hydraulic power	: 11.7 hp	Maximum head at rated diameter	: 63.08 ft
Efficiency (Pump overall / Bowl) (CE=1.00)	: 74.9 % / 78.3 %	Head rise to shut off	: 83.7 %
Power (rated/max)	: 15.6 hp / 15.6 hp	Total head ratio (rated/max)	: 77.6 %
Driver power	: 20.0 hp / 14.9 kW	Flow at BEP	: 1,271.7 USgpm
Bowl pressure	: 27.3 psig	Flow as % of BEP	: 110.1 %
(based on shut off @ cut dia/rated SG)		Minimum continuous flow	: 554.0 USgpm
Maximum allowable	: 430.0 psig	Rated thrust (at Rated flow)	: 514.1 lbf
Bowl & column hydrotest	: 34.1 psig	Maximum thrust (at Shut off flow)	: 871.1 lbf
Dischg Head Dischg Region MAWP	: 175.0 psig	Min thrust - Runout flow / Max Suction	: 385.5 lbf
Suction specific speed	: 8,730 (US units)	(A negative thrust value indicates an upthrust condition)	

CURVES ARE APPROXIMATE, PUMP IS GUARANTEED FOR ONE SET OF CONDITIONS; CAPACITY, HEAD, AND EFFICIENCY.

Bowl performance shown below is corrected for materials, viscosity and construction.

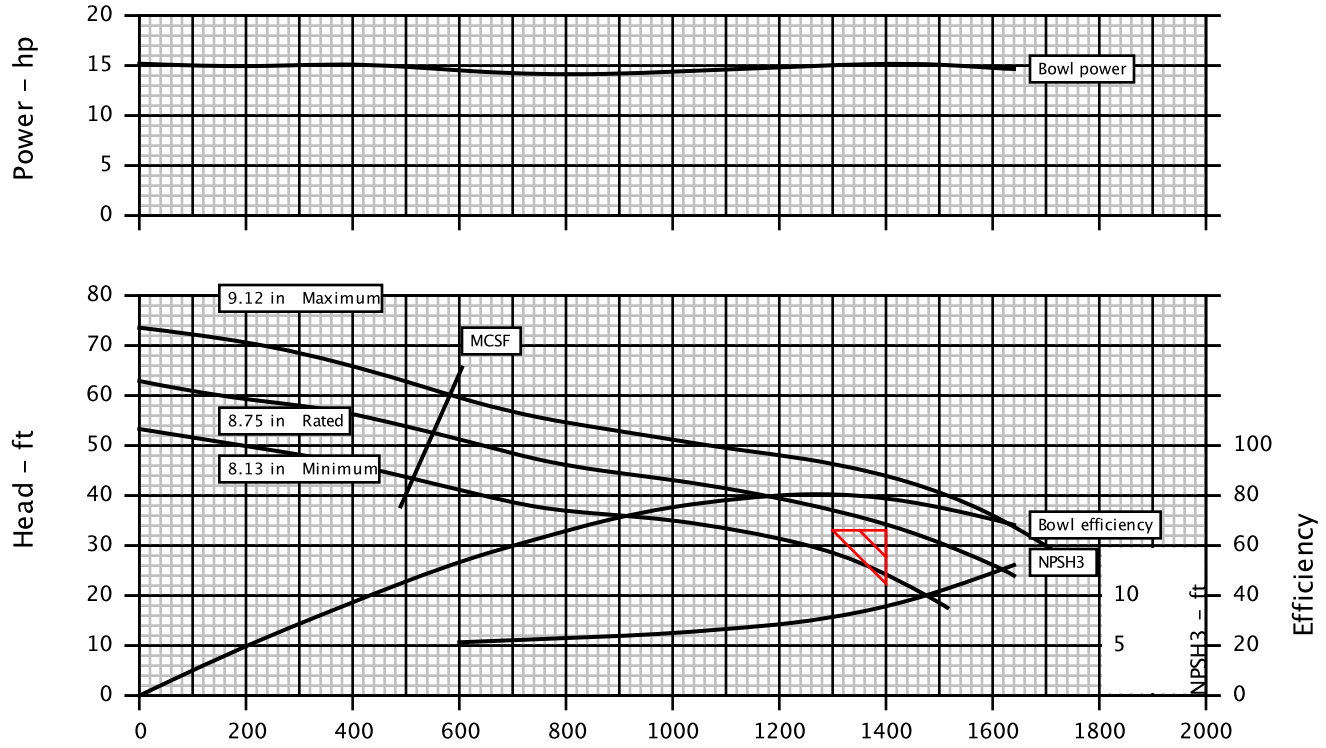

Bowl head of 34.33 ft corresponds with 33 ft head at low liquid level adjusted for elevation and friction losses.

Copyright © 2016 Flowserve. All rights reserved.

Full Page GA Drawing

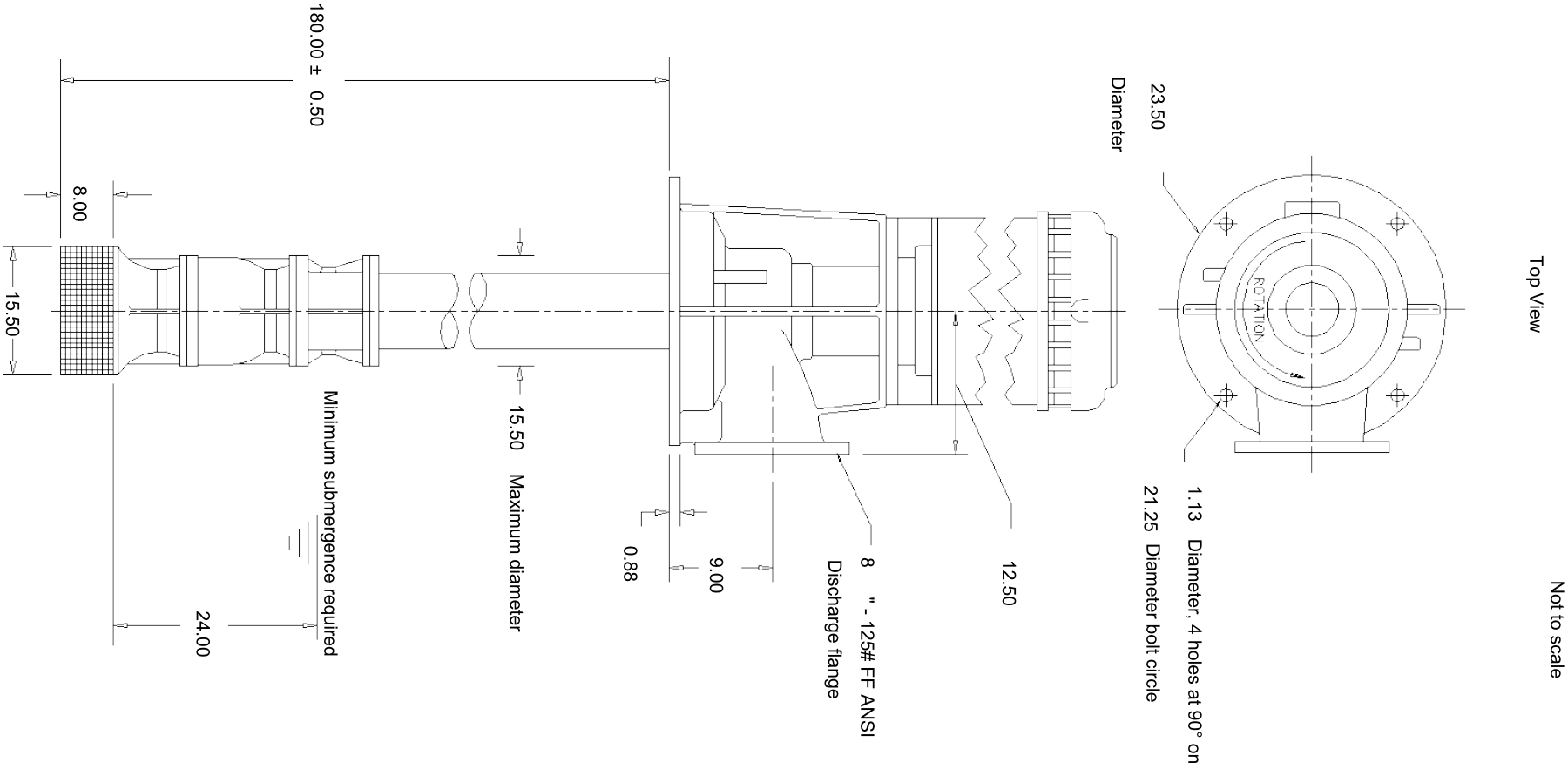

All dimensions are in inches unless otherwise specified

Customer	: Brenda Keenan	Pump size & type	: 12EBM	Drawing number	: -
Item number	: Large Effluent	Pump speed / Stages	: 1,180 rpm / 2	Date	: June 9, 2016
Service	:	Flow / Head	: 1,400.0 USgpm / 33.00 ft	Certified by / Date :	: -
Customer PO #	: -	Driver power / Frame	: 20.0 hp / 14.9 kW / 286	Seal type	: Packing
Flowserve reference	: 423953871	Volts / Phase / Hz	: 230 V / 3 / 60 Hz	Seal flush plan	: None

Copyright © 2016 Flowserve. All rights reserved.

3. Static Mixer

15301 Graham St.
Huntington Beach CA 92649
Toll Free Tel: 800 826 0760
Tel: 310 830 4320

BUDGETARY QUOTATION

TO:	**Tetratech (via TSC Jacobs)**	DATE:	3/22/2016
ATTN:	**Lauren Handell**	FROM:	Sameer Kshirsagar
TEL:	**404-909-3589**	FAX:	310-830-9826
FAX:		TEL:	310-830-4320 x 120
EMAIL:	**lauren.handell@tetratech.com**	EMAIL:	sameer@komax.com

KOMAX PROPOSAL NUMBER **63152-15**
KOMAX MIXER MODEL NUMBER **AF-69515** *(ALUM MIXER)*

Dear Lauren:

Thank you for your interest in our products.
Our LOW dp TRIPLE ACTION mixer, developed specifically to provide superior results for applications of this nature, will directly meet the requirements for your project.

We have successfully installed over 100,000 Static Mixers and over 7,000 Custody Transfer mixers over the past 40 years. Komax mixers employ simple, reliable patented designs to provide the ultimate in mixing.

For additional details, our client list and other products we manufacture, please visit our website at:
www.komax.com
In accordance with your email, we are pleased to offer the following:

Client Application: **Mixing dilute alum into water**

Project Name: **Deltona, FL**

Calculated

	Minimum	Normal	Maximum	
DESIGN FLOW RATE:	**1390**	**2085**	**2780**	**gpm**
	2.0	**3.0**	**4.0**	**MGD**

Viscocity: 1 cp
Sp. Gravity: 1
Customer to confirm data prior to purchasing

VELOCITY:	**2.4**	**3.7**	**4.9**	**ft/sec**
REYNOLDS NO.:	**287,753**	**431,629**	**575,506**	
PRESSURE DROP:	**0.3**	**0.7**	**1.3**	**psig**

Specified **PIPE SIZE:** **16 inch Nominal**

Overall Length **76.0 inch Flange Face to Flange Face**

Description

16" DIA; 150 PSI RATED FRP STATIC MIXER WITH 150 # FLANGES
QTY (3) low dp TRIPLE ACTION MIXING ELEMENTS; QTY (1) 1" 150 # FLANGED ADDITIVE PORT
(ADDITIVE PORT TO BE PROVIDED WITH A PVC INJECTION QUILL)
ASHLAND HETRON 922 RESIN TO BE USED THRUOUT CONSTRUCTION
EXTERIOR SURFACE TO BE COATED WITH UV RESISTANT BLUE GEL COAT

		Qty
Net price	**$**	**1**

Terms **NET 30 DAYS, ON APPROVED CREDIT**
FOB FACTORY, HUNTINGTON BEACH CA
Delivery **5-6 WEEKS after drawing approval, storage charges apply for delayed shipments**
Warranty **1 year after installation or 18 months after shipment. Details available upon request**
Validity of Quote **30 days from date of proposal**

KOMAX SYSTEMS·INC
MIXING BY DESIGN

15301 Graham St.
Huntington Beach CA 92649
Toll Free Tel: 800 826 0760
Tel: 310 830 4320

BUDGETARY QUOTATION

TO:	**Tetratech (via TSC Jacobs)**	DATE:	3/22/2016
ATTN:	**Lauren Handell**	FROM:	Sameer Kshirsagar
TEL:	**404-909-3589**	FAX:	310-830-9826
FAX:		TEL:	310-830-4320 x 120
EMAIL:	**lauren.handell@tetratech.com**	EMAIL:	sameer@komax.com

KOMAX PROPOSAL NUMBER **63152-15**
KOMAX MIXER MODEL NUMBER **AF-69516** *(SODIUM HYPOCHLORITE MIXER)*

Dear Lauren:

Thank you for your interest in our products.
Our LOW dp TRIPLE ACTION mixer, developed specifically to provide superior results for applications of this nature, will directly meet the requirements for your project.

We have successfully installed over 100,000 Static Mixers and over 7,000 Custody Transfer mixers over the past 40 years. Komax mixers employ simple, reliable patented designs to provide the ultimate in mixing.

For additional details, our client list and other products we manufacture, please visit our website at:
www.komax.com
In accordance with your email, we are pleased to offer the following:

Client Application: **Mixing dilute sodium hypochlorite into water**

Project Name: **Deltona, FL**

Calculated

	Minimum	Normal	Maximum	
DESIGN FLOW RATE:	**1390**	**2085**	**2780**	**gpm**
	2.0	**3.0**	**4.0**	**MGD**

Viscocity: 1 cp
Sp. Gravity: 1
Customer to confirm data prior to purchasing

VELOCITY:	**2.4**	**3.7**	**4.9**	**ft/sec**
REYNOLDS NO.:	**287,753**	**431,629**	**575,506**	
PRESSURE DROP:	**0.3**	**0.7**	**1.3**	**psig**

Specified **PIPE SIZE:** **16 inch Nominal**

Overall Length **76.0 inch Flange Face to Flange Face**

Description

16" DIA; 150 PSI RATED FRP STATIC MIXER WITH 150 # FLANGES
QTY (3) low dp TRIPLE ACTION MIXING ELEMENTS; QTY (1) 1" 150 # FLANGED ADDITIVE PORT
(ADDITIVE PORT TO BE PROVIDED WITH A PVC INJECTION QUILL)
ASHLAND HETRON 922 RESIN TO BE USED THRUOUT CONSTRUCTION
EXTERIOR SURFACE TO BE COATED WITH UV RESISTANT BLUE GEL COAT

		Qty
Net price	**$**	**1**

Terms **NET 30 DAYS, ON APPROVED CREDIT**
FOB FACTORY, HUNTINGTON BEACH CA
Delivery **5-6 WEEKS after drawing approval, storage charges apply for delayed shipments**
Warranty **1 year after installation or 18 months after shipment. Details available upon request**
Validity of Quote **30 days from date of proposal**

15301 Graham St.
Huntington Beach CA 92649
Toll Free Tel: 800 826 0760
Tel: 310 830 4320

BUDGETARY QUOTATION

TO:	**Tetratech (via TSC Jacobs)**	DATE:	6/7/2016
ATTN:	**Rasesh Shah**	FROM:	Sameer Kshirsagar
TEL:		FAX:	310-830-9826
FAX:		TEL:	310-830-4320 x 120
EMAIL:	**rasesh.shah@tetratech.com**	EMAIL:	sameer@komax.com

KOMAX PROPOSAL NUMBER **63152.4-15**
KOMAX MIXER MODEL NUMBER **AF-69785A** *(12% SODIUM HYPO MIXER)*

This Revision changes the line size from 16" to 18" dia.

Dear Rasesh:

Thank you for your interest in our products.
Our LOW dp TRIPLE ACTION mixer, developed specifically to provide superior results for applications of this nature, will directly meet the requirements for your project.

We have successfully installed over 100,000 Static Mixers and over 7,000 Custody Transfer mixers over the past 40 years. Komax mixers employ simple, reliable patented designs to provide the ultimate in mixing.

For additional details, our client list and other products we manufacture, please visit our website at:
www.komax.com
In accordance with your email, we are pleased to offer the following:

Client Application: **Mixing 12 % sodium hypo into water**

Project Name: **Alexander Ave WMS Project 4A-Deltona, FL**

Calculated

	Minimum	Normal	Maximum	
DESIGN FLOW RATE:	**625**	**2780**	**4170**	**gpm**
	0.9	**4.0**	**6.0**	**MGD**

Viscocity: 1 cp
Sp. Gravity: 1
Customer to confirm data prior to purchasing

VELOCITY:	**0.9**	**3.8**	**5.7**	**ft/sec**
REYNOLDS NO.:	**114,384**	**508,780**	**763,170**	
PRESSURE DROP:	**0.04**	**0.8**	**1.8**	**psig**

Specified **PIPE SIZE:** **18 inch Nominal**

Overall Length **84.0 inch Flange Face to Flange Face**

Description

18" DIA; 150 PSI RATED FRP STATIC MIXER WITH 150 # FLANGES
QTY (3) low dp TRIPLE ACTION MIXING ELEMENTS; QTY (1) 1" 150 # FLANGED ADDITIVE PORT (ADDITIVE PORT TO BE PROVIDED WITH A PVC INJECTION QUILL)
ASHLAND HETRON 922 OR EQUAL VE RESIN TO BE USED THRUOUT CONSTRUCTION
EXTERIOR SURFACE TO BE COATED WITH UV RESISTANT BLUE GEL COAT

		Qty
Net price	**$**	**1**

Terms **NET 30 DAYS, ON APPROVED CREDIT**
FOB FACTORY, HUNTINGTON BEACH CA
Delivery **5-6 WEEKS after drawing approval, storage charges apply for delayed shipments**
Warranty **1 year after installation or 18 months after shipment. Details available upon request**
Validity of Quote **30 days from date of proposal**

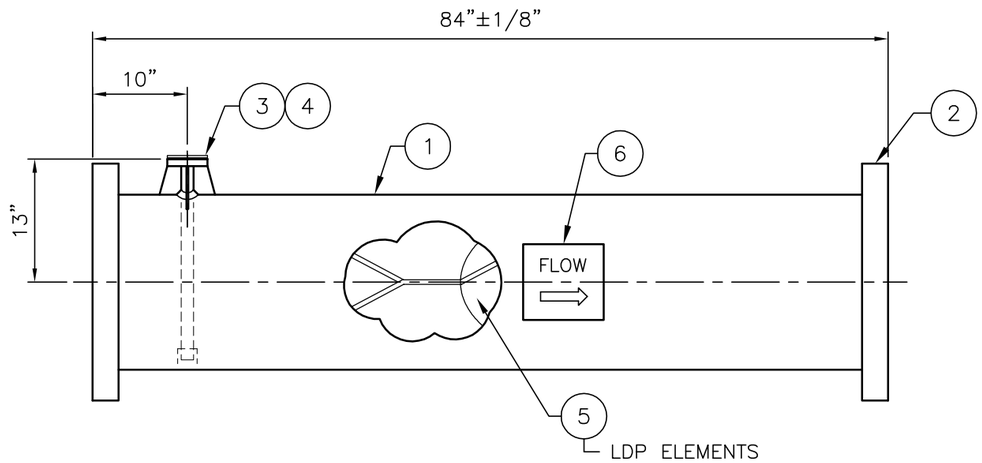

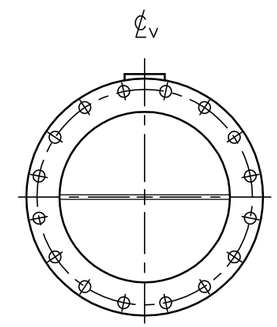

RIGHT SIDE VIEW

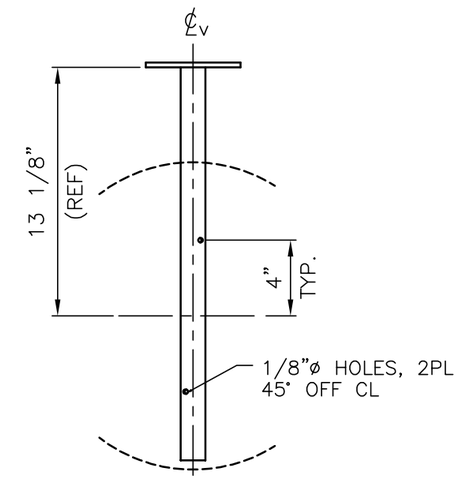

TYP INJECTION QUILL DETAIL
NTS

NOTES:

1. ASHLAND HETRON 922 SERIES VE RESIN USED THROUGHOUT CONSTRUCTION.
2. ALL EXTERNAL SURFACES EXCEPT SEALING SURFACES TO BE COATED WITH ITEM #6.
3. MWP: 150 PSIG
4. MWT: 165°F

KOMAX STATIC MIXER

LIST OF MATERIALS

ITEM NO.	QTY.	DESCRIPTIONS	MATERIAL / REMARKS
1	1	HOUSING, 18 INCH DIAMETER, 150 PSI RATED FILAMENT WOUND PIPE	FRP
2	2	FLANGES, 18"–150# DRILLING FLAT FACED 150 PSI RATED	FRP
3	1	FLANGE, 1"–150# DRILLING FLAT FACED 150 PSI RATED	FRP
4	1	INJECTION QUILL, REMOVABLE	PVC
5	3	KOMAX LDP TRIPLE ACTION MIXING ELEMENTS	FRP
6	1	NAMEPLATE ASSEMBLY	S.S.
7	A/R	COATING, GELCOAT REGAL BLUE #66–4, SEE NOTE #2	---

THIS DOCUMENT IS THE PROPERTY OF KOMAX SYSTEMS, INC. THE INFORMATION HEREON MAY NOT BE USED NOR REPRODUCED WITHOUT THE WRITTEN PERMISSION OF KOMAX SYSTEMS, INC.

MANUFACTURED UNDER ONE OR MORE OF THE FOLLOWING U.S. PATENTS
3201813 3923288, 4034965, 4208136, 4614440, 4808007, 5066137, 5176448, 5484203, 5758967, 5947597, 6024842, 6027241, 6082713, 6102561, 6132079, 6276823
OTHER U.S. AND FOREIGN PATENTS PENDING

KOMAX® SYSTEMS, INC.
15301 GRAHAM ST. HUNTINGTON BEACH, CA 92649–1110 310–830–4320 FAX: 310–830–9826

OUTLINE & MOUNTING CONFIGURATION

KOMAX MODEL NO. AF–69785A

QAS INTERNATIONAL ISO 9001:2008 REGISTERED FIRM

SCALE: 1/16" = 1"	APPROVED BY:	DRAWN BY: PLW	
DATE: 06–07–16		REV. DATE:	REV.
CUSTOMER: TETRATECH	QUOTE NO.:63752.4–15 JOB NO.: SUBMITTAL	CODE# 004	DRAWING NUMBER: 40699 1/1

4. Slow Mixers

Chemineer

Model 20 HT and GT Agitators

Reliable Performance

and Value

Premium Performance

The Model 20 HT and GT units feature a gearbox designed specifically for agitator service. Available in right angle (HT) and parallel shaft (GT) configurations, this rugged performer can be tailored to meet virtually any process, from critical chemical reactor systems to storage applications.

Combining the benefits of the HT and GT time proven agitators into a modular design package, Chemineer provides solutions to optimize your mixing applications today and flexibility to handle your changing requirements in the future.

The Model 20 HT/GT is designed to meet AGMA, OSHA, ANSI, IEC, DIN, EU and ATEX standards and requirements.

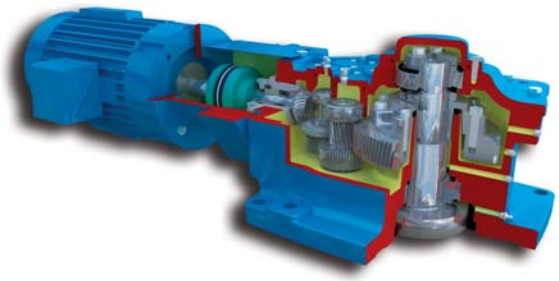

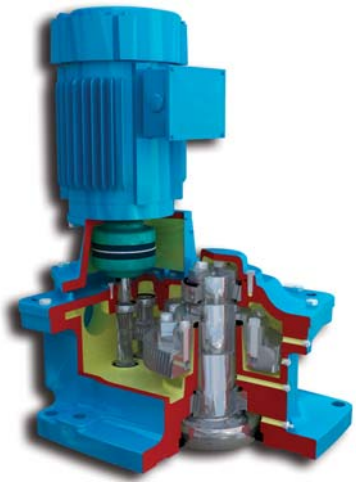

How is the Chemineer Model 20 HT/GT Gearbox Superior?

Output Shaft Requirements

Commercial gearboxes usually have smaller output shafts that are poorly suited for agitator duties, leading to higher gear deflections, more noise and lower reliability. For optimum mechanical integrity, it is beneficial to design the low speed shaft so that the shaft diameter between the bearings is large and the distance between the bearings is small. Commercial gearboxes tend to use smaller shaft diameters, resulting in the need to select larger and more expensive units to handle the bending moments associated with overhung loads.

AGMA Ratings when Applied to Agitators

AGMA established a general purpose standard intended to be applied to gearboxes used in a wide range of industrial applications. Agitators have particular duties that make reliance on AGMA service factors inappropriate. A standard commercial gearbox tends to use smaller shafts and larger bearing spans that result in higher deflection, wear and shorter lifespan. To obtain adequate drive life a high service factor must be applied.

The Chemineer Solution

The Chemineer Model 20 HT/GT gearbox is unique and superior because it is designed specifically for agitator duties. In comparison with a general purpose gear-drive of the same nominal AGMA torque rating, it has much longer bearing and gear lives, which translate to lower maintenance costs and greater productivity. It also has an oversized output shaft, which reduces gear deflection and noise, with a true dry well seal to avoid the risk of leaking lubricant down the shaft.

Drive Features and Benefits

Internal Shafting

Features	Benefits
• Oversized low speed shaft diameter and short bearing span	• Time proven design to handle shaft/impeller bending loads, reducing deflection and gear misalignment, thereby extending bearing and gear life
• Recessed low speed coupling half	• Simplifies installation with no requirement to install the extension shaft up through the gearbox

Gearing

Features	Benefits
• Double and triple reduction options	• Double/triple reduction decreases gear loads, lowers noise levels and allows for non-synthetic lubrication over competitive single reduction designs
• Helical/spiral bevel (HT) and all helical (GT)	• Most efficient gearing available; reduces energy costs
• Case carburized gearing	• Reduces wear rate for 20+ year service life
• Reverse rotation capability	• Available option for process flexibility

Housing and Lubrication

Features	Benefits
• Cast gearbox housing	• Modular design with right angle (HT) and parallel shaft (GT) configurations • Reduces noise level
• Dry well seal	• Eliminates lubrication leaks which are common in commercial gearboxes with no dry well
• Bath lubrication	• Ensures vital lubrication to gears and bearings at all operating speeds, eliminating internal/external lubrication pumps
• Standard R&O oils and grease	• No synthetic lubrication is required, saving installation and maintenance costs
• Extra seal over dry well	• Keeps oil out of dry well while moving gearbox

Bearing Design

Features	Benefits
• Tapered roller output bearings with short bearing span, grease lubricated	• High capacity to handle bending and thrust loads while providing long life
• Tapered roller/cylindrical roller bearings, oil lubricated	• Ensures cool operation, long life and low maintenance

Seal Features and Benefits

Features	Benefits
• Drop collar shaft support during seal change	• Shaft drops easily by loosening coupling bolts, and engages by tightening the coupling bolts • Shaft only drops 1/2" eliminating steady bearing disengagement
• Swing out or spacer spool seal change designs	• No need to pull shaft up through gearbox or in-tank shaft supports • No labor or parts required for special shaft support system • No lifting and removing of gearbox, saving labor and downtime
• Variety of seal options from major mechanical seal vendors such as John Crane, Flowserve, Chesterton and AES	• Off the shelf items from manufacturers are non-proprietary as compared to some competitive sealing systems, improving service and lowering maintenance costs
• Seal designs include cartridge single and double seals and split seals	• Reduces seal change out time and shaft wear as compared to non-cartridge (shaft mounted) designs
• Low height pedestal (swing out) and seal bearing (spacer spool) design options	• Seal located close to shaft support bearings (swing out) and integral seal bearing (spacer spool) reduces shaft deflections at seal, improving life
• Optional seal shut-off device	• Eliminates operator exposure to hazardous vapors without draining the vessel
• Jacks-n-Rails assembly available for large diameter seals	• Reduces labor time for seal change-out with no extra hoists required
• Optional lip seals and stuffing boxes	• Low cost lip seals available for low pressure applications • Self-lubricating packing offers low maintenance sealing options for pressures up to 100 psi

Swing Out Seal Change

Mounting Options

Open Tank

• Drive Mounted to Beams

Using a heavy-duty, cast housing capable of handling maximum loads, the agitator mounts readily to support beams or similar structures for common open tank applications.

• Pedestal-Mounted to Beams

The rugged, cast iron pedestal of the agitator raises the gear drive 10 inches away from the support structure to prevent exposure of the drive to the fluid and to facilitate service.

Closed Tank — Seal Options

• Lip Seal

The spring-loaded, nitrile rubber lip seal protects process fluid from contamination in lower pressure applications.

• Stuffing Box

The six-ring stuffing box utilizes standard PTFE/graphite-braided packing requiring no lubrication. Optional packing materials are available.

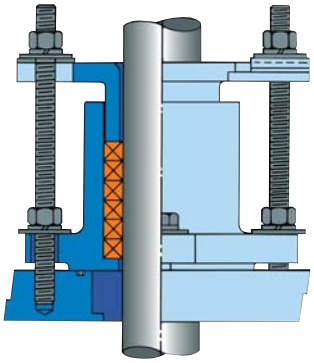

• Single Mechanical Seal

The single dry-running mechanical seal is the economical choice where a pressurized barrier between the tank contents and the outside environment is not necessary.

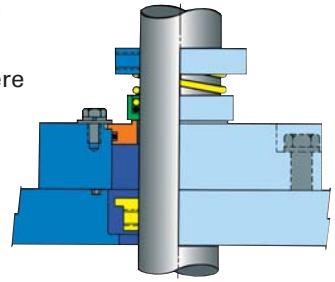

• Single Mechanical Cartridge Seal

The single mechanical seal offers dry-running capability with an easily replaceable cartridge.

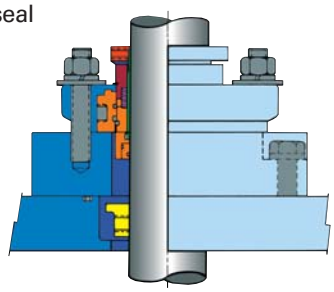

• Split Mechanical Seal

The two-piece design simplifies installation and maintenance.

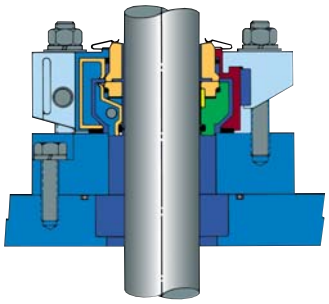

• Double Mechanical Cartridge Seal

Double mechanical cartridge seals offer excellent sealing capabilities, long life and minimum maintenance. An appropriate barrier fluid keeps tank contents in the tank.

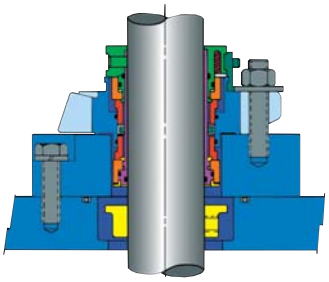

Shaft Design

Both process and mechanical considerations determine shaft design. Shafts are sized to resist torsional loads and bending moments induced by hydraulic forces acting on the impeller, as well as to avoid excessive vibration due to the coincidence of critical frequencies and operating speed.

Shafting is straightened to tight tolerances for long seal life and smooth operation – less than 0.003 inches total run out per foot of shaft length (0.25 mm per meter).

Custom couplings, impellers, shafts and steady bearings are available upon request, including sanitary designs.

Standard Spacer-Spool Style Pedestal and Seal Arrangement

Types

Shafting is supplied in a single piece design or in rigidly coupled sections for easy installation. For large diameter shafts, pipe shafting is a viable option with couplings and impeller hubs welded to the shafting. A wide range of materials and coating options are available.

Couplings

To facilitate assembly in the field, extension shafts are attached to the drive shaft with flanged rigid couplings, eliminating the need for shafts to be installed through the gearbox. Optional in-tank couplings can either be removable tapered bore or welded simplifying installation of long shafts.

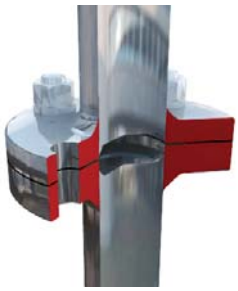

Welded Coupling

Removable Coupling

Steady Bearings

Steady bearings are available to help support extremely long shafts. Cup tripod, bracket and pad-type steady bearings are standard design options.

Extended Keyways

Extended keyways for adjusting impeller location offer process and design flexibility.

Cup Tripod Steady Bearing

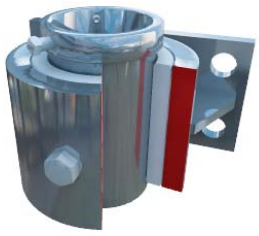

Bracket Steady Bearing

Impeller Technology

Chemineer's impeller technology is effectively applied across your spectrum of applications ensuring successful, repeatable results from lab scale to full scale operations.

Chemineer's mixing expertise includes high flow, low shear liquid-liquid agitation, solids suspension, gas dispersion, high shear blending and viscous mixing. Whether it is R&D or production phase, we have the expertise to solve your mixing challenges.

Impeller bulletin 710 is available with additional information.

SC-3

HE-3

XE-3

BT-6 Gas Dispersion

Maxflo W

Helix

P4 — Pitched Blade Turbine

Smoothline Maxflo W

Dimensions

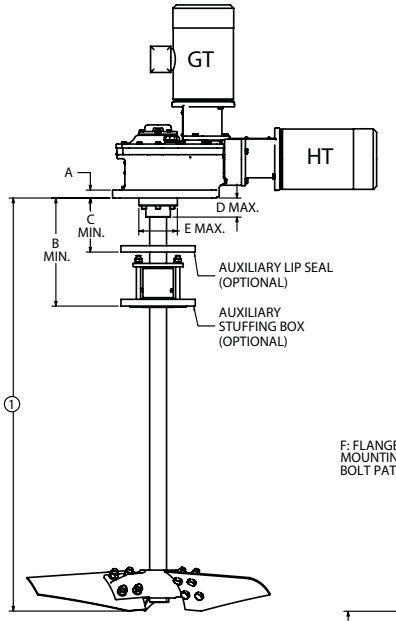

GT/HT D

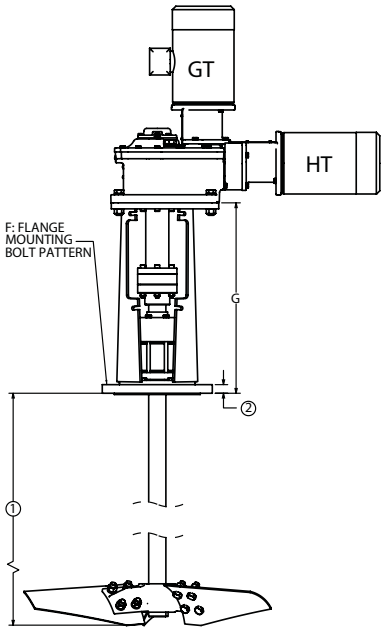

GT/HT N
Spacer Spool

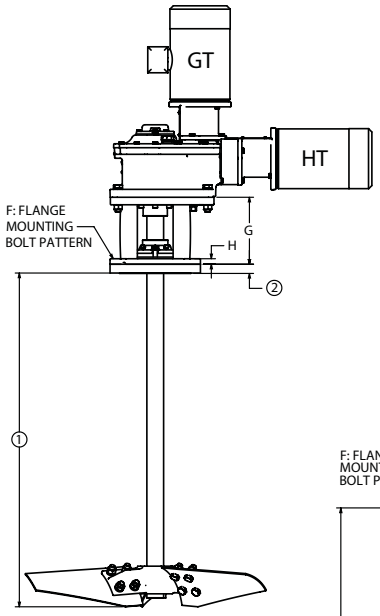

GT/HT A, L, N,
NC, NS & NT
(N, NC & NS
Drives Swivel)

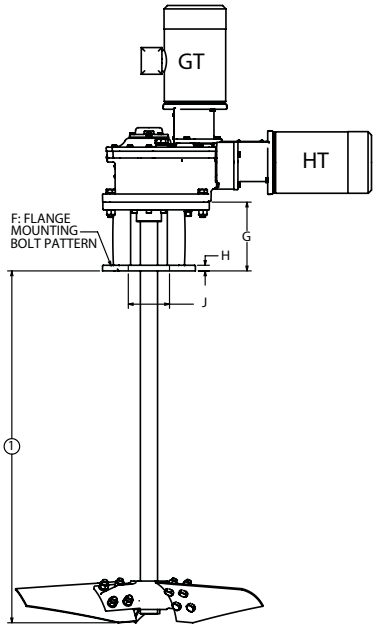

GT/HT P

Agitator Dimensions

CASE SIZE	A	B	C	D	E	F	G		H	J
						Bolt Pattern	Spacer	Swivel		
21GT	1.18	13.94	6.94	2.94	5.71	8" - 150# ANSI (Holes Straddle C.L.)	26.19	10.00	0.75	9.50
22GT	1.38	18.00	8.00	4.00	7.48	10" - 150# ANSI (Holes On Center Line)	29.82	12.50	0.88	10.00
23GT	1.58	18.63	8.63	4.63	9.45	12" - 150# ANSI (Holes Straddle C.L.)	33.94	14.06	1.18	10.83
21HT	1.18	13.94	6.94	2.94	5.71	8" - 150# ANSI (Holes Straddle C.L.)	26.19	10.00	0.75	9.50
22HT	1.38	18.00	8.00	4.00	7.48	10" - 150# ANSI (Holes On Center Line)	29.82	12.50	0.88	10.00
23HT	1.58	18.63	8.63	4.63	9.45	12" - 150# ANSI (Holes Straddle C.L.)	33.94	14.06	1.18	10.83

1. Agitator output speed, shaft diameter and extension, impeller design and other optional features to suit application
2. Alternate flange sizes are available

Dimensions

Swivel Dimensions

CASE SIZE	K	L
21GT	11.18	17.57
22GT	17.50	22.61
23GT	21.90	28.31
21HT	9.84	17.57
22HT	12.56	22.61
23HT	16.61	28.31

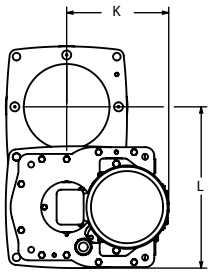

GT

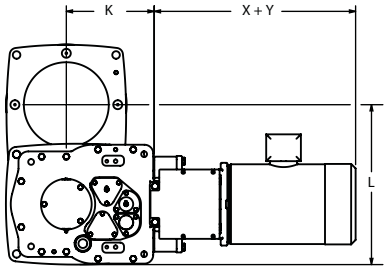

HT

Typical Drive Assembly
Swivel Dimensions
(Drive assembly pivots at top of pedestal to allow change-out of mechanical seals. See I.O.M. for special motor conduit instructions)

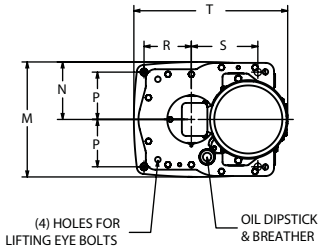

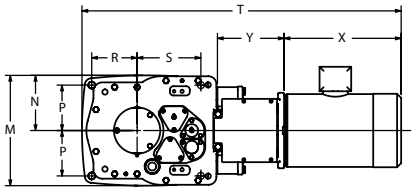

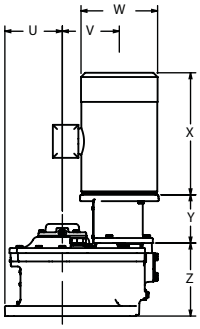

GT

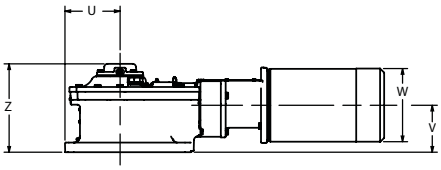

HT

Motor Dimensions

	FRAME SIZE	W	X	Y					
				21GT	22GT	23GT	21HT	22HT	23HT
NEMA	140	7.75	13.11	3.98	—	—	6.46	—	—
NEMA	180	9.25	16.24	5.51	6.02	—	7.99	9.41	—
NEMA	210	11.00	17.96	5.51	6.02	—	7.99	9.41	—
NEMA	250	12.75	22.25	—	6.85	7.01	—	10.24	11.43
NEMA	280	14.50	24.24	—	7.76	7.01	—	11.14	11.43
NEMA	320	16.88	27.00	—	8.23	8.27	—	11.61	12.69
NEMA	360	18.50	27.63	—	—	9.49	—	—	13.91
NEMA	400	20.88	31.75	—	—	10.83	—	—	15.25
IEC	80	6.61	10.66	3.58	—	—	6.06	—	—
IEC	90	7.40	11.18	4.13	—	—	6.62	—	—
IEC	100	7.72	13.15	4.92	5.35	—	7.40	8.74	—
IEC	112	9.45	13.03	4.92	5.35	—	7.40	8.74	—
IEC	132	10.16	16.73	5.39	6.22	6.10	7.88	9.61	10.52
IEC	160	12.52	21.26	—	7.87	7.48	—	11.26	11.90
IEC	180	14.37	23.31	—	7.87	7.48	—	11.26	11.90
IEC	225	17.64	30.51	—	—	9.53	—	—	13.95
IEC	250	20.00	35.04	—	—	9.53	—	—	13.95
IEC	280	22.17	38.39	—	—	9.53	—	—	13.95

Drive Assembly Dimensions

CASE SIZE	M	N	P	R	S	T	U	V	Z
21GT	12.77	6.45	5.56	5.56	7.81	17.91	6.73	6.69	8.47
22GT	16.97	8.48	7.06	7.06	10.06	26.00	8.50	9.06	10.75
23GT	21.97	10.99	9.65	7.68	2.17	31.15	9.25	11.41	14.80
21HT	12.77	6.45	5.56	5.56	7.81	38.75	6.73	5.75	10.83
22HT	16.97	8.48	7.06	7.06	10.06	59.70	8.50	7.23	12.91
23HT	21.97	10.99	9.65	7.68	2.17	73.47	9.25	9.77	16.50

Process & Mechanical Technology & Innovation

Chemineer brings proven technical expertise to each mixing solution, from basic mixer and impeller design through complex process application analysis. Combined with proprietary data evaluation methodology and extensive field experience, Chemineer provides the most accurate application evaluation possible. Let Chemineer optimize your application, saving you time and money, by applying our experience and state-of-the-art tools, such as:

- Chemineer's high-tech customer test lab–offers the most advanced testing techniques in the industry
- Computational Fluid Dynamics (CFD)–provides visual projections of mixer performance by generating a series of mathematical models of fluid flows (see Bulletin 750)
- Digital Particle Image Velocimetry (DPIV)–provides instantaneous flow visualization and quantitative measurement of the fluid velocity field (see Bulletin 755)
- Laser Doppler Anemometry (LDA)–corroborates time averaged DPIV data, especially for velocity fields in the vicinity of the impeller
- Laser Induced Fluorescence (LIF)–enables the user to gain a fundamental understanding of mixing by tracking the path and diffusion of injectants in agitated vessels and static mixers
- CEDS® (Chemineer Expert Design System)–the industry leader in agitator design and analysis software. This proprietary program suite optimizes process performance, in addition to mechanical integrity, strength and reliability
- ChemScale®–the industry standard method for effective mixer selection that helps to optimize the agitator design for your specific process needs
- Finite Element Analysis (FEA)–dynamic vibrational and stress analysis of vessel and agitator support structures ensures proper design to handle agitator loads. Product design tool for stress and deformation analysis ensures product safety and reliability
- CAD 3-D Design–state of the art product and job design software, with customer specific mixer drawings available
- A library of Chemineer technical articles–available on the web site at www.chemineer.com/techarticles.php

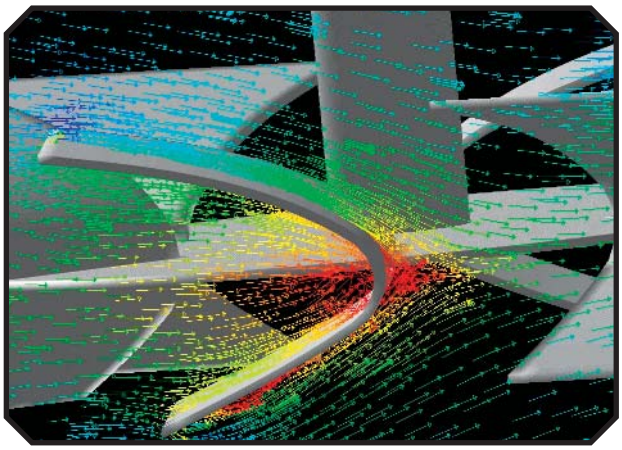

Example of CFD Modeled Flow Fields

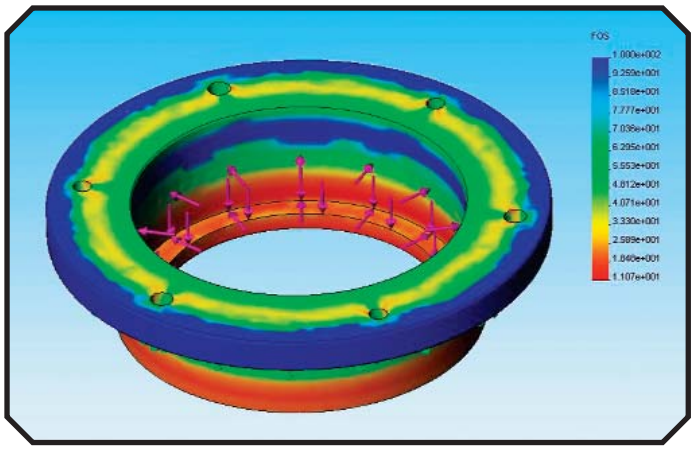

Example of FEA Analysis

Aftermarket & Technical Support

Quality Assurance

At Chemineer, quality is more than a mission, it's the foundation of our business. Design and manufacturing of parts are the building blocks of the foundation ... the toughest, most dependable components available in the industry. Utilizing Chemineer replacement parts lets you take advantage of today's technology to extend the service life of your mixing equipment.

Sales

Chemineer's extensive network of factory trained field sales representatives and in-house application engineers are on call, ready to assist you with all of your agitation needs, including installation, maintenance and modifications.

Installation

Chemineer offers expert help on installation, whether your application requires one or multiple agitators. Our sales and field service engineers can quickly and efficiently supervise the installation and start-up of your agitator.

Maintenance

Chemineer engineers can provide seminars to thoroughly review procedures recommended for installation, operation and maintenance of your agitators. We can help make your maintenance tasks easier and more efficient.

Troubleshooting

Chemineer engineers are available for troubleshooting your Model 20 HT/GT. Through years of experience and technical expertise, the engineer can pinpoint problems quickly, saving you downtime and labor.

Parts

Our large inventory supports your stock and provides quick fulfillment of maintenance and repair needs. Emergency parts are shipped from our stock within 24 hours. In addition to a wide selection of standard replacement items such as bearings, seals and motors, we stock complete drives and internal subassemblies. Our drive exchange program offers a replacement drive for rapid conversion.

Warranty

For added peace of mind the Model 20 HT/GT agitator is backed by a comprehensive two-year product warranty.

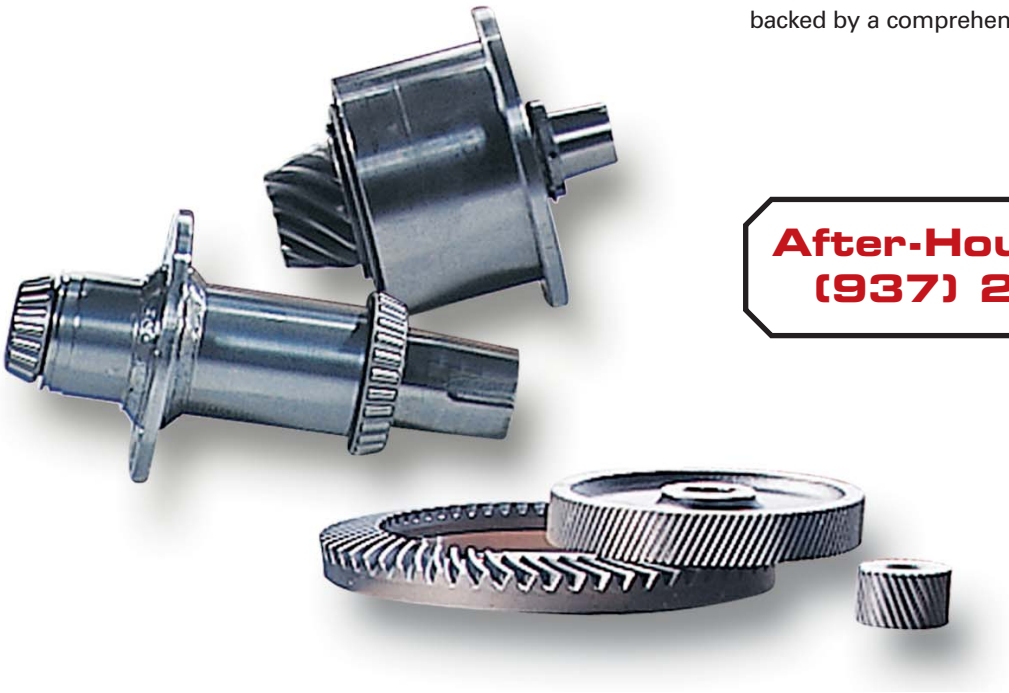

After-Hours Hotline:
(937) 229-8756

ROBBINS & MYERS
PROCESS SOLUTIONS GROUP

Chemineer, Inc. is part of the family of businesses that comprise the Process Solutions Group of Robbins & Myers, Inc. The Process Solutions Group is the most effective, single-source, integrated global provider of innovative process solutions for the CPI, pharmaceutical and numerous other markets. The group brings together its global engineering, manufacturing and application expertise to develop tailored system solutions for its customers that deliver field-proven performance advantages in the most critical applications. Applying its proprietary engineering technology tools, best in class manufacturing cost structure, multi-disciplinary engineering resources and project management expertise, the Process Solutions Group ensures effective process solutions and system integrity.

The Process Solutions Group, headquartered in Rochester, New York, is a global organization with manufacturing facilities in nine countries. The group markets its glass-lined vessels, wiped film evaporators, dynamic and static mixers, heat exchangers and fluoropolymer products globally under industry-leading brand names such as: Pfaudler®, TyconTechnoglass®, Chemineer®, Prochem®, Kenics®, Greerco® and Edlon®.

The Process Solutions Group's parent company, Robbins & Myers, Inc., is a leading supplier of highly-engineered, critical equipment and systems for global energy, industrial, municipal, chemical and pharmaceutical markets. Robbins & Myers provides innovative products, application engineering expertise, customer support and a competitive cost structure that create value for its customers.

Chemineer

Chemineer, Inc.
P.O. Box 1123
Dayton, Ohio 45401
Telephone: (937) 454-3200
Fax: (937) 454-3379
www.chemineer.com

Chemineer, Ltd.
7 Cranmer Road
West Meadows
Derby DE21 6XT
England
Telephone: 44-1332-363175
Fax: 44-1332-290323

Kenics
Greerco

Chemineer, Inc.
125 Flagship Drive
North Andover, MA 01845
Telephone: (978) 687-0101
Fax: (978) 687-8500
www.kenics.com
www.greercomixers.com

Chemineer International Sales Offices:
Canada
Mexico
Singapore
China
India

Your Local Contact:

Bulletin 705

For the nearest sales office call 1-800-643-0641 or go to www.chemineer.com

© 2007 by Chemineer, Inc.
® Chemineer, Prochem, Greerco, Kenics, CEDS and ChemScale are registered trademarks of Chemineer, Inc.
® Pfaudler, TyconTechnoglass and Edlon are registered trademarks of Robbins & Myers, Inc.

Printed in U.S.A.
3M PPI 507

Quotation

NOV Process & Flow Technologies US, Inc.
Chemineer™|Kenics™
5870 Poe Avenue
P.O. Box 1123
Dayton, OH 45401-1123
Phone: (937) 454-3200
Fax: (937) 454-3379
E-mail: ChemineerSales@nov.com

Representative:
Carl Eric Johnson Co.
605 Lakemont Court
Roswell, GA 30075
USA

Attn: Roger Beggs
Phone: 770-993-0761
Mobile: 404-375-3149
Email: rbeggs@cejco.net

Quotation Number: 175WDER15

Date Issued: 3/30/2016

Customer:
Brenda Keenan
Environmental Engineer
Tetra Tech
Suite 1000
201 East Pine Street
Orlando, FL 32801
USA
Email: Brenda.Keenan@TetraTech.com
Business Number: 407-480-3790

Terms: Net 30 Days
Warranty: Standard

FOB: Dayton
Freight: P.P.A.
Ship Via: Best Way

Item	Name	Description	Unit	Qty	Extended
1	Flocculation Tank Mixers	CHEMINEER AGITATOR Model: 21GTP-1.5 Ref: Flocculation Tank Mixers / 3-30-16	$15,292	2	$30,584
2	Rapid Mixers	CHEMINEER AGITATOR Model: 21GTP-7.5 Ref: 3-30-16	$12,840	2	$25,679
				TOTAL	$56,263

Currency: USD

Shipment: 5 Weeks ARAD

Please issue purchase order to 'NOV Process & Flow Technologies US, Inc.'

Notes:

NOV accepts no responsibility for the compatibility of its products and the materials used in the construction thereof with Customer's process. Compatibility of the products and materials with Customer's process shall be determined by Customer, and NOV disclaims all liability concerning compatibility.

NOV PROCESS & FLOW TECHNOLOGIES US, INC. AND ITS AFFILIATES TERMS AND CONDITIONS FOR THE PROVISION OF EQUIPMENT, PARTS, SERVICES, OR RENTAL APPLY TO THIS QUOTE.

CHEMINEER™ AGITATOR DATASHEET

Mixer Ref:	**Flocculation Tank Mixers / 3-30-16**
Printed By:	**RBEGGS1 30-Mar-2016 02:12PM**
Software:	**CEDS.NET AgSolver 0.5.5.147**

Model No.:	**21GTP-1.5**	Shipping Weight:	**899.8 lb**
Type of Application:	**Unspecified**	Design Conditions:	**0.0 PSIG at 72.0 °F**
Industry:	**Unspecified**	Hazardous Area:	**No**

TANK DETAILS

Tank Configuration:	**Rectangular**
Tank Size:	**156.0 in x 156.0 in**
Straight Side:	**199.0 in**
Top Shape:	**Open**
Bottom Shape:	**Flat**
No. Baffles:	**None**
Baffles Width:	
Baffles Wall Clearance:	
Baffles Height:	
Agitator Orientation:	**Vertical, on-center**
Agit. Mounting Surface:	**Flat Structure or Beams**
Agit. Mounting Height:	**0.0 in above tank top**

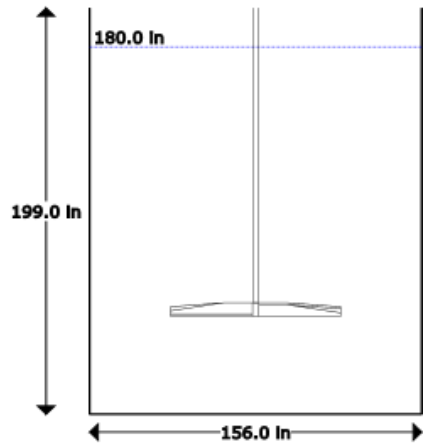

DRIVE CONFIGURATION

Type and Options:	**Gear Drive; Nominal Speed: 25 RPM; Rotation Direction: Clockwise; Variable Speed: Yes; Turndown Limit: 2:1; Paint: Sherwin-Williams Polane HS Plus**
Motor:	**Power: 1.5 HP; Speed: 1200 RPM; Frame: NEMA 182TC; Supply: AC; Voltage: 230/460V; Phase: 3 Ph; Frequency: 60 Hz; Efficiency: Premium; Service Duty: Severe; Enclosure: TEFC; Service Factor: 1.15+; Max. Ambient: 104.0 °F; Mounting: CFACE**
Gearbox:	**Type: Chemineer 20GT; Size: #21; Lubricant: Oil (R&O); Dipstick: Yes; Service Rating: Class III**
Shaft-Tank Seal:	**None**
Drive Mounting:	**Type: Pedestal; Fixing Plate: Included**

WETTED PARTS CONFIGURATION

Shaft Diameter:	**2 in**	Material:	**316SS**
Fasteners:	**Lock-washer and nut**	Finish:	**Chemineer standard**

Station:	Location from Mounting:	Diameter:	Pumping Direction:	Options:
Impeller, HE-3	**151.0 in**	**80.00 in**	**Down**	**Hub Attachment: Keyed to shaft; Blade Attachment: Bolted to hub**

PROCESS DATA

Process Stage:	Level:	Volume:	Pressure:	Temp.:	Viscosity:	SG:
Stage 1	**180.0 in**	**18,963 gal**	**0.0 PSIG**	**72.0 °F**	**1.0 cp**	**1**

MIXER PERFORMANCE

Process Stage:	ChemScale:	Pumping:	Blend Time:	Uniformity:	G-Value:	Flow:
Stage 1	**3.14**	**24,141 gpm**	**460 s**	**0.99**	**97.0 1/s**	**Turbulent**

EQUIPMENT MOUNTING LOADS

Static Weight:	**749.8 lb**
Bending Moment:	**498 ft·lb**
Torque Reaction:	**809 ft·lb**

NO.	DATE	REVISION	BY	OCN#

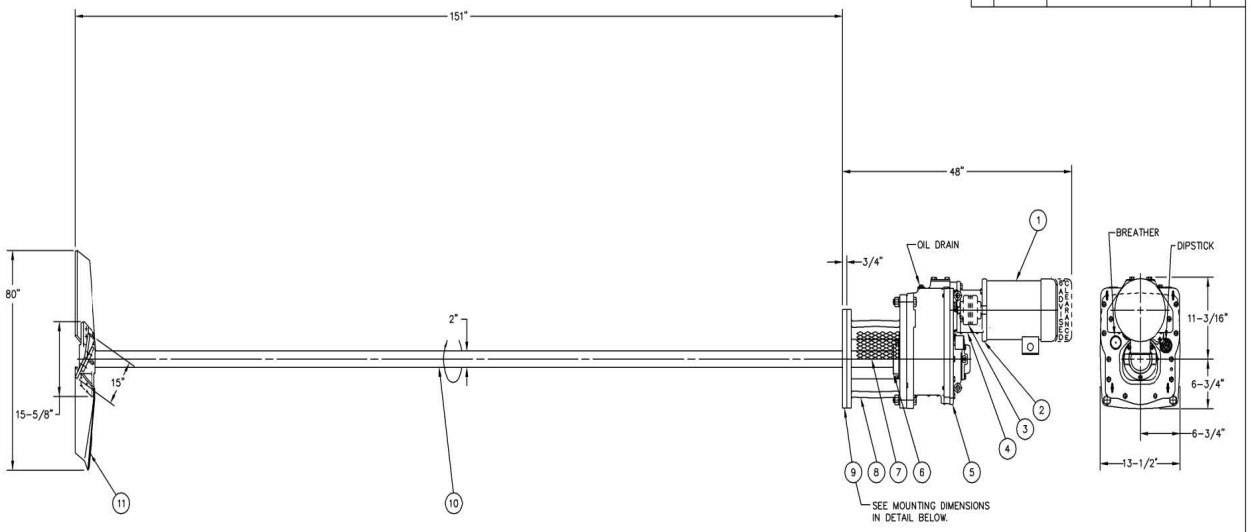

CAUTION:
DO NOT OPERATE IN REVERSE.
UNIT TO BE OPERATED BY VARIABLE SPEED CONTROL SUPPLIED BY OTHERS. DO NOT OPERATE OUTSIDE THE FOLLOWING LIMITS.
MAXIMUM OPERATING RPM:
AGITATOR SHAFT; 25 RPM.
MOTOR SHAFT; 1200 RPM.
MINIMUM OPERATING RPM:
AGITATOR SHAFT; 12.5 RPM.
MOTOR SHAFT; 600 RPM.

PROPOSAL ONLY

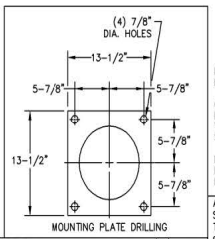

MOUNTING PLATE DRILLING

NOTICE: This document contains National Oilwell Varco (NOV) proprietary and confidential information protected by applicable laws. It may only be used in accordance with the terms and conditions, license, or other contractual agreement under which it was released or provided by NOV. No reproduction, in whole or in part, distribution, publication, release, or other uses are permitted or authorized without express written authorization from NOV. NOV retains all ownership and intellectual property rights relating to this work and intends to enforce its rights under applicable laws. This document is to be returned to NOV upon request. © 2015 National Oilwell Varco. All rights reserved

MOTOR IS FURNISHED BY CHEMINEER MOUNTED BY THE CUSTOMER.

CHEMINEER WILL SUPPLY, AT ITS DISCRETION, 316SS WETTED PARTS WHEN CARBON STEEL OR 304SS IS SPECIFIED.

FOR AGITATOR DETAILS SEE INSTALLATION, OPERATION, AND MAINTENANCE MANUAL 702 AND 713

AGITATOR SUPPORT STRUCTURE SHOULD BE DESIGNED TO WITHSTAND THE FOLLOWING LOADS.
STATIC WEIGHT: 750 LBS
BENDING MOMENT: 498 FT-LBS
TORQUE REACTION: 809 FT-LBS

SHIPPING WEIGHT: 900 LBS
CERTIFIED BY _____ DATE _____

MOTOR DATA	
H.P. 1.50	RPM 1200
PHASE 3 HZ. 60	VOLTS 230/460
ENCLOSURE TEFC	FRAME 182TC
HI EFF. CHEM	DUTY 1.15 S.F.
CHEMINEER QUOTE # 175WDER15/A1	
CUSTOMER EQ.# -----	
QUANTITY 1	
UNIT RPM 25-12.5	
SERVICE RATING CLASS III	

NOV / Chemineer™

MODEL 21GTP-1.5

FOR: TETRA TECH

DRAWING NUMBER		REV.	
175DER15A1-A01	AGS5.6 03/30/16	0	C

NO.	DESCRIPTION	QUAN	MAT'L / TYPE
11	IMPELLER, (3) PITCHED BOLTED BLADES TYPE HE-3, KEYED TO THE SHAFT.	1	316SS
10	EXTENSION SHAFT	1	316SS
9	MOUNTING PLATE	1	STEEL
8	PEDESTAL	1	CAST IRON
7	HANDHOLE COVERS	4	COVERED CS
6	LOW SPEED COUPLING	1	STEEL
5	GEAR DRIVE, 21GT, N21048-931L	1	CHEMINEER
4	COUPLING GUARD	1	304SS
3	FLEXIBLE COUPLING, MODEL: SUREFLEX SIZE: 6S	1	WOODS
2	MOTOR ADAPTER	1	CAST IRON
1	MOTOR, W/ DRIP COVER	1	-----

Recommended Spare Parts For Chemineer Quote # 175WDER15/A1

Part Number	Description	Qty	Material	Price (USD)
Z05106-001J	FLEXIBLE COUPLING INSERT IOM# 713 Item # 112	1.00	EPDM	$74.00

NOV PROCESS & FLOW TECHNOLOGIES US, INC., AND ITS AFFILIATES
TERMS AND CONDITIONS FOR THE PROVISION OF EQUIPMENT, PARTS, SERVICES OR RENTAL

1. ACCEPTANCE

Orders or other requests, whether oral or written, for the supply or sale of machinery or equipment ("Equipment"), or for the supply or sale of spare or replacement parts ("Parts"), or for the provision of services ("Services"), or for the rental of machinery or equipment ("Rental") to be provided by **NOV Process & Flow Technologies US, Inc.,** on behalf of itself and its divisions and subsidiaries, or by its affiliates ("Seller") to its customers (each a "Buyer") (the "Order(s)") are subject to Seller's written acceptance by an authorized representative of Seller and any Orders so accepted will be governed by (a) the terms and conditions stated in these Terms and Conditions for provision of Equipment, Parts, Services or Rental (the "Terms and Conditions"); (b) the written proposal submitted by Seller to Buyer ("Proposal"), if any; (c) the written order acknowledgment issued by Seller to Buyer ("Acknowledgment"), if any; and, (d) any change orders identified as such and agreed to in writing by Seller (the Order, Terms and Conditions, Proposal, Acknowledgment, and any such change order, and any such additional terms as agreed to in writing by an authorized representative of Seller collectively referred to herein as the "Agreement"). Buyer's submission of a purchase order (or other similar document) shall be deemed to be an express acceptance of these Terms and Conditions notwithstanding language in Buyer's purchase order (or other similar document) inconsistent herewith, and any inconsistent language in Buyer's purchase order (or other similar document) is hereby rejected. Buyer's purchase order (or other similar document) is incorporated in this Agreement, only to the extent of specifying the nature and description of the Equipment, Parts, Services or Rental and then only to the extent consistent with the Proposal or Acknowledgment. In the event of any conflict between a Proposal and an Acknowledgement, the Acknowledgment shall prevail.

2. PRICES

Prices of Equipment, Parts, Services or Rental shall be as stated in the Proposal or Acknowledgment, or if there is no Proposal or Acknowledgment, as otherwise agreed to in writing by Seller. Unless otherwise specified, all prices contained in a Proposal are valid for thirty (30) days from date of issue of the Proposal. All price quotations are EXW Seller's premises (INCOTERMS 2010), or as agreed per the Proposal or Acknowledgement and are subject to change without notice. Seller bears no responsibility for any consular fees, fees for legalizing invoices, certificates of origin, stamping bills of lading, or other charges required by the laws of any country of destination, or any fines, penalties or interest imposed due to incorrect declarations. Charges will be added for factory preparation and packaging for shipment. Minimum freight and invoice charges in effect at the time of the Order shall apply. If by reason of any act of government, the cost to Seller of performing its obligations hereunder is increased, such increase shall be added to the quoted price.

3. TAXES

Transaction Taxes. In addition to the charges due under this Agreement, the Buyer shall be responsible for, and shall protect, indemnify, defend and save harmless Seller from and against the reporting, filing and payment of any taxes, duties, charges, licenses, or fees (and any related fines, penalties or interest and the like) imposed directly on Buyer as a result of this Agreement and all liabilities, costs, and associated expenses (including lawyers' and experts' fees) which may be incurred in connection therewith. Such taxes, duties, charges, licenses, or fees include but are not limited to any local, state, federal, foreign, or international sales, use, value added tax ("VAT"), goods and services tax ("GST"), rental, import, export, personal property, stamp, excise and like taxes and duties. If Seller pays any such tax, Buyer shall, within thirty (30) days of Seller's demand, reimburse Seller for the tax including interest, fines, and penalties, paid by the Seller. It shall be Buyer's sole obligation after payment to Seller to challenge the applicability of any tax.

Notwithstanding the foregoing, the Buyer shall provide Seller with a copy of all exporting documents and any other documents reasonably requested by Seller to prove or substantiate to the appropriate tax authorities the goods were timely exported.

Withholding Taxes. If Buyer is required by any appropriate government department or agency to withhold compensation due Seller to satisfy any obligation of Seller for taxes due, Buyer shall give at least 30 days' notice to Seller that Buyer will withhold. Buyer agrees to pay on a timely basis the amounts so withheld over to the appropriate government department or agency, on behalf of Seller, and to provide Seller with any tax receipts (originals, if possible) or other reliable evidence of payment issued by such government department or agency within 30 days of the date required for withholding. Buyer shall not withhold compensation due Seller if Seller produces evidence, acceptable to Buyer, that Seller is not subject to the withholding of such taxes. Buyer agrees that it shall not unreasonably withhold such acceptance. Buyer shall reimburse Seller for any taxes withheld for which receipts or other reliable evidence substantiating the remittance of taxes to the appropriate government department or agency are not provided to Seller. Buyer's obligation to deliver to Seller tax receipts or other reliable evidence issued by the taxing authority shall not apply if Buyer establishes to the reasonable satisfaction of Seller that the appropriate government department or agency does not provide such documentation. Notwithstanding the above, if Buyer is required to pay any such taxes or amounts that Buyer believes is directly attributable to Seller, Buyer shall first provide notice to Seller and give Seller an opportunity to intervene to protect its interest before Buyer makes any payment.

Protest Rights. If the Buyer receives any demand or request for payment of any levies, charges, taxes or contributions for which it would seek indemnity or reimbursement from Seller, Buyer shall promptly and timely notify the Seller in writing of such demand or request. "Promptly and timely" as used in this sub clause means that Buyer must notify Seller so that Seller has enough time and a reasonable opportunity to appeal, protest or litigate the levies, charges, taxes or contributions in an appropriate venue. To the extent that Buyer fails to give prompt and timely notice, Seller has no obligation to, and will not, reimburse Buyer for these levies, charges, taxes or contributions. At Seller's request and cost, Buyer shall initiate an appeal, protest or litigation in Buyer's own name if Buyer is the only party that can legally initiate this appeal, protest or litigation. The Buyer shall allow the Seller to control the response to such demand or request and the Buyer shall use its best efforts to appeal against such demand or request. If Buyer is required to pay any levies, charges, taxes or contributions in order to pursue an appeal, protest or litigation, Seller shall reimburse Buyer for that amount promptly upon receipt of a written request from Buyer. Seller shall not be responsible for any compromise made by Buyer without Seller's prior written consent.

Cooperation. Buyer shall cooperate with Seller, and at the request of Seller, Buyer shall use its best efforts to supply to Seller such information (including documentary information) in connection with its activities as may be required by Seller for any of the following purposes:

a) To enable Seller to comply with the lawful demand or requirement for such information by any appropriate government authority or to ensure that all requirements of the applicable law are being complied with;
b) To enable Seller to conduct, defend, negotiate or settle any claim arising out of, or in connection with, such activities, whether or not such claim shall have become the subject of arbitration or judicial proceedings;
c) To enable Seller to make any application (including, but without limitation, any claim for any allowances or relief) or representation in connection with, or to contest any assessment on, or liability of Seller to any taxes, duties, levies, charges and contributions (and any interest or penalties thereon); or
d) To secure for Seller any beneficial tax treatment and legally minimize any tax obligations in connection with this Agreement.

Seller's request for such information and documents shall allow Buyer a reasonable time to prepare, provide and submit that information requested. The obligations set forth above shall exist for a period of six (6) years commencing with the date of agreement by Buyer of Seller's final statement of account under the Agreement, and the Buyer shall retain and shall procure any subcontractor hereunder to retain, all information and documents in connection with its activities under or pursuant to the Agreement as shall enable the Buyer to comply with the above obligations.

4. PAYMENT TERMS

Unless alternate payment terms are specified and agreed to by Seller in writing, all charges, including applicable packing and transportation costs, billed by Seller are payable within net 30 days of the date of invoice. Seller reserves the right to modify or withdraw credit terms at any time without notice. Unless otherwise specified, all payments are due in the currency specified in Seller's Proposal, Acknowledgment and/or invoice. Interest shall be due from Buyer to Seller on overdue accounts at the maximum rate allowed by law. When partial shipments are made, the goods will be invoiced as shipped and each invoice will be treated as a separate account and be payable accordingly. Payment for goods is due whether or not technical documentation and/or any third party certifications are complete at the time of shipment. Seller shall be entitled to recover all reasonable attorneys' fees and other costs incurred in the collection of overdue accounts. Seller reserves the right, where a genuine doubt exists as to Buyer's financial position or if Buyer is in default of any payment obligation, to suspend delivery or performance of any Agreement or any part thereof without liability and without prejudice to, and without limitation of, any other remedy available to Seller until Buyer cures the default or satisfactory security for payment has been provided. Seller shall have the option to extend the delivery date by a time at least equal to the period of such suspension. In the event of Rental, should Buyer default in meeting any of the terms hereunder for any reason, Seller has the right to retrieve all Rentals as detailed in the Proposal and also to collect rental payments due. If Buyer elects to exercise a purchase option for Rental equipment, rental charges will be incurred and will be invoiced until the later of; (i) the end of the agreed rental period; or (ii) 30 days prior to the receipt of total purchase price and all other rental amounts due.

5. DELIVERY

Unless otherwise agreed to by Seller in writing, delivery terms shall be EXW Seller's premises (INCOTERMS 2010), except to the extent modified by these Terms and Conditions. Where goods are to be supplied from stock, such supply is subject to availability of stocks at the date of delivery. Partial shipments may be made as agreed to by Buyer and Seller. Stated delivery dates are approximate only and cannot be guaranteed. Seller shall have no liability for damages arising out of the failure to keep a projected delivery date, irrespective of the length of the delay. In the event Buyer is unable to accept delivery of goods when tendered, Seller may, at its option, arrange for storage of the goods at Buyer's sole risk and Buyer shall be liable to Seller for the reasonable cost of such storage. This provision is without prejudice to any other rights which Seller may have with respect to Buyer's failure to take delivery of goods, which includes the right to invoice Buyer for the goods. Buyer agrees that title to the stored goods will transfer to Buyer upon invoicing notwithstanding Buyer's inability to accept delivery and that Buyer assumes all risk of loss or damage to the goods from the date title passes to Buyer. Buyer is responsible for all shipping costs from Seller's premises to the location as designated by the Buyer. All shipping costs for the return of goods from the location specified by Buyer to Seller's premises shall also be for Buyer's account.

6. FORCE MAJEURE

If either party is unable by reason of Force Majeure to carry out any of its obligations under this Agreement, other than the obligations to pay money when due and indemnification obligations assumed hereunder, then on such party giving notice and particulars in writing to the other party within a reasonable time after the occurrence of the cause relied upon, such obligations shall be suspended. "Force Majeure" shall include acts of God, laws and regulations, government action, war, civil disturbances, strikes and labor problems, delays of vendors, carriers, lightening, fire, flood, washout, storm, breakage or accident to equipment or machinery, shortage of raw materials, and any other causes that are not reasonably within the control of the party so affected. Seller shall be paid its applicable standby rate, if any, during any such Force Majeure event.

7. CANCELLATION

Orders placed by Buyer and accepted by Seller may be canceled only with the consent of Seller and will subject Buyer to cancellation charges. All of Seller's documents, drawings and like information shall be returned to Seller upon Buyer's request for cancellation. No Orders may be canceled subsequent to delivery or shipment, whichever occurs earlier. As estimated actual damages, Buyer agrees to pay Seller the greater of Seller's actual costs incurred prior to cancellation plus a reasonable profit, or the following minimum cancellation charges:

a) 20% of Agreement value if canceled 30 or more days prior to the original delivery/shipment date;
b) 50% of the Agreement value if canceled thereafter; or
c) 100% of the value of any non-standard items (which are items not built for stock or built to customer specifications).

In the event of Rental, minimum rental charges as stated in the Proposal will apply. Buyer shall verify the amount of the cancellation charges prior to canceling an order.

8. TITLE AND RISK OF LOSS

For purchased goods, ownership and risk of loss pass to Buyer upon the earlier of (a) Seller's delivery of the goods, or (b) invoicing by Seller for the goods where Buyer is unable to accept delivery on the scheduled date. Seller retains a security interest in the goods until the purchase price has been paid, and Buyer agrees to perform upon request all acts required to secure Seller's interest. Seller accepts no responsibility for any damage, shortage or loss in transit. Seller will attempt to pack or prepare all shipments so that they will not break, rust or deteriorate in shipment, but Seller does not guarantee against such damage. Claims for any damage, shortage or loss in transit must be made by Buyer on the carrier.

In the event of Rental, Buyer assumes all risk and liability whether or not covered by insurance, for loss or damage to the Rental machinery or equipment. Risk and liability passes to Buyer upon delivery by Seller. Title to Rental machinery or equipment shall remain with Seller at all times. Buyer acquires no ownership, title or property rights to the Rental machinery or equipment except the right to use the Rental machinery or equipment subject to the terms of this Agreement.

9. LIMITED WARRANTY

New Equipment/Parts. In the case of the purchase of new Equipment/Parts, and solely for the benefit of the original user, Seller warrants, for a period of eighteen (18) months from delivery or twelve (12) months from installation, whichever is earlier, that new Equipment/Parts of its own manufacture shall conform to the material and technical specifications set forth in the Agreement. Goods manufactured by others are sold "as is" except to the extent the manufacturer honors any applicable warranty made by the manufacturer. Secondhand goods are sold "as is". If the new Equipment/Parts fail to conform with such specifications upon inspection by Seller, Seller will, at its option and as Buyer's sole remedy, either repair or replace such defective Equipment/Parts with the type originally furnished.

Remanufactured to "As New" Equipment/Parts. Seller warrants to Buyer, that for a period of six (6) months from the date of delivery by Seller or installation of the Equipment/Parts, whichever is earlier, that reconditioned to "as new" Equipment/Parts will be free from defects in material and workmanship. If the reconditioned to "as new" Equipment/Parts fail to conform with such warranty upon inspection by Seller, Seller will, at its option and as Buyer's sole remedy, either repair or replace such defective Equipment/Parts with the type originally furnished.

Overhauled Equipment/Parts. Seller warrants that for a period of four (4) months from the date of delivery by Seller or three (3) months from installation, whichever is earlier, that overhauled Equipment/Parts will be free from defects in workmanship. If the overhauled Equipment/Parts fail to conform with such warranty upon inspection by Seller, Seller will, at its option and as Buyer's sole remedy, either repair or replace such defective Equipment/Parts with the type originally furnished. This warranty expressly assumes that parts normally considered consumables (including, but not limited to rubber goods, seals (rubber, polymer and/or metallic) and/or bearings, are replaced during overhaul. If Buyer requests that such parts not be replaced, Seller hereby disclaims any warranty for said overhauled Equipment/Parts.

Service. Seller warrants that the Services to be provided pursuant to this Agreement shall conform to the material aspects of the specifications set forth in the Agreement. Seller shall re-perform that part of the non-conforming Services, provided Seller is notified by Buyer prior to Seller's departure from the worksite.

Rental. Seller warrants that the Rental equipment to be provided pursuant to this Agreement shall conform to the material aspects of the specifications set forth in the Agreement. Provided Seller is notified by Buyer prior to Seller's departure from the worksite, Seller shall repair or replace non-conforming Rental equipment. In the event of failure or other non-performance of Seller's Rental equipment's contributing to loss of hole, rental rates will apply during re-drill to equivalent TD.

Seller's warranty obligations hereunder shall not apply if non-conformity or failure was caused by (a) Buyer's failure to properly store or maintain the equipment or parts; (b) the unauthorized modification, repair or service of the equipment or parts by Buyer; (c) utilization of replacement parts not manufactured by Seller; or (d) use or handling of the equipment by Buyer in a manner inconsistent with Seller's recommendations. Further, Seller's warranty obligations under this Article 9 shall terminate if (a) Buyer fails to perform its obligations under this or any other Agreement between the parties, or (b) if Buyer fails to pay any charges due Seller. Any third party warranties provided on equipment or parts not manufactured by Seller are assigned to Buyer, without recourse, at the time of delivery, provided such warranties are assignable.

THIS ARTICLE 9 SETS FORTH BUYER'S SOLE REMEDY AND SELLER'S EXCLUSIVE OBLIGATION WITH REGARD TO NON-CONFORMING EQUIPMENT, PARTS, SERVICES OR RENTAL. EXCEPT AS OTHERWISE EXPRESSLY PROVIDED PURSUANT TO THE PROVISIONS OF THIS ARTICLE 9, SELLER MAKES NO OTHER WARRANTIES OR REPRESENTATIONS OF ANY KIND, EXPRESS OR IMPLIED, AND SELLER DISCLAIMS THE IMPLIED WARRANTIES OF MERCHANTIBILITY AND FITNESS FOR A PARTICULAR PURPOSE.

10. CHANGES

Seller expressly reserves the right to change, discontinue or modify the design and manufacture of its products without obligation to furnish, retrofit or install products previously or subsequently sold.

11. RETURN OF MAKE TO STOCK GOODS

With Seller's written approval, unused, incorrectly shipped or "Made to Stock" goods ordered incorrectly, in new condition and of current manufacture and catalog specifications may be returned by Buyer for credit (subject to a restocking fee), provided written request is received within one (1) year after the purchase date. Non-standard goods are not returnable for credit and such goods shall only be accepted for return with the prior written agreement of Seller. Requests for return of goods must show the original purchase order number, invoice number, description of material, and date of purchase. Return of goods does not relieve Buyer of the obligation to make payment against Seller's invoice, and any credit or refund allowed will be issued following Seller's receipt of the goods. The credit allowed on returned goods, if any, is a merchandise credit and is applicable only against future purchases of Seller goods. The credit given will be solely in Seller's discretion and may be based on the original or a subsequently adjusted price. A charge will be assessed to clean-up, refinish and restock the goods, if applicable. No rubber or electronic products or components may be returned for credit after six (6) months from date of purchase.

12. LIABILITIES, RELEASES AND INDEMNIFICATION

For purpose of this Article12, the following definitions shall apply:

"Seller Group" shall mean (i) Seller, its parent, subsidiary or related companies, (ii) its and their working interest owners, co-lessees, co-owners, partners, joint venturers, if any, and their respective parents, subsidiary or related companies and (iii) the officers, directors, employees, consultants, agents and invitees of all of the foregoing.

"Buyer Group" shall mean (i) Buyer, its parent, subsidiary or related companies, (ii) its and their working interest owners, co-lessees, co-owners, partners, joint venturers, if any, and their respective parents, subsidiary or related companies and (iii) the officers, directors, employees, consultants, agents and invitees of all of the foregoing.

"Claims" shall mean all claims, demands, causes of action, liabilities, damages, judgments, fines, penalties, awards, losses, costs, expenses (including, without limitation, attorneys' fees and costs of litigation) of any kind or character arising out of, or related to, the performance of or subject matter of this Agreement (including, without limitation, property loss or damage, personal or bodily injury, sickness, disease or death, loss of services and/or wages, or loss of consortium or society).

a) Seller shall release, indemnify, defend and hold Buyer Group harmless from and against any and all Claims in respect of personal or bodily injury to, sickness, disease or death of any member of Seller Group or Seller Group's subcontractors or their employees, agents or invitees, and all Claims in respect of damage to or loss or destruction of property owned, leased, rented or hired by any member of Seller Group or Seller Group's subcontractors or their employees, agents or invitees.

b) Buyer shall release, indemnify, defend and hold Seller Group harmless from and against any and all Claims in respect of personal or bodily injury to, sickness, disease or death of any member of Buyer Group or Buyer Group's other contractors or their employees, agents or invitees, and all Claims in respect of damage to or loss or destruction of property owned, leased, rented or hired by any member of Buyer Group or Buyer Group's other contractors or their employees, agents or invitees.

c) Each party covenants and agrees to support the mutual indemnity obligations contained in Paragraphs (a) and (b) above, by carrying equal amounts of insurance (or qualified self insurance) in an amount not less than U.S. $5,000,000.00.

d) Notwithstanding anything contained in this Agreement to the contrary, in all instances where Seller is providing Services at a well site, Buyer, to the maximum extent permitted under applicable law, shall release, indemnify, defend and hold Seller Group and Seller Group subcontractors harmless from and against any and all Claims asserted by or in favor of any person or party, including Seller Group, Buyer Group or any other person or party, resulting from: (i) loss of or damage to any well or hole (including but not limited to the costs of re-drill), (ii) blowout, fire, explosion, cratering or any uncontrolled well condition (including but not limited to the costs to control a wild well and the removal of debris), (iii) damage to any reservoir, geological formation or underground strata or the loss of oil, water or gas therefrom, (iv) pollution or contamination of any kind (other than surface spillage of fuels, lubricants, rig sewage or garbage, to the extent attributable to the negligence of Seller Group, including but not limited to the cost of control, removal and clean-up, or (v) damage to, or escape of any substance from, any pipeline, vessel or storage facility.

e) NOTWITHSTANDING ANYTHING CONTAINED IN THIS AGREEMENT TO THE CONTRARY, NEITHER PARTY SHALL BE LIABLE TO THE OTHER AND EACH PARTY RELEASES THE OTHER FOR ANY INDIRECT, SPECIAL, PUNITIVE, EXEMPLARY OR CONSEQUENTIAL DAMAGES OR LOSSES (WHETHER FORESEEABLE AT THE DATE OF THIS AGREEMENT, INCLUDING WITHOUT LIMITATION, DAMAGES FOR LOST PRODUCTION, LOST REVENUE, LOST PRODUCT, LOST PROFIT, LOST BUSINESS OR BUSINESS OPPORTUNITIES.

f) Seller's total liability for all claims, damages, causes of action, demands, judgments, fines, penalties, awards, losses, costs and expenses (including attorney's fees and cost of litigation) shall be limited to and shall not exceed the value of the Equipment, Parts, Services or Rental purchased under the Agreement.

g) THE EXCLUSIONS OF LIABILITY, RELEASES AND INDEMNITIES SET FORTH IN PARAGRAPHS A. THROUGH F. OF THIS ARTICLE 12 SHALL APPLY TO ANY CLAIM(S), LOSSES OR DAMAGES WITHOUT REGARD TO THE CAUSE(S) THEREOF, INCLUDING BUT NOT LIMITED TO PRE-EXISTING CONDITIONS, WHETHER SUCH CONDITIONS BE PATENT OR LATENT, THE UNSEAWORTHINESS OF ANY VESSEL OR VESSELS, IMPERFECTION OF MATERIAL, DEFECT OR FAILURE OF PRODUCTS OR EQUIPMENT, BREACH OF REPRESENTATION OR WARRANTY (EXPRESS OR IMPLIED), ULTRAHAZARDOUS ACTIVITY, STRICT LIABILITY, TORT, BREACH OF CONTRACT, BREACH OF DUTY (STATUTORY OR OTHERWISE), BREACH OF ANY SAFETY REQUIREMENT OR REGULATION, OR THE NEGLIGENCE OR OTHER LEGAL FAULT OR RESPONSIBILITY OF ANY PERSON (INCLUDING THE INDEMNIFIED OR RELEASED PARTY), WHETHER SUCH NEGLIGENCE BE SOLE, JOINT OR CONCURRENT, ACTIVE OR PASSIVE.

h) Redress under the indemnity provisions set forth in this Article 12 shall be the exclusive remedy(ies) available to the parties hereto for the matters, claims, damages and losses covered by such provisions.

13. INSURANCE

Upon written request, each party shall furnish to the other party certificates of insurance evidencing the fact that the adequate insurance to support each party's obligations hereunder has been secured. To the extent of each party's release and indemnity obligations expressly assumed by each party hereunder, each party agrees that all such insurance policies shall, (a) be primary to the other party's insurance; (b) include the other party, its parent, subsidiary and affiliated or related companies, and its and their respective officers, directors, employees, consultants and agents as additional insured; and, (c) be endorsed to waive subrogation against the other party, its parent, subsidiary and affiliated or related companies, and its and their respective officers, directors, employees, consultants and agents.

14. GOVERNING LAW

Except for Equipment, Parts, Services or Rental provided, or to be provided, by Seller in North or South

America (the "America's"), this Agreement shall be governed by and interpreted in accordance with the laws of England and Wales, excluding conflicts and choice of law principles. All disputes arising out of or in connection with this Agreement shall be finally settled under the Rules of Arbitration of the International Chamber of Commerce by one or more arbitrators appointed in accordance with said rules. Arbitration shall be held in London, England and shall be conducted in the English language.

For Equipment, Parts, Services or Rental provided, or to be provided, by Seller in the America's, this Agreement shall be governed by and interpreted in accordance with the substantive laws of the State of Texas, excluding conflicts and choice of law principles. Any dispute, action or proceeding arising out of or relating to this Agreement must be brought in a state or federal court sitting in Harris County, Texas, and each of the parties hereby agrees to irrevocably submit itself to the exclusive jurisdiction of each such court in any such action or proceeding and waives any objection it may now or hereafter have to venue or convenience of forum.

Seller retains the right to arbitrate any all disputes that may arise in connection with the provision of the Equipment, Parts, Services or Rental.

15. OWNERSHIP AND PATENT INDEMNITY

All software used in connection with the Equipment, Parts, Services or Rental, either purchased or rented from Seller, is copyrighted and owned by Seller and licensed to Buyer. Seller warrants that the use or sale of Equipment or Parts hereunder will not infringe patents of others by reason of the use or sale of such Equipment or Parts per se, and hereby agrees to hold Buyer harmless against judgment for damages for infringement of any such patent, provided that Buyer shall promptly notify Seller in writing upon receipt of any claim for infringement, or upon the filing of any such suit for infringement, whichever first occurs, and shall afford Seller full opportunity, at Seller's option and expense, to answer such claim or threat of suit, assume the control of the defense of such suit, and settle or compromise same in any way Seller sees fit. Seller does not warrant that such Equipment or Parts: (a) will not infringe any such patent when not of Seller's manufacture, or specially made, in whole or in part, to the Buyer's design specifications; or (b) if used or sold in combination with other materials or apparatus or used in the practice of processes, will not, as a result of such combination or use, infringe any such patent, and Seller shall not be liable and does not indemnify Buyer for damages or losses of any nature whatsoever resulting from actual or alleged patent infringement arising pursuant to (a) and (b) above. **THIS ARTICLE STATES THE ENTIRE RESPONSIBILITY OF SELLER CONCERNING PATENT INFRINGEMENT**.

16. REGULATORY COMPLIANCE

By acceptance of delivery under this Agreement, Buyer warrants it has complied with all applicable governmental, statutory and regulatory requirements and will furnish Seller with such documents as may be required. Seller warrants and certifies that in the performance of this Agreement, it will comply with all applicable statutes, rules, regulations and orders in effect at the time of Agreement execution, including laws and regulations pertaining to labor, wages, hours and other conditions of employment, and applicable price ceilings if any. Seller will not provide any certification or other documentation nor agree to any contract provision or otherwise act in any manner which may cause Seller to be in violation of applicable United States law, including but not limited to the Export Administration Act of 1979 and regulations issued pursuant thereto. **No provision in this Agreement shall be interpreted or applied which would require any party to do or refrain from doing any act which would constitute a violation of, or result in a loss of economic benefit under, any anti-boycott including but not limited to any such law of the United States.** All Orders shall be conditional upon granting of export licenses or import permits which may be required. Buyer shall obtain at its own risk any required export license and import permits and Buyer shall remain liable to accept and pay for material if licenses are not granted or are revoked.

17. CONFIDENTIAL INFORMATION

Each party recognizes and acknowledges that it shall maintain all data, information, disclosures, documents, drawings, specifications, patterns, calculations, technical information and other documents (collectively, "Confidential Information") obtained from the other party in strict confidence. However, nothing hereinabove contained shall deprive the party receiving the Confidential Information of the right to use or disclose any information: (a) which is, at the time of disclosure, known to the trade or public; (b) which becomes at a later date known to the trade or the public through no fault of the party receiving the Confidential Information and then only after said later date; (c) which is possessed by the party receiving the Confidential Information, as evidenced by such party's written records, before receipt thereof from the party disclosing the Confidential Information; (d) which is disclosed to the party receiving the Confidential Information in good faith by a third party who has an independent right to such information; (e) which is developed by the party receiving the Confidential Information as evidenced by documentation, independently of the Confidential Information; or, (f) which is required to be disclosed by the party receiving the Confidential Information pursuant to an order of a court of competent jurisdiction or other governmental agency having the power to order such disclosure, provided that the party receiving the Confidential Information uses its best efforts to provide timely notice to the party disclosing the Confidential Information of such order to permit such party an opportunity to contest such order. In the event that Seller owns copyrights to, patents to or has filed patent applications on, any technology related to the Equipment, Parts, Services or Rental furnished by Seller hereunder, and if Seller makes any improvements on such technology, then Seller shall own all such improvements, including drawings, specifications, patterns, calculations, technical information and other documents.

18. INDEPENDENT CONTRACTOR

It is expressly understood that Seller is an independent contractor, and that neither Seller nor its principle, partners, employees or subcontractors are servants, agents or employees of Buyer. In all cases where Seller's employees (defined to include Seller's and its subcontractors, direct, borrowed, special, or statutory employees) are covered by the Louisiana Worker's Compensation Act. La. R.S. 23:102 *et seg.*, Seller and Buyer agreed that all Equipment, Parts, Services or Rental provided by Seller and Seller's employees pursuant to this Agreement are an integral part of and are essential to the ability of Buyer to generate Buyer's goods, products, and services for the purpose of La. R.S. 23:106(A) (1). Furthermore, Seller and Buyer agree that Buyer is the statutory employer of all of Seller's employees for the purpose of La. R.S. 23:1061(A) (3).

19. ADDITIONAL RENTAL TERMS AND CONDITIONS

Unless otherwise indicated, the rental rates contained in Seller's Proposal are on a per day basis and such rates shall apply to each piece of equipment or part rented. Seller represents that it has fully inspected the Rental equipment and parts as detailed in the Agreement and that said equipment and parts are in good condition and repair, and are fully acceptable for use as specified in the Agreement. Furthermore, Seller represents that the Rental equipment and parts are not subject to any encumbrances or liens, and that Seller has full title to the equipment and parts, and thus, Seller is authorized to enter into and execute this Agreement.

Buyer represents that it shall use the Rental equipment and parts in a careful and proper manner and shall comply with all laws, ordinances and regulations relating to the possession, use and maintenance of the equipment and parts in accordance with Seller's approved procedures. In the event the parties agree that the Buyer shall operate the Rental equipment and parts, Buyer further represents that the Rental equipment and parts will be operated by skilled employees trained in the use of the Rental equipment and parts. Buyer shall keep the Rental equipment and parts free and clear of all liens and encumbrances arising in connection with Buyer's operations and/or use of the Rental equipment and parts. Buyer, at its sole cost, shall provide and maintain insurance against the loss, theft, damage or destruction of the Rental equipment and parts. The coverage shall be in an amount not less than the new replacement price of the Rental equipment and parts. NOV shall provide equipment and parts prices at execution of this Agreement.

At the expiration of the applicable rental term, Buyer will at its sole cost return the Rental equipment to the facility designated by Seller, in working condition (reasonable wear and tear excepted). Upon receipt of the returned Rental equipment, Seller will service and inspect the Rental equipment. In the event Seller determines that the Rental equipment is materially damaged or not in working condition (reasonable wear and tear excepted), any service work required to bring the Rental equipment to good working condition will be charged back to the Buyer. Such charges may include service, inspection, and spare parts.

20. GENERAL

Failure of Buyer or Seller to enforce any of the terms and conditions of this Agreement shall not prevent a subsequent enforcement of such terms and conditions or be deemed a waiver of any subsequent breach. Should any provisions of this Agreement, or portion thereof, be unenforceable or in conflict with applicable governing country, state, province, or local laws, then the validity of the remaining provisions, and portions thereof, shall not be affected by such unenforceability or conflict, and this Agreement shall be construed as if such provision supersedes all prior oral or written agreements or representations. Buyer acknowledges that it hast not relied on any representations other than those contained in this Agreement. This Agreement shall not be varied, supplemented, qualified, or interpreted by any prior course of dealing between the parties or by any usage of trade and may only be amended by an agreement executed by an authorized representative of each party.

5. Polymer Feed System

FIRM PROPOSAL

POLYBLEND® POLYMER FEED SYSTEM
FOR
Alexander Avenue Water Management Site Improvements

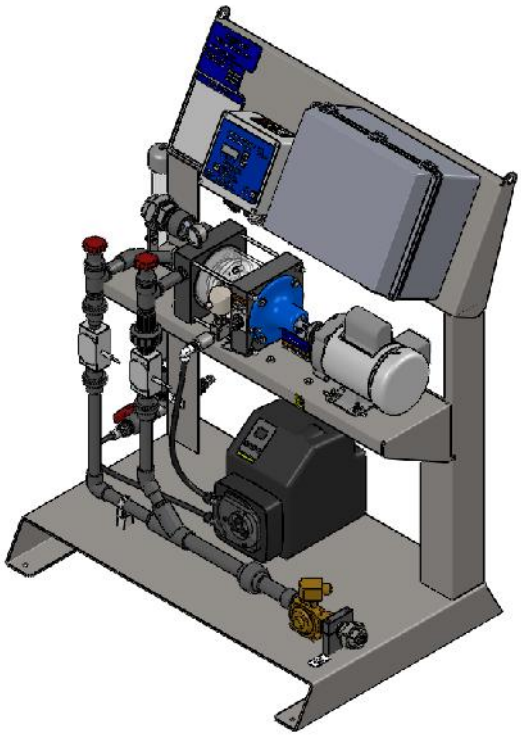

UGSI Chemical Feed, Inc. File No.: L15-0319

Revised: March 29, 2016

SALES REPRESENTATIVE
Brian Schuette
MOSS KELLEY, INC.
725 Primera Blvd. #155
Lake Mary, FL 32746
407-805-0063 Office
407-808-4264 Mobile
Email: bks@mosskelley.com

TABLE OF CONTENTS

Cover Letter

Section 1: Commercial Proposal

Section 2: Technical Information

Section 3: Equipment Specifications

Section 4: Brochures

IMPORTANT NOTICE: All the information in this Proposal is confidential and has been prepared for Buyer's use solely in considering the purchase of the Equipment described. Transmission of all or any part of this Proposal to others or use by Buyer for other purposes is unauthorized without Seller's advance written consent.

March 29, 2016

RE: Polymer Feed System for Alexander Avenue Water Management Site Improvements
UGSI Chemical Feed, Inc. File No.: L15-0319

To Whom It May Concern,

Thank you for your interest in UGSI Chemical Feed, Inc. Per the request of our representative, Mr. Brian Schuette at Moss Kelley, Inc., we have prepared this proposal for providing one (1) PolyBlend® M601-T4.6AB Polymer Feed Systems for Alexander Avenue Water Management Site Improvements. Our proposal is based on the following design criteria:

Design Criteria and System Sizing

Polymer Pump Capacity, gal/hr	0.004-4.6
Water Flow Rate (Maximum), gal/hr	30-600

Our polymer feed system is a packaged system. It consists of a polymer pump, mix chamber, piping, valves, instrumentation and controls to make a complete and functional system.

Each system is pre-assembled, piped, wired, and factory tested to facilitate installation and start-up at the jobsite. Installation at the jobsite is limited to anchoring the equipment, utilities connections, interconnecting piping and wiring. The major system components are as follows:

1. Mix Chamber
2. Primary and Secondary Dilution Water Flow Indicators and Control Valves
3. Polymer Pump
4. FRP NEMA 4X Electrical Control Panel
5. Instrumentation and Miscellaneous Accessories

The price for each complete system (Items 1 through 5), FOB job site is listed in the Section 1 Commercial proposal. All pricing is based on our standard system, as outlined in the attached specifications. The price does not include utilities provision and hook-up, suction piping to chemical metering pump, discharge piping to feed point, controller/signal wiring to SCADA, or installation.

System Features & Advantages

The UGSI Chemical Feed, Inc. PolyBlend® M601-T4.6AB Polymer Feed System incorporates many features and advantages, including:

- Superior polymer activation technique with two stages of mechanical mixing utilizing both high- and low- energy mixing zones results in substantially lower neat polymer consumption than hydraulic (non-mechanical) and single-stage mixing type polymer feed systems
- Integral post dilution optimizes polymer activation and can increase the equipment operating capacity without affecting the footprint or power requirement
- Transparent mix chamber provides quick visual indication of polymer feed and performance
- Flexible pump and control configurations for different operational requirements

- Stainless steel open frame equipment skid design facilitates easy access to all components for efficient inspection and maintenance and can be configured for floor or wall mounting
- Reliable performance and robust construction reduces operator attention and lowers maintenance costs
- Pre-assembled, piped, wired and tested at the factory prior to shipment
- Delivered and installed quickly, with minimum construction and installation cost and time
- Proven track record supported by years of successful operational experience

We have attached our technical proposal in section 2 and equipment specifications in section 3. Section 4 includes our brochures.

We look forward to working with you on this project. If we can be of any further assistance, please do not hesitate to contact our sales representative, Brian Schuette at Moss Kelley, Inc. or me at 727-812-9335.
.

Thank you.

Sincerely,

Brian Branch
Regional Sales Manager

Cc: Joe Pedano, UGSI Chemical Feed, Inc.
Brian Schuette, Moss Kelley, Inc

SECTION 1

COMMERCIAL PROPOSAL
PolyBlend® Polymer Feed System

- Scope of Work by UGSI Chemical Feed, Inc.
- Scope of Work by Buyer
- Shipping Information
- Field Services
- Schedule
- Proposal Validity
- Payment Terms
- Taxes
- Warranty
- Terms and Conditions
- Proposal Acceptance

SCOPE OF WORK BY UGSI CHEMICAL FEED, INC. ("SELLER")

The following equipment and services are included in Seller's scope of work. All equipment will be manufactured in accordance with Seller's standard equipment specifications and installed in a non-hazardous area

No	Item Description	Qty.
1.	**Skid-Mounted, Pre-assembled, Piped, and Wired, Factory-Tested PolyBlend® M601-T4.6AB Polymer Feed System**, including: ▪ Mix Chamber with Bronze Impeller ▪ Dilution Water Paddle Wheel Flowmeters and Control Valves ▪ Peristaltic Polymer Pump ▪ Dilution Water Solenoid Valve ▪ Dilution Water and Polymer Check Valves ▪ Post-Dilution Static Mixer ▪ Calibration Column ▪ Stainless Steel Open Frame Equipment Skid with Anchor and Lifting Lugs	1
	Skid-Mounted Electrical Control Panel, including: [B CONTROLS] ▪ NEMA 4X Enclosure – FRP Construction ▪ Programmable Microcontroller with 4-Digit LED Display ▪ Remote Start Contact ▪ 4-20 mA Output Signal for Polymer Pump Speed ▪ Output Contacts for Run, General Alarm	1
2.	**Manufacturer's Services for Installation Inspection, System Start-Up, and Operator Training**	Included
3.	**Operation & Maintenance Manuals as Follows** ▪ O&M Manuals: Qty. Three (3) CD-ROMS with PDF File *Please notify us if an alternate quantity is required so that we can modify our proposal accordingly.*	Included
4.	**FOB Factory with Full Freight Allowed to, Deltona, FL**	Included
	EQUIPMENT PRICE [ITEMS 1-4]	**To Follow**

SCOPE OF WORK BY BUYER

1. Equipment unloading and installation.
2. All civil works and concrete pad for equipment.
3. Anchor bolts.
4. Electrical power to control panel (120V/1Ph/60Hz).
5. All interconnecting piping, including from neat polymer storage to pump suction and from polymer feed system to point of application.
6. Water supply piping to water connection- 600 gph at 50 psi.
7. Valves, fittings, appurtenances not specifically listed under Scope of Supply by UGSI Chemical Feed, Inc.
8. All electrical conduit, wiring, electrical material, etc. from control panel to plant SCADA, etc.

9. Decks, stairs and mezzanines not specifically listed under Scope of Supply by UGSI Chemical Feed, Inc.
10. Room ventilation, air conditioning, or lighting.
11. Videotaping (unless a videotape agreement is signed).
12. All taxes, fees, lien waivers, bonds and licenses.
13. Any items not explicitly listed under Scope of Supply by UGSI Chemical Feed, Inc.

SHIPPING INFORMATION

Shipping Dimensions: 42" W x 24" D x 48" H
Estimated Shipping Weight: 450 lbs

FIELD SERVICES

Should additional services be required for work beyond Seller's Scope of Work, Buyer may purchase such services from Seller at a standard rate of $1,500 per eight (8) hour day, plus expenses.

SCHEDULE

As part of any binding Agreement that results from this proposal, Seller and Buyer shall mutually agree upon a production and delivery schedule (not to exceed the outside delivery date stated below). Our normal lead time for this type of equipment is:

Design Submittal (if required):	6-8 weeks after receipt of a fully executed purchase order
Equipment Shipment:	8-10 weeks after seller's written receipt of submittal approval and release for fabrication

PROPOSAL VALIDITY

Seller's Firm Proposal dated March 29, 2016 is valid until June 29, 2016 **[3 months from proposal date]**. The stated price is based on shipment no later than June 29, 2017 **[ONE YEAR FROM PROPOSAL VALIDITY EXPIRATION DATE]**. In the event Buyer desires to extend the delivery date or the Warranty Period beyond the time period set forth in this Proposal, Seller can offer extended terms for an additional charge which will be provided upon request.

PAYMENT TERMS

Subject to prior credit approval, the terms of payment are:

100% upon equipment shipment (or offer to ship), Net 30 days

TAXES

Seller's Proposal does not include any sales, use, federal, state, local, excise, or other similar taxes or duties unless expressly stated in this quotation. All applicable taxes shall be paid by Buyer. Upon acceptance of an order by Seller, Buyer shall provide a resale certificate or tax exemption certificate, whichever is applicable, to Seller.

WARRANTY TERM

The Warranty Period is one (1) year from initial operation or 18 months from shipment, whichever occurs first, and is subject to the Standard Terms of Sale referenced in this Proposal.

TERMS AND CONDITIONS

Seller's below Standard Terms of Sale, incorporated herein by this reference, will apply to any order resulting from this Proposal and are factored into the purchase price set forth in this Proposal.

Terms and Conditions of Sale

1. Applicable Terms. These terms govern Seller's sale, and Buyer's purchase, of the products and/or services contemplated by Seller's proposal or order acknowledgment (collectively, the "Products"). Whether these terms are included in an offer or an acceptance by Seller, such offer or acceptance is conditioned on Buyer's assent to these terms. Any additional, different or conflicting terms contained in Buyer's request for proposal, specifications, purchase order or any other written or oral communication from Buyer shall not be binding in any way on Seller. Seller's failure to object to any such additional, different or conflicting terms shall not operate as a waiver of these terms.

2. Pricing & Payment. The prices shall be: (a) as stated in Seller's proposal or order acknowledgment, or if none are stated, (b) Seller's standard prices in effect at the time of release for shipment. Discounts, if any, are as specified on the latest discount sheets issued from time to time by Seller. Cash discounts are not applicable to notes or trade acceptances, to prepaid transportation charges when added to Seller's invoices or to discountable items if there are undisputed past due items on the account. Cash discounts shall only be allowed on that portion of the invoice paid within the normal discount period. Buyer grants Seller a security interest in the Products to secure Buyer's payment obligations hereunder.

a) Payment - Unless otherwise stated, all payments shall be net 30 days from invoice date payable in United States Dollars.

(b) Credit Approval - All orders are subject to credit approval by Seller. If Seller, in its discretion, is or becomes dissatisfied with Buyer's financial status, Seller may, without advance notice, terminate this order without liability; or condition such order on such modifications to the terms of payment as Seller, in its discretion, deems appropriate. In such case, Seller may also, in its discretion, withhold further manufacture or shipment; require immediate cash payments for past and future shipments; or require other security satisfactory to Seller before further manufacture or shipment is made; and may, if shipment has been made, recover the Products from the carrier, pending receipt of such cash or other security.

(c) Installment Shipment - If these terms require or authorize delivery of Products in separate lots to be separately accepted by Buyer, Buyer may only refuse such portion of a lot that fails to comply with the requirements of the Agreement. Buyer may not refuse to receive any lot or portion thereof for failure of any other lot or portion thereof to be delivered or to comply with the Agreement, unless such right of refusal is expressly provided for on the face hereof. Buyer shall pay for each lot in accordance with the terms hereof. Payment shall be made for the Products without regard to whether Buyer has made or may make any inspection of the Products. Products held for Buyer are at Buyer's sole risk and expense.

(d) Taxes, Shipping, Packing, Handling - Except to the extent expressly stated otherwise in these terms, prices do not include any freight, storage, insurance, taxes, excises, fees, duties or other government charges related to the Product or the transaction contemplated hereby, and Buyer shall pay such amounts or reimburse Seller for any such amounts Seller pays. If Buyer claims a tax or other exemption or direct payment permit, it shall provide Seller with a valid exemption certificate or permit and indemnify, defend and hold Seller harmless from any taxes, costs and penalties arising out of same. Prices include the costs of Seller's standard domestic packing only. Any deviation from this standard packing (domestic or export), including without limitation U.S. Government sealed packing, shall result in extra charges. Any and all increases, changes, adjustments or surcharges (including, without limitation, fuel surcharges) which may arise in connection with the freight charges, rates or classification included as part of these terms, shall be for the Buyer's account. Orders of less than $400 are subject to a $25 handling fee.

(e) Finance Charge - Buyer agrees to pay FINANCE CHARGES on the unpaid balance of all overdue invoices from the date each invoice is due until paid in full at an ANNUAL PERCENTAGE RATE of EIGHTEEN PERCENT (18%), or at the highest lawful rate, if lower.

(f) Disputed Invoice - In the event Buyer disputes all or any portion of an invoice, it shall notify Seller in writing of the amount in dispute and the reason for its disagreement within 21 days of receipt of the invoice. The undisputed portion shall be paid when due, and FINANCE CHARGES shall accrue on the unpaid portion from the date due until the date of payment, to the extent that such amounts are finally determined to be payable to Seller.

(g) Collection - Upon Seller's notice to Buyer of Buyer's default of these terms, Seller may, in addition to any other rights or remedies at contract or law, declare the entire balance of Buyer's account immediately due and payable or foreclose any security interest in Products delivered. If any unpaid balance is referred for collection, Buyer agrees to pay Seller, to the extent permitted by law, all collection costs incurred by Seller, including without limitation attorney fees, and court costs and expenses, in addition to all damages otherwise available, whether or not litigation is commenced or prosecuted to final judgment, and any FINANCE CHARGES accrued on any unpaid balance owed by Buyer.

3. Delivery; Title; Risk of Loss. Products shall be delivered F.O.B. Seller's point of shipment. Seller may make partial shipments. Shipping dates are approximate only and Seller shall not be liable for any loss or expense (consequential or otherwise) incurred by Buyer or Buyer's customers if Seller fails to meet the specified delivery schedule.

4. Deferment and Cancellation. Buyer shall have no deferment rights and Buyer shall be liable for cancellation charges, which shall include without limitation a) payment of the full product price for any finished Product or works in progress; b) payment for raw materials ordered pursuant to a firm purchase order; and c) such other direct costs incurred by Seller as a result of such cancellation.

5. Force Majeure. If Seller suffers delay in performance due to any cause beyond its reasonable control, including without limitation acts of God, strikes, labor shortage or disturbance, fire, accident, war or civil disturbance, delays of carriers, failure of normal sources of supply, or acts of government, the time of performance shall be extended by a period of time equal to the period of the delay and its consequences.

6. Buyer's Requirements. Timely performance by Seller is contingent on Buyer's supplying to Seller all required technical information and data, including without limitation drawing approvals, if applicable, and all required commercial documentation.

7. Limited Warranty. (a) Limited Product Warranty Statements. For each Product purchased from Seller or an authorized reseller, Seller makes the following limited warranties: (i) the Product is free from defects in material and workmanship, (ii) the Product materially conforms to Seller's specifications that are attached to, or expressly incorporated by reference into, these terms, and (iii) at the time of delivery, Seller has title to the Product free and clear of liens and encumbrances (collectively, the "Limited Warranties"). Warranties with respect to software which may be furnished by Seller as part of the Product, if any, are expressly set forth elsewhere in these terms. The Limited Warranties set forth herein do not apply to any software furnished by Seller.

(b) Conditions to the Limited Warranties.The Limited Warranties are conditioned on (i) the Product being stored, installed, operated and maintained in accordance with Seller's instructions, (ii) no repairs, modifications or alterations being made to the Product other than by Seller or its authorized representatives, (iii) the Product being used in compliance with any conditions or parameters set forth in specifications that are attached to, or expressly incorporated by reference into, these terms, (iv) use of the Product being discontinued after the Buyer or user has, or should have had, knowledge of any defect in the Product, (v) Buyer providing prompt written notice of any warranty claims within the warranty period described below, (vi) at Seller's discretion, Buyer either removing and shipping the Product or non-conforming part thereof to Seller, at Buyer's expense, or Buyer granting Seller access to the Products at all reasonable times and locations to assess the warranty claims, and (vii) Buyer not being in default of any payment obligation to Seller.

(c) Exclusions from Limited Warranty Coverage. The Limited Warranties specifically exclude any equipment comprising part of the Product that is not manufactured by Seller or not bearing its nameplate. To the extent permitted, Seller herby assigns any warranties made to Seller for such equipment. Seller shall have no liability to Buyer under any legal theory for such equipment or any related assignment of warranties. Additionally, any Product that is described as being experimental, developmental, prototype, or pilot is specifically excluded from the Limited Warranties and is provided to Buyer "as is" with no warranties of any kind. Also excluded from the Limited Warranties are normal wear and tear, including without limitation any expendable items that comprise part of the Product, such as fuses, light bulbs and lamps.

(d) Limited Warranty Period. Buyer shall have 12 months from initial operation of the Product or 18 months from shipment, whichever occurs first, to provide Seller with prompt, written notice of any claims of breach of the Limited Warranties. Continued use or possession of the Product after expiration of the warranty period shall be conclusive evidence that the Limited Warranties have been fulfilled to the full satisfaction of Buyer and user, unless Buyer has previously provided Seller with notice of a breach of the Limited Warranties.

(e) Remedies for Breach of Limited Warranty. Buyer's sole and exclusive remedies for any breach of the Limited Warranties are limited to Seller's choice of repair or replacement of the Product, or non-conforming parts thereof, or refund of the purchase price for the subject Product or part. The warranty on repaired or replaced Product or parts is limited to the remainder of the original warranty period. Buyer shall be responsible for any labor required to gain access to the Product so that Seller can assess the available remedies; and (ii) Buyer shall be responsible for all costs of installation of repaired or replaced Products or parts. All Products or parts replaced under this Limited Warranty will become the property of Seller.

(f) Transferability. The Limited Warranties shall be transferable during the warranty period to the initial end-user of the Product.

THE LIMITED WARRANTIES SET FORTH IN THIS SECTION ARE SELLER'S SOLE AND EXCLUSIVE WARRANTIES AND ARE SUBJECT TO THE LIMITS OF LIABILITY SET FORTH IN SECTION 8 BELOW. SELLER MAKES NO OTHER WARRANTIES, EXPRESS OR IMPLIED, INCLUDING, WITHOUT LIMITATION, WARRANTIES OF MERCHANTABILITY OR FITNESS FOR A PARTICULAR PURPOSE, OR ANY WARRANTIES THAT MIGHT ARISE FROM COURSE OF DEALING OR USAGE OF TRADE.

8. LIMITATION OF LIABILITY. NEITHER SELLER, NOR ITS SUPPLIERS, SHALL BE LIABLE, WHETHER IN CONTRACT, WARRANTY, FAILURE OF A REMEDY TO ACHIEVE ITS INTENDED OR ESSENTIAL PURPOSES, TORT (INCLUDING NEGLIGENCE), STRICT LIABILITY, INDEMNITY OR ANY OTHER LEGAL THEORY, FOR LOSS OF USE, REVENUE, SAVINGS OR PROFIT, OR FOR COSTS OF CAPITAL OR OF SUBSTITUTE USE OR PERFORMANCE, OR FOR INDIRECT, SPECIAL, LIQUIDATED, PUNITIVE, EXEMPLARY, COLLATERAL, INCIDENTAL OR CONSEQUENTIAL DAMAGES, OR FOR ANY OTHER LOSS OR COST OF A SIMILAR TYPE, OR FOR CLAIMS BY BUYER FOR DAMAGES OF BUYER'S CUSTOMERS. SELLER'S MAXIMUM LIABILITY UNDER ANY LEGAL THEORY SHALL BE THE ACTUAL PURCHASE PRICE RECEIVED BY SELLER FOR THE PRODUCT AT ISSUE OR ONE MILLION DOLLARS, WHICHEVER IS LESS. BUYER AGREES THAT THE EXCLUSIONS AND LIMITATIONS SET FORTH IN THIS ARTICLE ARE SEPARATE AND INDEPENDENT FROM ANY REMEDIES WHICH BUYER MAY HAVE HEREUNDER AND SHALL BE GIVEN FULL FORCE AND EFFECT WHETHER OR NOT ANY OR ALL SUCH REMEDIES SHALL BE DEEMED TO HAVE FAILED OF THEIR ESSENTIAL PURPOSE. THESE LIMITATIONS OF LIABILITY ARE EFFECTIVE EVEN IF BUYER HAS ADVISED SELLER OF THE POSSIBILITY OF SUCH DAMAGES.

9. Patent and Copyright Infringement. Seller will, at its own expense, defend, or at its option settle, any suit or proceeding brought against Buyer in so far as it is based on an allegation that any Product (including parts thereof), or use thereof for its intended purpose, constitutes an infringement of any United States patent or copyright, if Seller is promptly provided notice and given authority, information, and assistance in a timely manner for the defense of said suit or proceeding. Seller will pay the damages and costs awarded in any suit or proceeding so defended. Seller will not be responsible for any settlement of such suit or proceeding made without its prior written consent. In case the Product, or any part thereof, as a result of any suit or proceeding so defended is held to constitute infringement or its use by Buyer is enjoined, Seller will, at its option and its own expense, either: (a) procure for Buyer the right to continue using said Product; (b) replace it with a substantially equivalent non-infringing Product; or (c) modify the Product so it becomes non-infringing.

Seller will have no duty or obligation to Buyer under this Section 9 to the extent that the Product is (a) supplied according to Buyer's design or instructions wherein compliance therewith has caused Seller to deviate from its normal course of performance, (b) modified after delivery, (c) combined with devices, methods, systems or processes not furnished hereunder and by reason of said design, instruction, modification, or combination a suit is brought against Buyer. In addition, if by reason of such design, instruction, modification or combination, a suit or proceeding is brought against Seller, Buyer shall protect Seller in the same manner and to the same extent that Seller has agreed to protect Buyer under the provisions of this Section above.

10. Compliance with Laws. Buyer agrees to comply with all applicable laws and regulations relating to the purchase, resale, exportation, transfer, assignment, disposal or use of the Products.

11. Changes in Work. Seller shall not implement any changes in the scope of work unless Buyer and Seller agree in writing to the details of the change and any resulting price, schedule or other contractual modifications. Any change to any law, rule, regulation, order, code, standard or requirement which requires any change hereunder shall entitle Seller to an equitable adjustment in the prices and any time of performance.

12. Non-waiver of Default. Each shipment made hereunder shall be considered a separate transaction. In the event of any default by Buyer, Seller may decline to make further shipments. If Seller elects to continue to make shipments, Seller's actions shall not constitute a waiver of any default by Buyer or in any way affect Seller's legal remedies for any such default. Any waiver by Seller of the right to require strict compliance with the provisions of the Agreement shall be in writing and any failure of Seller to require such strict compliance shall not be deemed a waiver of Seller's right to insist upon strict compliance thereafter.

13. Final Written Agreement; Modification of Terms. The terms in Seller's proposal, together with any quotation, purchase order or acknowledgement issued or signed by Seller, comprise the complete and exclusive agreement between the parties (the "Agreement") and supersede any terms contained in Buyer's documents, which terms Seller rejects, unless separately signed by Seller. The Agreement may only be modified by a written instrument signed by authorized representatives of both parties.

14. Assignment. Neither party may assign the Agreement, in whole or in part, nor any rights or obligations thereunder without the prior written consent of the other; provided however that Seller may assign its rights and obligations under the Agreement to its affiliates and Seller may grant a security interest in the Agreement and/or assign proceeds of the Agreement without Buyer's consent.

15. Applicable Law and Jurisdiction. These terms are governed and construed in accordance with the laws of the State of Delaware, without regard to its conflict of laws principles. The application of the United Nations Convention on Contracts for the International Sale of Goods is excluded. BUYER WAIVES ALL RIGHTS TO A JURY TRIAL IN ANY ACTION OR PROCEEDING RELATED IN ANY WAY TO THESE TERMS.

16. Severability. If any provision of these terms is held to be invalid, illegal or unenforceable, the validity, legality and enforceability of the remaining provisions will not in any way be affected or impaired, and such provision will be deemed to be restated to reflect the original intentions of the parties as nearly as possible in accordance with applicable law.

17. Export Compliance. Buyer acknowledges that Seller is required to comply with applicable export laws and regulations relating to the sale, exportation, transfer, assignment, disposal, and usage of the Products provided under the Agreement, including without limitation any export license requirements. Buyer agrees that such Products shall not at any time directly or indirectly be used, exported, sold, transferred, assigned or otherwise disposed of in a manner which will result in non-compliance with such export laws and regulations. It shall be a condition of the continuing performance by Seller of its obligations hereunder that compliance with such export laws and regulations be maintained at all times. BUYER AGREES TO INDEMNIFY AND HOLD SELLER HARMLESS FROM ANY AND ALL COSTS, LIABILITIES, PENALTIES, SANCTIONS AND FINES RELATED TO NON-COMPLIANCE WITH APPLICABLE EXPORT LAWS AND REGULATIONS.

UGSI CHEMICAL FEED, INC. PROPOSAL No.: L15-0319

PROPOSAL DATE: MARCH 29, 2016

PROPOSAL ACCEPTANCE

An authorized signature indicates Buyer's acceptance of this proposal, including without limitation Seller's Terms and Conditions, reference above, and the following notes:

1. UGSI Chemical Feed, Inc. (Seller) proposes to furnish to the addressee named above (Buyer) the goods and services, if any, set forth above. Any items not shown above as detailed under 'SCOPE OF SUPPLY BY UGSI CHEMICAL FEED, INC.' are EXCLUDED. In addition:
   i. Seller's price will be held valid for the listed under 'PROPOSAL VALIDITY'. Seller shall have the right to reprice this proposal if the Buyer's order is received after the period listed under 'PROPOSAL VALIDITY'.
   ii. Prices are in US Dollars.
2. This proposal by Seller is contingent upon: (i) Seller's written acceptance of the signed proposal, a purchase order, or other document issued by the Buyer in response to this proposal; and (ii) Buyer's assent to the terms and conditions referenced and included in this proposal, such terms to take precedence in the event of conflict with any other terms or documents incorporated into the contract arising out of this proposal unless otherwise agreed in a writing, signed by "Seller"; and (iii) satisfactory completion of an anti-corruption due diligence review, if applicable.
3. All of the information supplied by Seller in connection with this proposal (including drawings, designs and specifications) (the "Information") is confidential and/or proprietary and has been prepared for Buyer's use solely in evaluating the purchase of the equipment and/or services described herein. Transmission of all or any part of the information to others, or use by Buyer for any purpose other than such evaluation, is expressly prohibited without Seller's prior written consent.
4. Please return a signed copy of this proposal or address and send your purchase order to:

   UGSI Chemical Feed, Inc.
   1901 West Garden Road
   Vineland, NJ 08360
   Attn: Debbie Petsch
   Phone: (856) 896-2174
   Fax: (856) 457-5920
   E-mail: dpetsch@ugsichemicalfeed.com

Thank you for your interest in UGSI Chemical Feed, Inc. We are committed to meeting your expectations.

_____
Company Name

_____
Buyer's Name (printed)

_____
Buyer's Authorized Signature

_____
Date

A. PROCESS DESIGN CRITERIA

Polymer Pump Capacity, gal/hr	0.004-4.6
Water Flow Rate (Maximum), gal/hr	30-600

B. PROCESS DESCRIPTION

PolyBlend® Polymer Feed Systems are designed to prepare and deliver a homogeneous liquid polymer solution to a process application point or intermediate storage tank through either a batch or continuous operation. The system is designed to handle new polymer developments, ultra-high molecular weights, different charge densities, and even totally new chemistries.

Our proprietary designs use shear velocities designed for optimum initial wetting followed by dissolution to utilize the full polymer activation and provide maximum economy and value in the use of polymers. Sufficient mixing and wetting energy intensity are created and controlled through two-stages of mechanical mixing (Fig. 1). As polymer and water are introduced into the first stage of the mix chamber, the high-shear agitation created by the motor-driven impeller ensures proper activation during initial wetting of the polymer and prevents unwanted agglomerations. The solution shall undergo a tapered mixing intensity slope as it exits the initial high sheer zone and passes through a second zone, isolated by a baffle. The second stage offers longer, low-shear mixing for dissolution and to minimize polymer fracture.

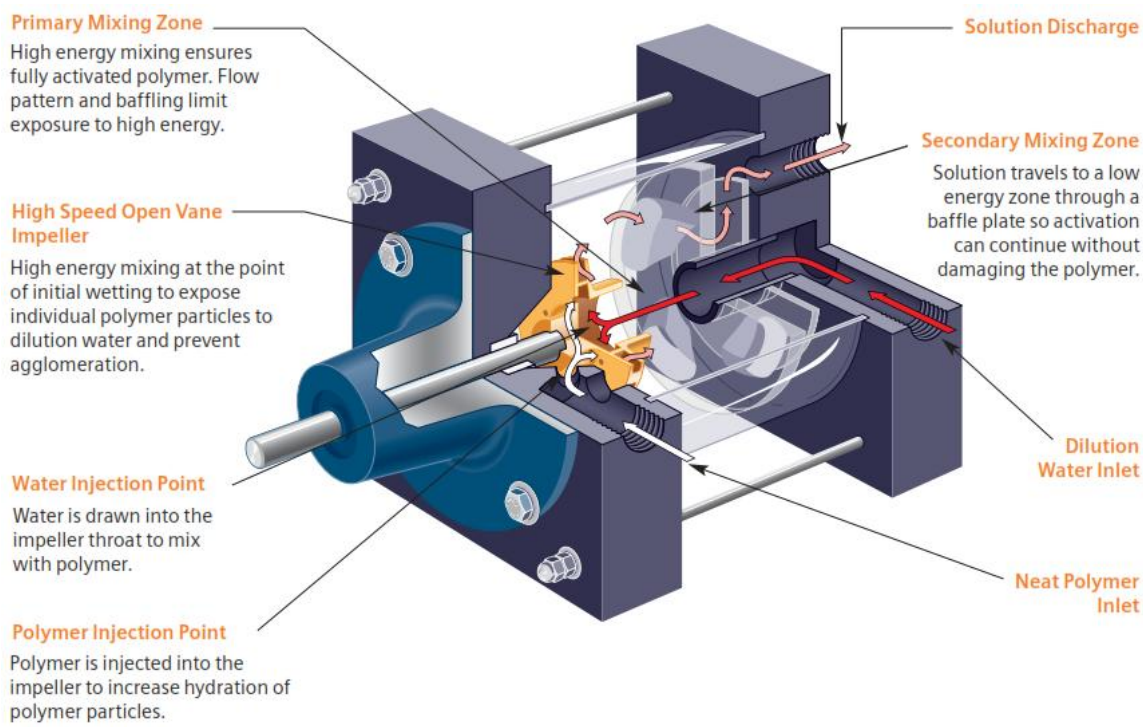

Figure 1. Isometric drawing of the mix chamber showing the unique high- and low-energy mixing zones and the liquid connection points.

Once initiated by either a local switch or a remote contact, the PolyBlend® system opens a solenoid valve that allows water to flow through the unit. Once proper water flow is

detected, the mixing chamber and polymer metering pump are activated. Solution concentration is determined through adjustments to the polymer feed rate and dilution water flow rates. The polymer feed rate is controlled by manual adjustment or by a 4-20 mA input signal, depending on the control strategy. Dilution water shall be split into two streams. Primary water flow shall supply the mixing chamber. Secondary water flow shall be used to post dilute the activated polymer stream. These two streams shall be completely blended by a static mixer prior to exiting the unit. If water flow is interrupted, the unit ceases operation until proper flow is restored.

Upon exiting the mix chamber, the now homogenous polymer solution is ready for further dilution, if required by process demands, prior to being fed to the process application point.

C. MAJOR SYSTEM COMPONENTS

The PolyBlend® Polymer Feed System is completely pre-assembled, piped, wired and factory tested prior to shipping to the job site. Following are the major system components. **Additional details are provided in the attached equipment specifications**.

1. Mix Chamber

The transparent design of the mix chamber provides quick visual indication of polymer feed and performance. The mixing chamber shall include a stainless steel injection check valve with quick disconnect design.

Parameter	Value
Construction	Acrylic, PVC
Impeller Type	Brass
Impeller Speed, RPM	3,450
Maximum Capacity, gal/hr	600
Drive Type	Direct Drive
Drive Motor	0.5 HP, TEFC, Washdown Duty
Power Requirements	115V/1ph/60Hz

2. Dilution Water Control

The polymer feed system shall have an electric solenoid valve for on/off control of total dilution water flow. Each stream shall have an electronic flow sensor with immersed in-line element capable of transmitting a signal to the unit controller for display of flow rate. Each stream shall have a rate control valve for isolation of or throttling of water flow and a sensor to confirm sufficient water flow for proper operation.

Parameter	Value
Flowmeter Type	Paddlewheel
Sensor Type	Integral
Valve Type	Globe

3. Polymer Pump

The polymer pump supplies neat emulsion polymer to the mix chamber for activation and dilution. Reliable polymer feed is required for precise control of solution concentration. The pump flow rate is controlled manually via potentiometer or automatically via 4-20 mA input signal.

PERISTALTIC: PUMP SUPPLIED BY D&H Water Systems FOR MOUNTING ON THE POLYMER SYSTEM.

Parameter	Value
Quantity	1
Type	Peristaltic
Flow Capacity, gal/hr	4.6
Discharge Pressure, psi	65
Drive	Brushless DC Motor, Keypad Controls

4. Electrical Control Panel

The PolyBlend® Polymer Feed System includes a complete pre-wired electrical control system. If the controls are remote mounted, a local junction box is provided on the polymer feed system equipment skid.

The power supply necessary is 120 VAC, 1 Ph, 60 Hz.

The electrical control system, as a minimum, shall include the following interface:

- Programmable Microcontroller
- “On-Off-Remote” circuit
- “Run” indicator light
- “Loss of Water Flow” indicator light
- “Primary Water Flow” display
- “Secondary Water Flow” display
- “Polymer Flow” display
- “Mixing Chamber Solution Concentration” display
- “Post-Dilution Discharge Concentration” display
- Remote Start contact
- Polymer Pump Speed output signal
- “Run” output contact
- “General Alarm” output contact

5. Instrumentation and Miscellaneous Accessories

The polymer feed system shall include the following instrumentation and accessories:

- System pressure gauge
- Polymer pump calibration column
- Union connection for dilution water flowmeters
- Post dilution static mixer
- Stainless steel unions for dilution water and solution output connections

- Stainless steel open frame equipment skid with integral anchor and lifting lugs

D. SYSTEM FEATURES & ADVANTAGES

The PolyBlend® Polymer Feed System offers maximum value measured by performance and reliability as well as capital, installation, maintenance, and operating costs. This is illustrated by the following system advantages:

1. Superior Polymer Activation

The mechanical mixing provided in the mix chamber provides higher activity polymer than processes utilizing hydraulic mixing. Polymer activation is further increased relative to other systems using other mechanical mixing designs by applying two unique mixing stages. The motor-driven impeller on the first stage creates high enough mixing energy to ensure optimal activation and prevention of fisheye formation. Mixing intensity decreases as the solution enters the second stage for longer, low-shear mixing, enhancing dissolution while reducing splintering of the long polymer molecular chains. The better activity of the polymer solution means substantially lower neat polymer consumption than hydraulic (non-mechanical) and single-stage mixing type polymer feed systems, and a reduction in chemical use and cost in the process.

2. Post-Dilution Optimizes Polymer Activation and Increases System Capacity

Post-dilution is required to optimize the activation of emulsion polymers. Inverting (breaker) surfactant included in emulsion polymer products can be best utilized when polymer solution concentration becomes as high as possible (ANSI/AWWA Standard B453-96). Therefore, it is recommended to make up emulsion polymer solution at 1% concentration in the mix chamber, followed by post-dilution down to feed concentration, 0.5% for dewatering and 0.25% for clarification processes. Another benefit of having a post-dilution is doubling the system capacity. As plant loads increase and operating requirements change, an increased demand for polymer solution is often realized. Each PolyBlend® M Series Polymer Feed System is designed with integral post dilution controls and mixing capabilities. This effectively increases the equipment operating capacity without affecting the footprint or operating power requirement.

3. Transparent Mix Chamber

The mix chamber is constructed of custom-milled PVC endplates fastened around a 1/4” thick acrylic housing. This combination of materials offers outstanding resistance to damage from chemicals, corrosion, and accidental impact without sacrificing the benefits of a clear chamber. The transparent housing enables instantaneous verification of mixer operation and polymer feed that would otherwise be unavailable for a mix chamber utilizing opaque materials of construction.

4. Customizable Pump and Control Configurations

In addition to the standard diaphragm-type polymer feed pump, a range of peristaltic, progressive cavity and gear pumps are available if necessary based on polymer type or desired based on customer preference. Similarly, in addition to the standard control package utilizing “On-Off-Remote” operation, options for more complex and configurable controls, including necessary instrumentation and valving, are available. A programmable microcontroller is applicable where more indications of flow, percent dilution, and other functions need to be displayed. This is especially effective when it is necessary to assure consistent solution concentrations are maintained in the holding tank. Use of the polymer dosage controller and PLC enables local and remote flow pacing modes. This highest degree of control is most useful where precise control of consistent solution concentrations is required, either from 4-20 mA signal or local control. The Polymer Dosage Controller, offers a system with unmatched activation flexibility.

5. Open Frame Equipment Skid

Each complete PolyBlend® M Series Polymer Feed System is skid-mounted. The type 304 stainless steel skid construction provides superior structural strength, chemical compatibility, and corrosion resistance. Use of an open frame design for the skid and a simple equipment layout facilitates access to each system component from multiple sides for easy inspection and maintenance. Custom-design skid configurations and equipment layouts are available and can utilize wall-mounted systems in addition to the standard floor-mounted arrangement.

6. Reliable Performance and Robust Construction

The robust construction of the PolyBlend® Polymer Feed System allows the feed, dilution, and mixing components to be subjected to minimum stress, lowering the maintenance requirements.

7. Factory Tested

Each complete system is pre-assembled, piped, and wired at the factory, allowing for thorough factory testing of not just each component, but of the entire system prior to shipment. At a minimum, a factory quality technician shall operate and calibrate the polymer pump, verify calibrations for flow meters, pressure gauge, and other instrumentation, and test the complete control system prior to running the unit in automatic mode.

8. Minimum Installation Cost and Time

Most parts for the PolyBlend® M Series Polymer Feed Systems are inventoried at the factory, reducing lead times for shipment to as little as one week in some cases. By skid-mounting the system, installation is quick and straightforward, with minimum time and cost. Water line, neat polymer feed, activated polymer solution and electrical connections are all predetermined and are clearly indicated. Onsite construction is limited to providing a concrete equipment pad to mount the system to and completing the system connections.

9. Proven Track Record

The PolyBlend® Polymer Feed System has been available for over three decades. This system is a fully-developed, mature product supported by an extensive list of successful installations.

E. UTILITY AND CONNECTION REQUIREMENTS

Utility and connection requirements for PolyBlend® Polymer Feed System are as follows:

Parameter	Value
Power Requirement	120V, 1 phase, 60 Hz, 15 Amp
Signal Connection	4-20 mA (polymer feed pump), Remote start/stop
Water Requirement	3/4” FNPT, 600 gph 50 psi
Polymer Inlet Connection	½” FNPT
Solution Outlet Connection	3/4” FNPT

SECTION 2

EQUIPMENT SPECIFICATIONS
PolyBlend® Polymer Feed System

POLYBLEND® MODEL M601-T4.6AB SPECIFICATIONS

PART 1 GENERAL

1.01 DESCRIPTION

A. The polymer system shall be the standard equipment of the supplier involved in the manufacture of similar type equipment and shall be the PolyBlend® Model M601-T4.6AB as manufactured by Underground Solutions Incorporated.

B. Equipment included with the polymer system includes:

1. Mixing Chamber
2. Dilution water controls
3. Neat polymer pump
4. System Controls

C. The polymer system shall be a skid mounted system with interconnecting piping and wiring complete within skid limits.

PART 2 PRODUCTS

2.01 SYSTEM DESCRIPTION

A. Multi-Zone Mixing Chamber and Post-Dilution

1. Polymer and water shall be mixed in a chamber designed to create sufficient mixing energy.
   a. High shear zone of the mixing chamber shall have a mechanical mixing impeller for successful initial activation and the low shear zone shall not have a mixing impeller to avoid damaging polymer molecules.
   b. Solution shall undergo a tapered mixing intensity slope as it exits the initial high sheer zone and passes through a second low shear zone, isolated by a baffle.
   c. The design shall have primary mixing and post-dilution to maximize the value of breaker surfactant present in emulsion polymer, as per the AWWA Standard for Polyacrylamide (ANSI/AWWA B453-06).
   d. Polymer activation efficiency shall be consistent over the dilution water range.

2. Mixing chamber shall be transparent to allow viewing of mixing intensity. Opaque mixing chamber shall be unacceptable.

3. Impeller shall be driven by a 1 HP maximum washdown duty motor.
   a. Motor shall be TEFC.
   b. Impeller speed shall be 3450 rpm, minimum.
   c. Motor shall be direct-coupled to impeller shaft.

4. Mixing chamber shall include a stainless steel injection check valve.

5. In order to quantify the mixing intensity in the mix chamber, the applied horsepower shall be defined by measuring the difference in torque when the mix chamber is empty versus being full of water. This value shall be the basis of determining the mixing intensity defined as "G" value.

6. The G-value in the high shear mixing zone shall exceed 14,000 sec^{-1} to effectively disperse polymer gels to prevent fisheye formation.

7. The G-value in the low shear mixing zone shall be lowered to 3,500 sec^{-1} to avoid damaging polymer chains.

B. Dilution Water Control

1. Dilution water shall be split into two streams.
   a. Primary water flow shall supply the mixing chamber.
   b. Secondary water flow shall be used to post dilute the activated polymer stream.
   c. These two streams shall be completely blended by a static mixer prior to exiting the unit.
   d. Each stream shall have an electronic flow sensor with immersed in-line element capable of transmitting a signal to the unit microcontroller for display of flow rate.
   e. Element shall be removable without plumbing disassembly.
   f. Each stream shall have a rate control valve for isolation of or throttling of water flow.

2. Unit shall have an electric solenoid valve for on/off control of total dilution water flow.

3. Dilution water and solution output connections shall include 304 stainless steel unions connected to the chassis.

C. Pump

1. Unit shall have a neat polymer metering pump.
   a. Pump shall be peristaltic type.
   b. Polymer tubing shall be fabricated of tygothane.
   c. Pump shall have membrane keypad and display for pump control and status.
   d. A suitably sized calibration cylinder shall be mounted to the frame with PVC isolation ball valves. Cylinder shall be calibrated in mL,

and be constructed of clear PVC with slip on cap and ½ inch NPT vent connection.

D. Controls

1. Unit shall be operated with a programmable microcontroller.
   a. Controller shall have polycarbonate touchpad membrane with four digit LED readout.
   b. Enclosure shall be non-metallic and of waterproof design.

2. Microcontroller shall pace polymer metering pump based on operator programmed data or based on a 4-20 mA analog input signal.
   a. Operator shall be able to determine mode of operation at touchpad, internal or external.
   b. Internal mode shall allow for automatic polymer pump pacing based on programmed setpoint.
   c. Operator shall be able to enter a make up concentration setpoint.
   d. Controller will compute a ratio of polymer to water from primary dilution water flow rate signal generated by flow element.
   e. Controller will generate signal to pace pump accordingly.
   f. As primary dilution water flow changes, setpoint concentration will be automatically maintained by controller.
   g. External mode shall allow for automatic polymer pump pacing based on a 4-20 mA analog input signal.

3. Unit shall be controlled through an on-off-remote circuit.
   a. In the remote mode, the unit shall accept a run signal.
   b. Unit is manually controlled in the on mode.
   c. Controller shall indicate mode of operation with LED.

4. Unit shall detect loss of water flow, sensing that water flow has been interrupted for any reason, will place the polymer pump and mix chamber on standby and will restart it automatically when flow is restored.

5. An integral timer shall monitor loss of flow and energize contacts indicating alarm after 15 seconds of continuous loss. Controller shall indicate loss of water alarm with LED.

6. Controller LED display shall indicate:
   a. Primary water flow
   b. Secondary water flow
   c. Polymer flow
   d. Make up solution concentration in mixing chamber
   e. Discharge solution concentration including post dilution

7. Controller shall have pre-programmed auto-flush cycle which will disable polymer pump yet allow dilution water to flow through system for a pre-set time at each shutdown.

8. Controller shall have dry contacts for these outputs:
   a. General alarm
   b. Run status

9. Controller shall have additional LED indication of these:
   a. Loss of water flow alarm
   b. One (1) additional configurable alarm
   c. Run status

2.02 TECHNICAL DATA

A. Connections – Plumbing

1. Dilution water inlet, 1” FNPT

2. Neat polymer inlet, ½” FNPT

3. Solution discharge, 1½” FNPT

B. Connections – Electrical

1. Standard, grounded male plug – 120 / 1 / 60, 15 amps

2. Plug in connection – 4-20 mA signal input

3. Terminal blocks – dry contact input for remote start

4. Terminal blocks – dry contact alarm output

5. Terminal blocks – dry contact run output

C. Dimensions

1. Frame – 37” wide x 28” deep x 47” high (94 x 71 x 120 cm)

D. Materials of Construction

1. Structural frame – 304 stainless steel

2. Plumbing – PVC

3. Mixing chamber – PVC, acrylic

E. Performance

1. Dilution water – 30-300 GPH primary mixing (227-2270 LPH)

30-300 GPH post dilution (227-2270 LPH)

2. Metering pump – 0.004-4.6 GPH neat polymer (0.015 -17.4 LPH)

PART 3 EXECUTION

3.01 INSTALLATION

A. The equipment shall be installed per the contract documents and manufacturer's recommendations.

3.02 WARRANTY

A. The warranty begins with the date of shipment and extends for a period of twelve (12) months. However, if start up by authorized Underground Solutions Incorporated technician occurs within twelve (12) months after the date of shipment and a start up form is filed with Underground Solutions Incorporated, the warranty period begins with the date of start up.

B. Damage due to makeup water particulates will not be considered as a warranty defect and will be the responsibility of the owner.

C. In addition, supplier shall warrant the system to operate in accordance with owner's expectation and performance.

D. If dissatisfied with system performance for any reason, the owner shall have the right to return the system to vendor for a refund of vendor's sale price any time during the first 30 days following shipment.

PART 4 OPTIONAL ACCESSORIES

A. Pressure reducing valve: A suitably sized pressure reducing valve shall be supplied for installation in the dilution water line. Pressure reducing valve shall be constructed of bronze with adjustable output pressure of 25-75 psig to reduce incoming line pressure variations. Pressure reducing valve shall be as manufactured by Watts Regulator model U5 or U5B.

B. Drumstick: A rigid drumstick suitable for mounting in the neat polymer drum bunge or vent connection shall be supplied to completely evacuate the drums contents. The drumstick shall be supplied with 2 inch NPT and ¾ inch NPT connections for connection to either port. Drumstick construction shall be PVC.

C. Drum Mixer: A bayonet mount drum mixer shall be supplied for mixing neat polymer drum contents. Mixer shall include a ½ hp, 1725 rpm TEFC motor with 28 inch long mixer shaft, (2) 4 inch long collapsible mixing blades, 8 foot power cord and on/off switch. Mounting plate shall include

2 inch bung mount and shall be constructed of mild steel with powder epoxy coating. Electrical requirements shall be 120 VAC/ 1 phase/ 60 Hz – 74. Amps.

D. Drum Dryer: A desiccant drum dryer shall be supplied to eliminate moisture laden air from entering the polymer drum. The drum dryer shall include a ¾ inch connection for mounting in the drum vent port.

E. Drum Dolly: A drum dolly/cradle shall be supplied for moving drums or tipping the drum on its side for dispensing. Polyolefin wheels and rollers shall be supplied for moving or positioning the drum, a kickstand shall be supplied to support the drum dolly in an upright position. Drum dolly shall have a 1 inch structural pipe frame, 1000 lb. capacity and suitable coating for corrosion prevention.

F. A neat polymer thermal loss of flow switch shall be supplied on the discharge of the neat polymer metering pump to detect absence of polymer flow. Thermal flow switch assembly shall include sensor, flow block and controls. Alarm output contacts shall be supplied for the plant control system after adjustable time delay.

H. Spare parts kit: Spare parts kit shall include mechanical seal, mixing chamber o-rings, injection check valve, spare polymer pump tube.

SECTION 3

BROCHURES
PolyBlend® Polymer Feed System

Redacted per Florida Statute 119.071 (3)b1

Page 209

UGSI CHEMICAL FEED, INC.

M601-T4.6AB

Redacted per Florida Statute 119.071 (3)b1

Page 210

UGSI CHEMICAL FEED, INC.

M601-T4.6AB, FLOW SCHEMATIC

THE INFORMATION CONTAINED IN THIS DRAWING IS THE SOLE PROPERTY OF VELOCITY DYNAMICS, INC. ANY REPRODUCTION IN PART OR WHOLE WITHOUT THE WRITTEN PERMISSION OF VELOCITY DYNAMICS, INC IS PROHIBITED

REVISIONS				
REV	ECO	DESCRIPTION	DATE	APPROVED
A	SO 1256	INITIAL RELEASE	5/9/13	C GRAY
B	SO 1256	AS BUILT	2/10/14	C GRAY

NOTE: DRAWINGS ARE FOR GENERAL LAYOUT USE ONLY. SEE PROPOSAL FOR DETAILS OF THE PROPOSED SCOPE OF SUPPLY.

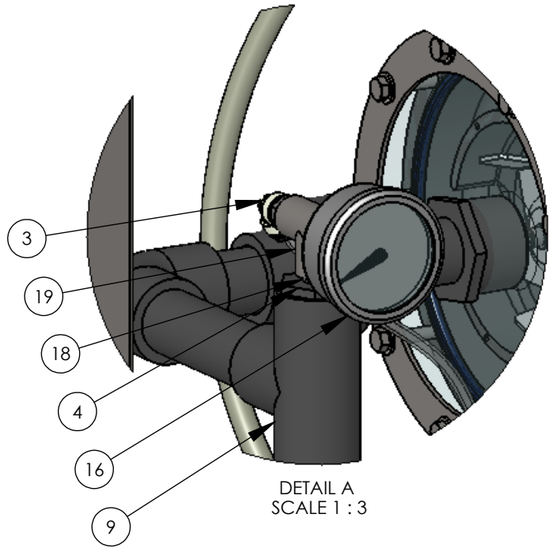

DETAIL A
SCALE 1 : 3

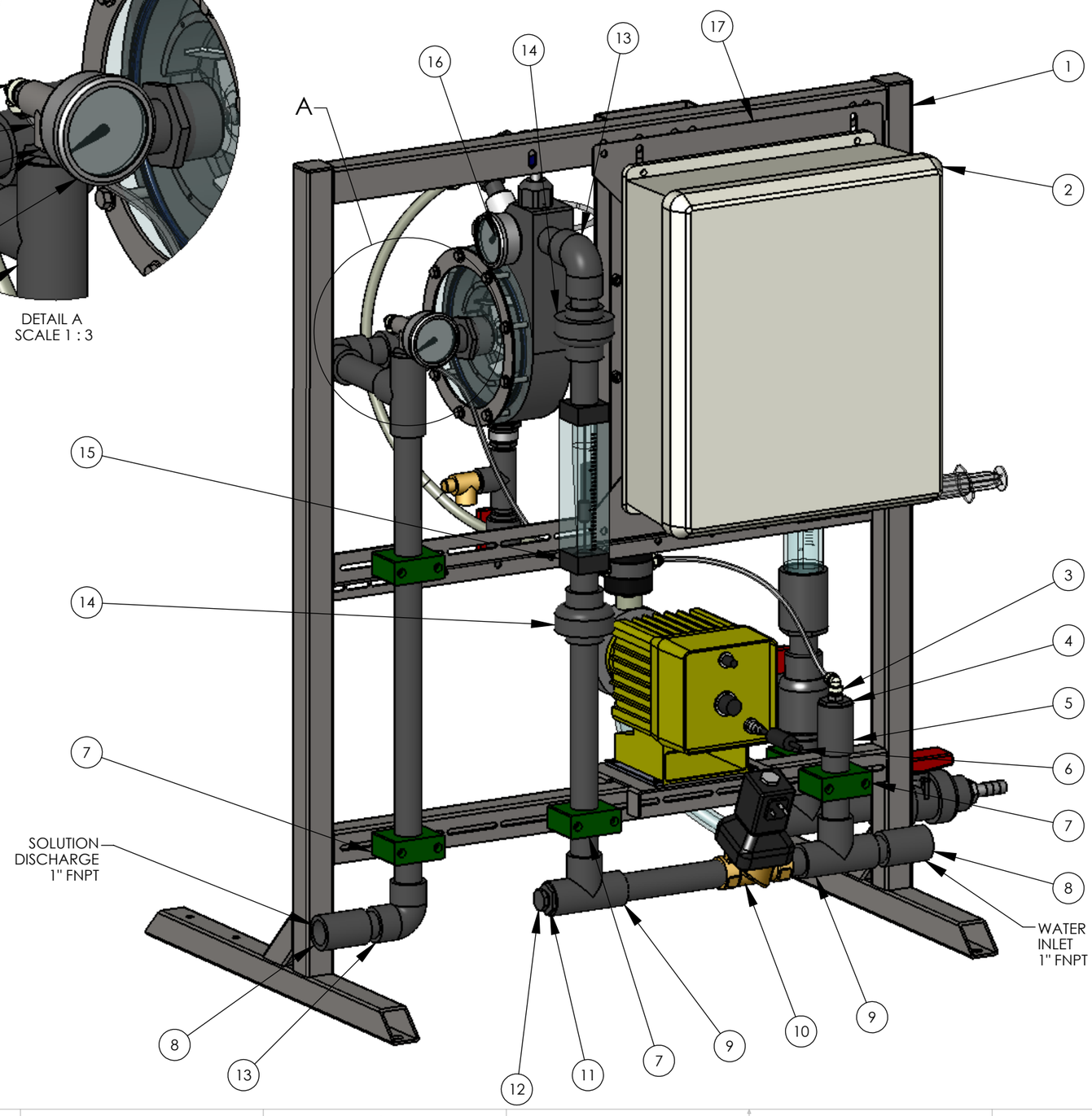

NOTES -

1) DRY WEIGHT APPROXIMATELY 200 LB

2) FOLLOW O&M PROCEDURES FOR DRAINING PRIOR TO STORAGE OR SHIPMENT

3) ITEM 41 NOT SHOWN

ITEM #	NUMBER	DESCRIPTION	QTY
1	158-0432	FRAME, VELOBLEND, 3 SPAN, 18X16	1
2	970-3001	CONTROL PANEL ASSY, VM-D-C, STND	1
3	194-1326	ELBOW, 1/4" TUBE - 1/4 MNPT, PP	2
4	194-2012	REDUCER, BUSHING, 1" X 1/4", SXT, SR, SCH 80, PVC	2
5	194-0445	COUPLING, 1", SXS, PVC	1
6	290-0091	DEWCO PUMP CABLE 4-PIN	1
7	194-0027	CLAMP, PIPE, 1", STAUFF	5
8	194-0627	ADAPTER, FEMALE, 1", S XT, SCH 80, PVC	2
9	194-0314	TEE, 1" SOC, SCH 80, PVC	4
10	248-0039	VALVE, SOLENOID, 1" FNPT, BRASS	1
11	194-0690	REDUCER, BUSHING, 1" X 1/2", SXT, SCH 80, PVC	2
12	194-0407	PLUG, 1/2" , T, SCH 80, PVC	2
13	194-0621	ELBOW, 90, 1", S X S, SCH 80, PVC	3
14	194-0642	UNION, 1", SXS, PVC/VITON	3
15	182-0088	FLOW METER, ROTAMETER, 20 GPM, 1" FNPT	1
16	182-0002	GAUGE, PRESSURE, 2.5", 160 PSI, SS/BRASS, 1/4" MNPT, BACK MNT, GLYCERINE FILL	2
17	158-0438	PLATE, MOUNT, SMALL ENCLSR, VELOBLEND	1
18	194-0023	NIPPLE, 1/4" X CLOSE, 304	1
19	194-0587	TEE, 1/4", T X T X T, 304	1

UNLESS OTHERWISE SPECIFIED DIMENSIONS ARE IN INCHES
TOLERANCES:
DECIMALS .XX = ±.015 .XXX = ±.005
ANGLES ± 1°
63 √ MINIMUM
FILLET RADII TO BE .005 MAXIMUM
BREAK ALL EDGES .005/.010
MATERIAL
FILENAME VM-4.5D-1200-C
DO NOT SCALE DRAWING

CAD GENERATED DRAWING, INTERPRET DRAWING PER ANSI Y14.5M - 1994

APPROVALS	DATE
MODELED C GRAY	
DRAWN C GRAY	
PROJECT MGR W WHITROCK	
PURCHASING MGR J MITCHELL	
QUAL ENG	

VELODYNE
VELOCITY DYNAMICS, INC.

VELOBLEND, 4.5 GPH POLY, 20 GPM H2O, C CTRL

SIZE B | DWG. NO. VM-4.5D-1200-C | REV. B+

SCALE 1:6 | CAD FILE: | SHEET 1 OF 3

THE INFORMATION CONTAINED IN THIS DRAWING IS THE SOLE PROPERTY OF VELOCITY DYNAMICS, INC. ANY REPRODUCTION IN PART OR WHOLE WITHOUT THE WRITTEN PERMISSION OF VELOCITY DYNAMICS, INC IS PROHIBITED

NOTE: DRAWINGS ARE FOR GENERAL LAYOUT USE ONLY. SEE PROPOSAL FOR DETAILS OF THE PROPOSED SCOPE OF SUPPLY.

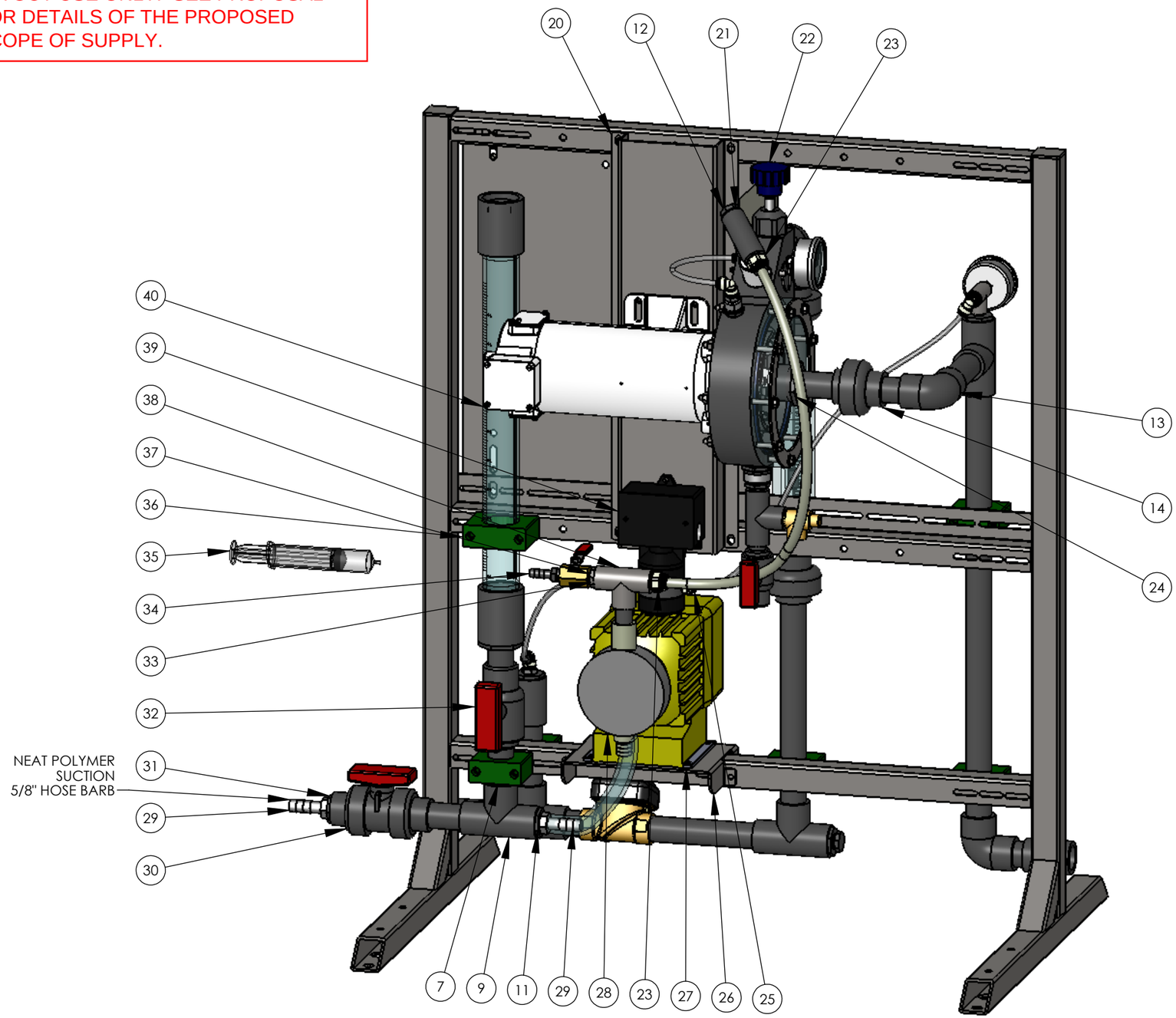

ITEM #	NUMBER	DESCRIPTION	QTY
20	158-0426	BRACKET, MIXER MOUNT, VELOBLEND, UNIVERSAL	1
21	194-0304	TEE, 1/2", T X T X T, SCH 80, PVC	1
22	200-0143	VELOBLEND, 6", ACTIVE, PVC, 1/2 HP, 90 VDC	1
23	194-0638	ADAPTOR, 1/2" TUBE - 1/2 MNPT, ACETAL	2
24	194-0688	REDUCER, BUSHING, 1.5" X 1", TXT, SCH 80, PVC	1
25	194-0641	ADAPTER, 1/4" TUBE - 1/4 MNPT, ACETAL	2
26	158-0436	SHELF, PUMP, DIAPHRAGM, VELOBLEND	1
27	104-0003	BRACKET KIT, DIAPHRAGM PUMP	1
28	215-0051	PUMP, DIAPHRAGM, 4.5 GPH, LCD DISPLAY, 4-20mA PACING	1
29	194-0632	HOSE BARB, 1/2" , PVC, HOSE XMPT	2
30	248-0004	VALVE, BALL, 1" SOC - 1" FNPT, TRUE UNION, PVC/VITON	1
31	194-0405	REDUCER, BUSHING, 1" X 1/2", TXT, SCH 80, PVC	1
32	248-0003	VALVE, BALL, 1" NPT, COMPACT, PVC/VITON	1
33	248-0001	VALVE, BALL, 1/4" MNPT - 1/4" FNPT, BRASS	1
34	194-0637	HOSE BARB, 1/4" X 1/4", POLY, HOSE X MNPT	1
35	215-0067	SYRINGE, PRIMING, DIAPHRAGM PUMP	1
36	194-0026	CLAMP, PIPE, 1.5", STAUFF	1
37	194-0257	REDUCER, BUSHING, 1/2" X 1/4", TXT, 304	1
38	194-0021	TEE, 1/2" FNPT, 304	1
39	182-0272	SWITCH, PRESSURE DIFF, ASHCROFT, D4-24-B-60PSI	1
40	110-0003	CALIBRATION COLUMN, 500 ML, 1" FNPT	1
41	200-0045	ORIFICE, THROTTLE VALVE, .385", 20 GPM, 6" BLENDER	1

VELODYNE
VELOCITY DYNAMICS, INC.

VELOBLEND, 4.5 GPH POLY,
20 GPM H2O, C CTRL

SIZE	DWG. NO.	REV.
B	VM-4.5D-1200-C	B+

SCALE 1:6 | DO NOT SCALE DRAWING | SHEET 2 OF 3

THE INFORMATION CONTAINED IN THIS DRAWING IS THE SOLE PROPERTY OF VELOCITY DYNAMICS, INC. ANY REPRODUCTION IN PART OR WHOLE WITHOUT THE WRITTEN PERMISSION OF VELOCITY DYNAMICS, INC IS PROHIBITED

NOTE: DRAWINGS ARE FOR GENERAL LAYOUT USE ONLY. SEE PROPOSAL FOR DETAILS OF THE PROPOSED SCOPE OF SUPPLY.

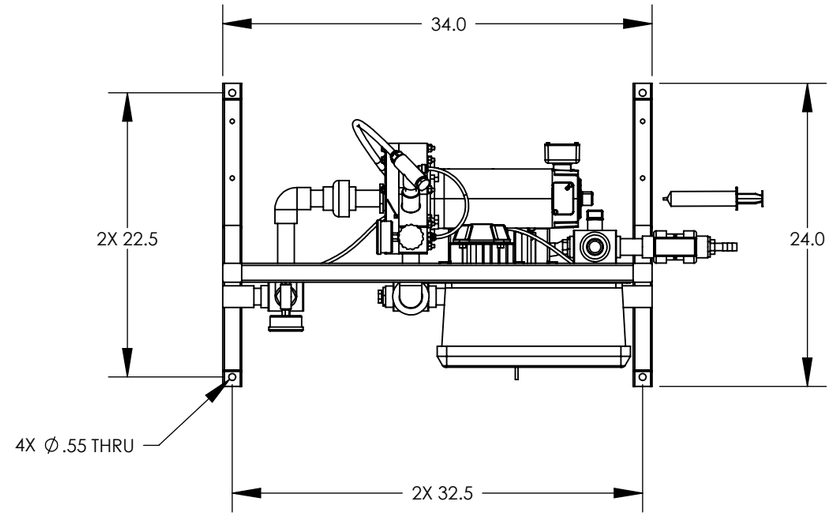

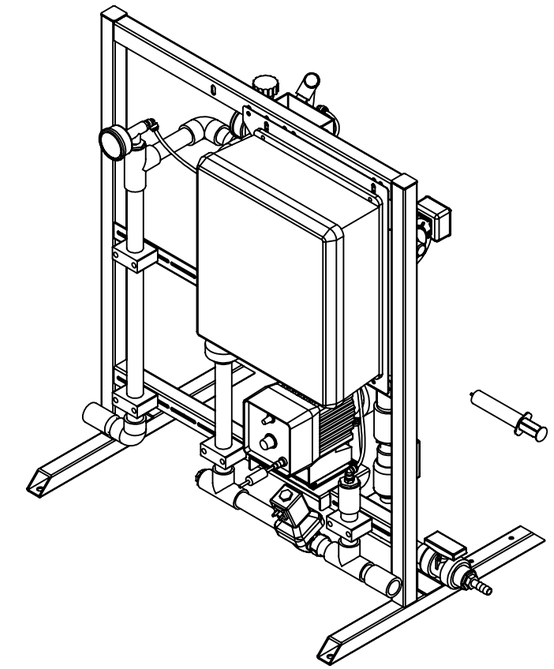

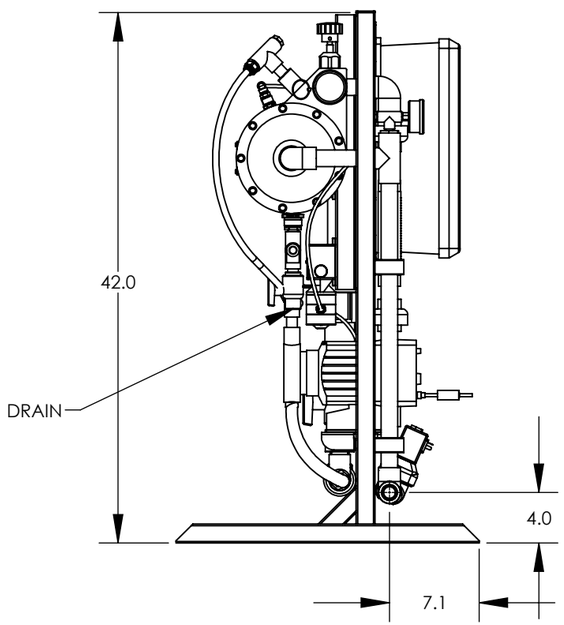

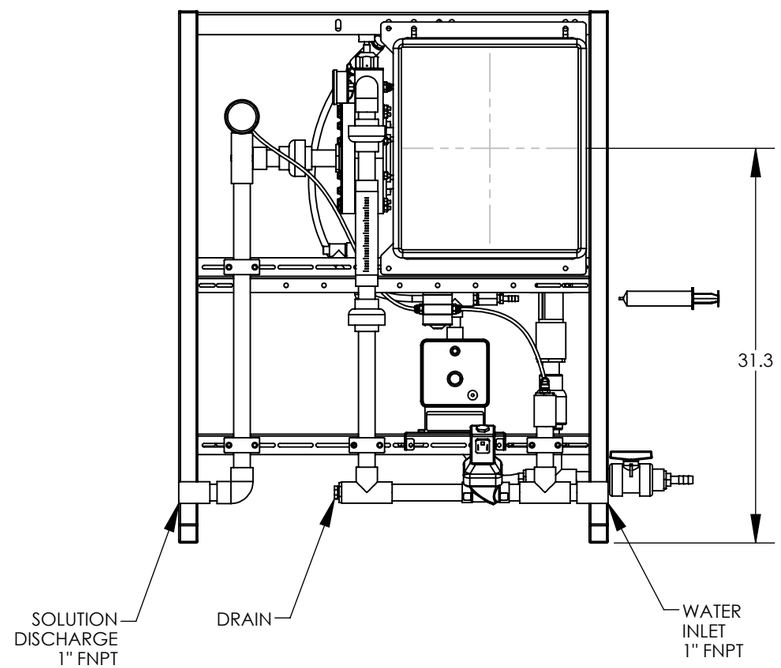

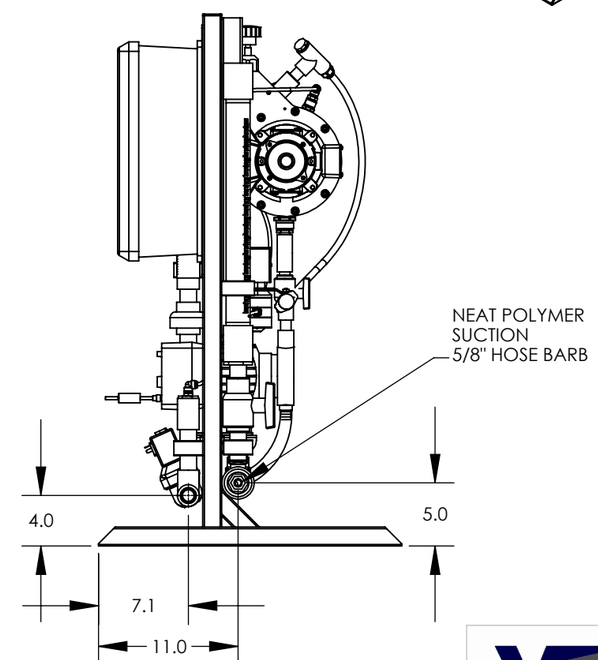

VELODYNE
VELOCITY DYNAMICS, INC.

VELOBLEND, 4.5 GPH POLY, 20 GPM H2O, C CTRL

SIZE	DWG. NO.	REV.
B	VM-4.5D-1200-C	B+

SCALE 1:12 DO NOT SCALE DRAWING SHEET 3 OF 3

Budget Proposal

Date of Proposal: June 1, 2016

Proposal #: 304225

Revision: 0

Proposal For:
Lauren Handell, P.E.
TetraTech, Inc
Cell: 404.9093589
Direct: 770.738.6053
Lauren.Handell@tetratech.com

Project: Deltona, FL RWF

Equipment: VeloBlend Liquid Polymer Activation System

Specification Section: 11250

Bid Opening:

Engineer: Tetra Tech Inc.

Represented by:
Sam Gutridge
EnviroSales of Florida, Inc.
Cell: (863) 381-1875
E-mail: sam@envirosalesofflorida.com

Furnished By:
Application Engineer: David A. Purcell
Sales Manager: Ron Bowman
Velocity Dynamics, LLC (VeloDyne)
Louisville, CO 80027
Phone: (303) 530-3298
dpurcell@polymersolution.com

PROPOSED SCOPE OF SUPPLY

Bid Type: Velocity Dynamics is a named supplier in the specifications.

Velocity Dynamics, LLC. is pleased to offer the following proposal for the liquid polymer blending equipment, including options and accessories as indicated below.

QTY.	DESCRIPTION
1	**VeloBlend Model VM-4PS-600-Ex-0-A-1 Liquid Polymer Blending System**

Dilution Water Flow: 1 to 10 GPM
Polymer Flow Range: 0.04 to 4 GPH

Each unit shall include the following unless otherwise indicated:

1 Polymer Mixing Chamber:
- A. Series: VeloBlend VM
- B. Type: Staged Hydro-Mechanical
- C. Mixer Motor: ½ HP, 90 VDC, 1750 RPM, Wash-down duty
- D. Mixer Shaft Seal: Mechanical with seal flushing assembly
- E. VeloCheck™ Neat Polymer Check Valve with Quick Release Pin
- F. Construction:
  1. Body: Stainless steel
  2. Impeller: Stainless steel
  3. Mechanical Seal: Ceramic, Carbon, Stainless steel, Viton
  4. Cover: Clear polycarbonate with stainless steel reinforced flange & discharge
- G. Pressure Rating: 100 psi
- H. Pressure Relief Valve: Brass

1 Neat Polymer Metering Pump Assembly:
- A. 1/2” NPT polymer inlet connection
- B. Type: Peristaltic tube type (Blue-White)
- C. Tube failure detection
- D. Loss of polymer flow sensor
- E. Metering pump calibration assembly with isolation valves: 250 ml
- F. Plumbing: SCH. 80 PVC

1 Dilution Water Inlet Assembly shall be provided, including the following:
- A. 1” FNPT Stainless steel water inlet connection
- B. Dilution water ON/OFF solenoid valve
- C. Control Valve: Manual rate control valve
- D. Primary dilution water flow meter type: Rotameter
- E. Low differential pressure alarm switch
- F. 0-160 psi inlet water pressure gauge (stainless steel, liquid filled)
- G. Plumbing – SCH. 80 PVC

1 Solution Discharge Assembly:
- A. 1” FNPT Stainless steel solution discharge connection
- B. 0-160 psi solution discharge pressure gauge (stainless steel, liquid filled)
- C. Plumbing – SCH. 80 PVC

VeloDyne – Velocity Dynamics, LLC. 543 S. Pierce Ave., Louisville, CO 80027 (P) 303.530.3298 www.polymersolution.com

1 Control Panel

A. Enclosure: NEMA 4X (FRP)
B. Power:
    1. Required: 120 VAC, 60 Hz., 1 Ph
    2. Disconnect: 10' power cord with 120VAC plug
C. Motor controllers:
    1. Mixing Chamber
D. Miscellaneous:
    1. Control circuit protection
    2. Control relays
    3. Power supplies
    4. Grounding blocks
    5. Numbers terminal blocks
    6. Wire labels, shrink-tube type

(Series Ex)

E. Operator Interface – Discrete Selector Switch
    1. System ON / OFF(reset) / REMOTE
    2. Pump Speed Adjustment (located on metering pump)
    3. One-Turn Potentiometer – Mixer Speed Control
F. Status / Alarm Indicators:
    1. System Running Indication
    2. Main Power ON Indication
    3. LCD Display of Metering Pump Rate (located on metering pump)
    4. Low Water Differential Pressure Alarm
    5. Low Polymer Flow Alarm
    6. Tube Failure Detection Alarm
G. Inputs (signals by others):
    1. Remote Start / Stop (discrete dry contact)
    2. Pacing Signal Based on Process Flow (4-20mA)
H. Outputs:
    1. System Running (discrete dry contact)
    2. System Remote Mode (discrete dry contact)
    3. Common Alarm (discrete dry contact)
    4. Polymer Pump Rate (4-20mA)

1 System Skid:

A. Frame: 304 stainless steel, open frame design for access to all components
B. Fasteners: 316 SS hardware
C. Designed for bolt-down

1 Spare Parts (quantities shown are total for project – provided loose for field installation):

A. (1) Mixing chamber mechanical seal
B. (1) Set mixing chamber O-rings
C. (1) Neat polymer check valve
D. (1) Neat polymer metering pump tube

1 Accessories (quantities shown are total for project – provided loose for field installation):

A. (1) Tote mixer with timer
B. (1) Tote mixer wall mount with drip pan
C. (1) Tote suction assembly
D. (1) Dilution inlet water pressure regulating valve - 1" bronze

1 Engineering:

Submittals:

A. Complete submittal package for approval

O&M Manuals:

A. Five (5) hard copy and CD versions for approval (if required)
B. Two (2) final hard copy and CD versions per system

1 Start-Up / Field Services:

A. Factory Start-Up & Field Services:

1. Number of Trips: One (1) Trip
2. Number of Days: Two (2) Days

Note: four (4) weeks notice required prior to factory services being scheduled

Clarifications:

1. **Any equipment or appurtenances not specifically listed in the scope of supply shall be provided by others.**
2. **Not included in this proposal: Installation. Chemicals. Interconnecting wiring, conduit, piping, valves. Anchor bolts. Field Painting. Taxes. Bonds.**
3. **VeloDyne has proposed its' standard equipment modified only to the extent to meet the functional intent of the project requirements as interpreted by VeloDyne. Where there are contradictions within the project specifications or omissions, VeloDyne is providing what is detailed in our scope of supply. VeloDyne's scope of supply meets the full functional intent of the specification.**
4. **This proposal is based on equipment delivery within one year of date of customer's purchase order.**
5. **The VeloBlend unit shall be provided with a 4 GPH Blue-White peristaltic neat polymer metering pump.**
6. **Post dilution is not recommended or required for the VeloBlend unit. Post dilution and static mixer are not provided herein.**
7. **The VeloBlend unit shall be provided with dilution water rotameter type flow meters.**
8. **The VeloBlend unit shall be provided with discrete type controls and control panel.**
9. **The VeloBlend unit shall be provided with a ½ HP 90 VDC, 1750 RPM wash-down duty variable speed mixer motor. Motor speed shall be controlled by an SCR type motor controller.**

Commercial Terms Summary (see complete terms & conditions attached)

1. Price Valid For 90 Days
2. Payment Terms: Net 30
3. Freight: FOB Destination, Pre-Pay & Add
4. *Submittals: 6-8 weeks after acceptance of order
5. *Shipment: 6-8 weeks after acceptance of order or customer's written approval and release for production

** Note: lead times are estimates based on the current engineering and production work load at the time of bid. Actual lead times may vary based on the work loads at the time of order and release for production – consult factory at time for order and release for production to confirm lead times.*

Total Budget Price per the above Scope of Supply: $<u>23,280</u> +/- 10%

VELODYNE STANDARD TERMS & CONDITIONS OF SALE

All orders placed with Velocity Dynamics, LLC. d/b/a VeloDyne (the "Company" or "Seller"), if accepted, shall be accepted subject to VeloDyne Standard Terms and Conditions of Sale ("Terms and Conditions") as set forth below and incorporated by reference into the Purchase Contract:

1. **CONTRACT; OFFER AND ACCEPTANCE**. These Terms and Conditions, together with the product descriptions, prices and other terms appearing on the face hereof or in a separate document submitted to you, (collectively, "our Quotation"), as such may result in a final Purchase Contract between us (all such documents collectively referred to as the "Contract"), shall constitute the only terms and conditions of our offer. If our Quotation is submitted in response to an offer made by you, whether your offer is in the form of a request for proposal or otherwise, our Quotation is expressly conditioned on your acceptance of these Terms and Conditions, which are incorporated into any offer, acceptance, response, acknowledgment, invoice, amendment and/or any other document issued by you or the Company in connection with your Order (the "Contract" or "Contract Documents"), and any reference thereto shall include these Terms and Conditions. No waiver, alteration, or modification of these Terms and Conditions shall be valid unless expressly agreed to in writing by the Company. In any event, we object to all additional or conflicting terms and conditions that may appear in your order or other form of acceptance you may submit to us in response to our Quotation. The Company shall supply to Purchaser the equipment and parts (the "Products") in accordance with the design, manufacturing and performance specifications set forth in the Company's Quote and incorporated in the Purchase Contract (including these Terms and Conditions). No representation, promise or warranty of any kind has been made by us except as set forth in the Contract, which conclusively supersedes all prior writings, representations and negotiations with respect thereto. The Company has no obligation to furnish other equipment, materials or services that may be shown in any plans and/or specifications except for those goods actually ordered by you for a project to which the goods ordered herein pertain.

2. **PRICES**. Unless otherwise noted in the Contract, prices are net Ex-Works our facility and firm for 30 days. **Prices do not include**: freight; permitting, licensing and/or export fees; labor charges; storage fees; or taxes. If you require the Company's assistance for installation or set-up, we will invoice you at standard rates (please contact us for current pricing). Regarding taxes as set forth below, you will either (i) pay to the appropriate authority all applicable taxes and other government charges upon the production, sale, shipment or use of the goods and provide us with proof of payment; or (ii) provide us with a tax exemption certificate from the appropriate taxing authorities. You agree to provide us with written proof of payment of taxes (or exemption therefrom) within ninety (90) calendar days of your receipt of the goods. Time is of the essence.

3. **CREDIT AND PAYMENT**. Unless otherwise stated in the Contract, payment terms are net 30 days from the date of our invoice(s). Any payment outstanding beyond sixty (60) calendar days from the date of any Company invoice shall be subject to a late payment charge on the overdue balance in the amount of 1.5% per month calculated on the outstanding payment amount (or such lesser amount as is the maximum rate of interest allowed by law). Purchaser shall be responsible for all reasonable costs (including attorney's fees) incurred by the Company while collecting any delinquent balance. For international shipments, payment terms are cash only (unless otherwise approved in writing by us). The Company may decline to deliver except for cash, or stop goods in transit, should we develop any reasonable doubt as to Purchaser's financial responsibility. Pro-rata payments shall become due with partial shipments. If Purchaser is responsible for any delay in shipment: (a) the Company may treat the date of completion of goods as the date of shipment for purposes of invoice and payment, (b) completed goods shall be held at Purchaser's cost and risk; and (c) Purchaser shall be responsible for reasonable storage and insurance expenses, with storage fees accruing at a rate of two percent (2%) of the Purchase Price per month or $500 per month, whichever is greater, beginning on the first day of the first calendar month following the date the equipment was scheduled to ship. If retainages are accepted by the Company, the retainage shall be based on an agreed upon percentage of the total invoice amount. Unless otherwise agreed in writing, (a) retainage will not be held for more than 180 calendar days from the date of shipment and (b) no retainage will be imposed for approval of shop drawings, O&M manuals or any other documentation.

4. **DELIVERY AND ACCEPTANCE OF PRODUCTS; TRANSFER OF TITLE.**

(A) **Products to be Used in the United States.** Seller will deliver Products manufactured and to be used by Purchaser in the United States Ex-Works at our facility ("Shipping Point") Incoterms 2010, or in such other manner as may be mutually agreed to by us and set forth in separate Shipping Terms under the Contract. On all shipments marked "Ex-Works (or EXW) Shipping Point," the Company shall make the Products available to Purchaser at the Company's facility, which shall constitute delivery, and Purchaser shall bear all costs and risks of moving the Products from our facility to Purchaser's destination. Any claim for loss or damages in transit must be entered with the freight carrier and prosecuted by you.

(B) **Products to be Used Outside of the United States.** Seller will deliver all Products to be used by Purchaser outside of the United States "FAS (Free Alongside Ship) Named Port of Shipment" ("Shipping Point") Incoterms 2010, which means the Company will deliver the Products to the designated port, origin point or designated freight forwarder, with Purchaser bearing all costs and risk of loss or damage from the origin point to Purchaser's destination point outside of the United States. Purchaser shall be responsible for payment of all sales and use taxes, or to recover such taxes through appropriate procedures and documentation under applicable law.

(C) **Shipping**. Goods will be boxed or crated as Seller may deem proper for protection against normal handling, and extra charge will be made for preservation, waterproofing or similar added protection of goods. Routing and manner of shipment will be at Seller's discretion, and may be insured at Purchaser's expense, value to be stated at order price.

(D) **Delivery, Shipment & Installation Dates**. Delivery, shipment and installation dates are estimates only, not guarantees, and unless otherwise specified, are calculated from the date of Seller's receipt of complete technical data and approved drawings as such may be necessary to fulfill the Contract. In estimating such dates, no allowance has been made, nor shall we be liable directly or indirectly, for delays of third-party vendors, carriers or delays from labor difficulties, shortages, strikes or stoppages of any sort, fires, accidents, failure or delay in obtaining materials or manufacturing facilities, acts of government affecting us directly or indirectly, bad weather, or any cause beyond our control or causes designated as Acts of God or forced by any court of law, and the estimated delivery date shall be extended accordingly without penalty to the Company. We will not be liable for any damages or penalties whatsoever, whether direct, indirect, special or consequential, liquidated or otherwise, resulting from our failure to perform or delay in performing. Overtime and other expenses incurred to hasten delivery at Purchaser's request shall be added to the quoted prices and charged to and paid for by Purchaser. Shipment of goods ready for delivery can be deferred beyond the date for delivery on with Seller's written consent.

(E) **Delivery Terms**. Seller's obligation to deliver the goods shall be fulfilled when we have delivered the same in good condition to a carrier at the designated Shipping Point. Unless otherwise specified in the Contract, Purchaser shall be charged with and pay for the costs of all transportation, freight, insurance, loading, packaging and handling charges, taxes, duties, fees, storage, and all other charges applicable to the goods. Purchaser shall not be responsible for any taxes based on Seller's income.

(F) **Title / Security**. Title to the goods shall be retained by Seller as a vendor's lien until such goods are paid for in full by the Purchaser, even though risk of loss shall be borne by Purchaser as set forth in paragraphs 4(A) and (B) respectively. Purchaser herby grants to Seller, and Seller hereby reserves, a purchase money security interest in and to the goods sold to Purchaser, together with all proceeds thereof, to secure Purchaser's payment and performance. Purchaser agrees upon Seller's request to do all acts and execute all documents reasonably necessary to assist Purchaser's perfection and maintenance of any such security title and right of possession including, but not limited to, executing and filing documents with the appropriate governmental agency.

(G) **Cancellation and Returned Equipment**. Orders may be canceled or amended only with our written consent, and must be returned within 30 days of Seller's written authorization at Purchaser's cost. If Purchaser returns the goods in the manner required under the previous sentence, and if the returned goods are (i) in substantially the same condition that existed on the date the Seller delivered the Products to you, undamaged; and (ii) not more than 12 months after the original Invoice date; the returned goods will, subject to the applicable handling charge, be accepted by the Seller for return. Used or discontinued goods or parts or equipment specially manufactured will not be accepted for credit unless specifically agreed to by the Seller in our sole discretion. Purchaser's sole remedy for returns will be a credit for the purchase price less any handling charges. Returned goods are subject to a minimum of 20% restocking and handling charge. Returns found to be free of material and workmanship defects will be held for 30 days and if Purchaser does not provide the Seller with repair or return instructions, then we will scrap or resell the goods. Purchaser will be charged for placing returned goods in saleable condition, any sales expenses then incurred by us, plus a restocking charge and any out-going and in-coming transportation costs which the Company pays.

(H) **Acceptance by Purchaser**. Purchaser shall conduct any incoming inspection tests on delivered Products within 10 days of delivery, and if delivery is made in multiple shipments, then Purchaser shall conduct incoming inspections of Products within 10 days of receipt of each delivery. In the event of a shortage, damage or discrepancy in any shipment, Purchaser shall promptly give notice to Seller in writing (at such address designated by Seller for such purpose) but in no event later than 30 days of the subject delivery, detailing the exact nature of the shortage, damage or discrepancy and provide such supporting documentation as Seller shall deem necessary and appropriate (i.e., photos, insurance reports, etc.). If such evidence indicates, in Seller's reasonable judgment, that such shortage, damage or discrepancy existed at the time of delivery of the goods to the carrier, Seller will promptly deliver additional or substitute goods to Purchaser; provided, however, that Seller may, in its sole and absolute discretion, require Purchaser to return all damaged goods to the Company prior to delivery of substitute goods. If Purchaser shall fail to timely give Seller such written notice, the goods shall be deemed to conform to the requirements of the Contract, and Purchaser shall be deemed to have accepted the goods and shall pay for the goods in accordance therewith.

(I) **Purchaser's Specifications**. Purchaser shall be solely responsible for ensuring that all specifications, drawings, information, advice, recommendations or requests provided to the Company by Purchaser or any of its agents are accurate and suitable for Purchaser's purposes. The Company's examination or consideration of any such specifications, drawings, information, advice, recommendations or requests shall not result in any liability on the part of the Company.

5. **TERMINATION.** The Company shall have the right to cancel for default hereunder all or any part of Purchaser's Order. This right of cancellation is in addition to and not in lieu of any other remedies that the Company may have in law or equity.

6. **TAXES & IMPORT- EXPORT CHARGES.**

(A) **Purchaser's Responsibility for Taxes, Reports and Withholding.** Seller shall be responsible for reporting and paying all state and federal income taxes associated with sales of equipment and products to Purchaser under this Contract. However, Purchaser shall be responsible for all liabilities or claims for taxes that any taxing authority having jurisdiction over this Contract may assess or levy relating to the Products or this Contract. Purchaser shall comply with all applicable tax requirements, file all registrations (including all Transaction and Sales Tax registrations) and reports, and take all actions necessary to make its tax payments (or secure exemptions from or reductions in payments of same). Within 90 days from the date of any payment by Purchaser under Seller's Invoice, Purchaser shall provide Seller with tax receipts (or other proof of payment or written evidence of tax exemption) for all taxes to be paid by Purchaser under this Contract.

(B) **Import and Export Charges.** Purchaser shall be solely responsible for all import and export charges, licenses, permits ad any other lawfully payable charge related to the import or export of Products under this Contract.

(C) **Export Controls & Related Regulations.** Purchaser represents and warrants that it is not designated on, or associated with, any party designated on any of the U.S. government restricted parties lists, including without limitation, the U.S. Commerce Department Bureau of Industry and Security ("BIS") Denied Persons List; Entity List or Unverified List; the U.S. Treasury Department Office of Foreign Assets Control ("OFAC") Specially Designated Nationals and Blocked Persons List; or the U.S. State Department Directorate of Defense Trade Controls ("DDTC") Debarred Parties List. Purchaser shall comply with all applicable U.S. economic sanctions and export control laws and regulations, including without limitation, the regulations administered by the OFAC, the Export Administration Regulations administered by BIS, and the International Traffic in Arms Regulations administered by DDTC. Seller may terminate this Contract and discontinue any ongoing supply to or business with Purchaser immediately, without notice and without liability, upon Seller becoming aware that Purchaser is named on any restricted party list.

7. **WARRANTY; LIMITED REMEDIES.**

(A) **Seller Warranties.** Seller shall provide the standard warranties provided in the form Warranty Agreement (a copy of which is attached and incorporated by reference into our Contract).

(B) **Assignment.** Seller assigns to Purchaser all warranties given by manufacturers and vendors of Seller as such relate to the Products (equipment or components). These warranties are not exclusive.

(C) **Limitation on Damages**. Other than as set forth in Paragraph 9 (Purchaser Indemnification) and any breaches of Paragraph 11 below (Confidentiality), each party's cumulative liability for damages to the other party for any cause whatsoever, and regardless of the form of action, whether in contract or in tort, including but not limited to, negligence, shall be limited to the total Contract price of the goods sold hereunder, plus or minus, as applicable, the amounts of all unpaid accounts payable and receivable between the parties. In no event shall Seller's liability exceed the limits of the Company's insurance coverage.

8. **SOLE REMEDY.** The sole and exclusive remedy for breach of any non-warranty obligation of the Company and the sole remedy for the Company's liability of any kind (including negligence) with respect to the goods and services provided to Purchaser shall be to use all commercially reasonable efforts to promptly cure such breach. Purchaser must prosecute any claim for a cause of action arising hereunder with one year from the date on which the facts that gave rise to the cause of action first occurred subject to the terms set forth in Section 14 (Governing Law and Resolution of Disputes).

9. **INDEMNIFICATION.** Purchaser shall hold harmless, indemnify and defend the Company (at the Company's request) for any and all damages, liabilities, costs and expenses (including the costs of any dispute resolution, including but not limited to, attorneys' fees and any other costs and expenses), fines, or losses in connection with any threatened or actual claims, actions, demands, investigations, suits, including but not limited to, claims or suits by third parties, arising out of any of the following: (a) Purchaser's negligent or willful acts, or those of its employees and/or agents, (b) such goods being repaired or altered by persons other than Seller (unless expressly authorized in writing by the Seller), (c) any claim of patent infringement arising out of the manufacture by Seller of goods created in accordance with a design or specifications furnished to Seller by Purchaser, (d) in the event that Purchaser modifies, or combines with any non-Seller goods,

any of the goods purchased from Seller, and such modification or combination results in the actual or alleged infringement of any intellectual property rights of any third party, (e) from goods produced by Seller according to Purchaser's specifications, (f) any violations of export control laws by Purchaser, (g) any violations of state or federal tax laws by Purchaser, or (h) Purchaser's breach of any provisions of these Terms and Conditions.

10. **SELLER'S INTELLECTUAL PROPERTY INDEMNIFICATION.** Seller will defend, indemnify and hold harmless Purchaser from and against any and all loss, damage, cost or expense arising as a result of any claim that the goods sold hereunder infringe any third party U.S. patent, copyright, trademark, trade secret or intellectual property right. Otherwise, Seller will not be liable for any claim of infringement. If you notify us promptly of any such claim of infringement and, if we so request, authorize us to defend or settle any suit or controversy involving such claim, we will indemnify you against the reasonable expenses of any such suit and will satisfy any judgment or settlement in which we acquiesce, but only to an amount not exceeding the price paid for the allegedly infringing goods. If an injunction is issued against the further use of allegedly infringing goods, the Company shall have the option of procuring for you the right to use the goods, or replacing them with non-infringing goods, or modifying them so that they become non-infringing or of removing them and refunding the purchase price. The foregoing states the Company's entire and exclusive liability with respect to a claim of infringement, and we will not be liable for any damages whatsoever suffered by reason of any infringement claimed, except as provided herein.

11.**CONFIDENTIALITY.**"Confidential Information" means any of the Company's business information, specifications and all related writings, drawings, designs, software applications and similar works or any other information disclosed by the Company that are disclosed as "Confidential" or proprietary. All Confidential Information shall be the exclusive property of the Company and we retain all right, title and interest in and to the same. Purchaser agrees to use Confidential Information for the exclusive purpose of performance under the Contract and not to disclose or provide any Confidential Information to any third party and to take all necessary measures to prevent any such disclosure by its employees, agents, contractors or consultants. Upon request of the Company or completion of the Contract, Purchaser shall return all Confidential Information to the Company and provide certification of such return.

12. **TOOLING; SPECIAL JIGS, FIXTURES & PATTERNS**. Charges made for tools, jigs, fixtures, patterns and equipment made or acquired by the Company in connection with your Order and utilized in manufacturing will be considered the exclusive property of the Company, without credit to Purchaser.

13. **INSPECTION, RECORDS, AUDITS & PROPRIETARY DATA.** Inspection of goods in our facility by Purchaser and/or its representative will be permitted, provided that (a) Purchaser gives reasonable written notice of its desire to inspect the goods, and (b) the inspection does not unduly interfere with the Company's production work flow. Neither Purchaser nor any of Purchaser's representatives shall have any right to examine or audit the Company's cost accounts, books or records of any kind, or be entitled to, or have control over, any engineering or production prints, drawings or technical data which the Company, in our sole discretion, may consider in whole or in part to be proprietary to our business.

14. **GOVERNING LAW & DISPUTE RESOLUTION.**

(A) **Governing Law.** The Contract and these Terms and Conditions are governed by and interpreted under the laws of the State of Colorado, without regard to its choice of law rules unless the matters in dispute come within the scope of Article 2 of the Uniform Commercial Code (UCC-Sales) prepared under the joint sponsorship of The American Law Institute and the National Conference of Commissioners on Uniform State Laws, in which event the dispute shall be governed by and interpreted under the referenced Code in effect on the date of this Contract.

(B) **Dispute Resolution.** Except for any action where the sole relief sought is an injunction, any controversy or claim arising out of or relating to the Contract and these Terms and Conditions, or the making, performance or interpretation hereof, and the dispute cannot be settled by direct negotiations, either Party may initiate mediation. If the parties fail to settle the dispute within 30 days of notice of mediation, either party may initiate binding arbitration under this paragraph. The place of arbitration shall be in the Boulder-Denver Metro-Area of Colorado, and shall be conducted by one arbitrator in accordance with the Commercial Arbitration Rules of the American Arbitration Association. Judgment upon any binding arbitration award may be entered in any court having jurisdiction thereof.

15. **GENERAL PROVISIONS.**

(A) **Prior Agreements.** This Contract comprises the complete and exclusive agreement between the parties regarding the subject matter of this Contract, and supersedes all oral and written communications, negotiations, representations or agreements made or entered into before the Effective Date.

(B) **Amendments.** No amendment to this Contract is effective unless made in writing and signed by authorized representatives of Purchaser and Seller. Specifications, drawings, price lists and documents of a technical nature prepared by Seller and submitted to Purchaser to describe the equipment and parts being purchased hereunder automatically become part of this Contract.

(C) **Survival.** All provisions set forth herein regarding warranty, confidential information, indemnification, liability and limits thereon, and any other provisions that survive on their terms including all provisions relating to tax, import / export, inspection, dispute resolution and governing laws, and all causes of action which arose prior to completion or termination of this Contract shall survive indefinitely until, by their respective terms, they are no longer operative.

(D) **Conflicts.** If a conflict exists between these Terms and Conditions and any other writings connected with this Contract, these Terms and Conditions shall prevail with respect to such conflict. In the event that any provisions of these Terms and Conditions is held to be illegal, invalid or unenforceable under the present or future law, rule or regulation, such provision shall be deemed stricken from these Terms and Conditions, but such illegality, invalidity or unenforceability shall not invalidate any of the other provisions of these Terms and Conditions.

VeloDyne – Velocity Dynamics, LLC. 543 S. Pierce Ave., Louisville, CO 80027 (P) 303.530.3298 www.polymersolution.com

6. Ground Storage Tank

THE CROM CORPORATION
PRESTRESSED CONCRETE TANKS
BUILDING TANKS SINCE 1953

James D.Copley, PE, CEO
H.E.Puder
James A.Neff, PE
Lars O.Balck, Jr., PE
Gerald C.Bevis, PE
Jeffery D.Malpass, PE
Joseph C.Swann, PE
Walter R.Carlton, CPA
Robert G.Oyenarte, PE
James M.Wornick
Talmadge B. Mincey, PE
J. Brandon Lawhern, PE
Stephen M. Crawford, PE
Christopher T. Mincey, PE

June 2, 2015

Via Email: rasesh.shah@tetratech.com

Rasesh Shah, PE
Tetra Tech
201 East Pine Street, Suite 1000
Orlando, FL 32801-2763

Re: Preliminary Estimate
1,000,000-Gallon Reuse Water Storage Tank
City of Deltona, Volusia County, Florida
CEN 2015-E-076

Dear Rasesh:

We are pleased to prepare the following Crom tank estimate for your upcoming project. The estimate is based on open-shop labor conditions with our crews performing construction in 2015.

- One 1,000,000-Gallon Domed Prestressed Concrete Tank $557,000
  85'-0" ID x 23'-7" SWD

The above estimate includes the complete design and construction of the tank structure with standard 6" thick membrane floor, prestressed concrete wall and 1/10th rise free-span concrete dome. Tank design includes accommodation of 1'-0" uniform “wet” backfill. Also included in the estimate are the following accessories and features:

- Fiberglass accessories including dome ventilator, dome access hatch cover, interior ladder, two 16" flange flares, and liquid level indicator.
- Aluminum accessories including exterior ladder and dome handrail at the access hatch cover, anodized.
- Stainless steel accessories including access wall manhole, two pipe brackets for 16" DI overflow pipe and vortex baffle for 16" DI effluent pipe (pipe by others)
- Precast overflow vents with 24/24 polyester screen mesh, minimum four and two 8" PVC pipes cast in concrete curbs.
- Cast-in-place concrete dome parapet wall: 12" high x 6" thick.
- Grout on dome at high point between overflows to overflow edge for water diversion.
- Fall protection in compliance with OSHA requirements for the exterior and interior ladders.
- Exterior coating system consisting of two coats Tnemec Series 156 modified waterborne acrylate.

The preliminary pricing does not include the costs of subsurface exploration, piles, site preparation, piping, mechanical or electrical equipment, material testing, disinfection, instrumentation, sanitary, trash removal, final landscaping or dewatering. These costs, of course, need to be included in your overall budget estimate.

250 S.W. 36TH TERRACE • GAINESVILLE, FLORIDA 32607-2889
PHONE 352-372-3436 • FAX 352-372-6209 • www.cromcorp.com

We look forward to working with you as this project progresses. If you need additional information or have any questions regarding the inclusions or exclusions in our pricing, please contact me directly at 352.262.4136 or via email at jmw@cromcorp.com.

Sincerely,

CROM, LLC

James M. Wornick
Vice President

/das

CROM PRESTRESSED CONCRETE TANKS
DESIGNING AND BUILDING TANKS SINCE 1953

June 2, 2015
Revised September 1, 2015

Via Email: rasesh.shah@tetratech.com

Mr. Rasesh Shah, PE
Tetra Tech
201 East Pine Street, Suite 1000
Orlando, FL 32801-2763

Re: Preliminary Estimates
1,000,000-Gallon-Reuse Water Storage Tank **and**
3,000,000 and 5,000,000-Gallon Ground Storage Tanks
City of Deltona, Volusia County, Florida
CEN 2015-E-076

Dear Rasesh:

We are pleased to prepare the following Crom tank estimates for your upcoming project. The estimates are based on open-shop labor conditions with our crews performing construction in 2016.

- One 1,000,000-Gallon Domed Prestressed Concrete Tank 85'-0" ID x 23'-7" SWD — $ 557,000
- **One 3,000,000-Gallon Domed Prestressed Concrete Tank 147'-2" ID x 23'-7" SWD — $1,085,000**
- **One 5,000,000-Gallon Domed Prestressed Concrete Tank 190'-0" ID x 23'-7" SWD — $1,619,000**
- **One 5,000,000-Gallon Domed Prestressed Concrete Tank 150'-0" ID x 37'-10" SWD — $1,426,000**

The above estimates include the complete design and construction of the tank structure with standard 4" thick membrane floor, prestressed concrete wall and 1/10th rise free-span concrete dome. Tank design includes accommodation of 1'-0" uniform “wet” backfill. Also included in the estimate are the following accessories and features:

- Fiberglass accessories including dome ventilator, dome access hatch cover, interior ladder, and liquid level indicator.
- Aluminum accessories including exterior ladder and dome handrail at the access hatch cover, anodized.
- Stainless steel accessories including access wall manholes, minimum two and two pipe brackets for DI overflow pipe (pipe by others).
- Precast overflow vents with 24/24 polyester screen mesh, minimum four and one 8" PVC pipe cast in concrete curb.
- Fall protection in compliance with OSHA requirements for the exterior and interior ladders.
- Exterior coating system consisting of two coats Tnemec Series 156 modified waterborne acrylate.

250 S.W. 36TH TERRACE • GAINESVILLE, FLORIDA 32607-2889
PHONE 352-372-3436 • FAX 352-372-6209 • www.cromcorp.com

The preliminary pricing does not include the costs of subsurface exploration, piles, site preparation, piping, mechanical or electrical equipment, material testing, disinfection, instrumentation, sanitary, trash removal, final landscaping or dewatering. These costs, of course, need to be included in your overall budget estimate.

We look forward to working with you as this project progresses. If you need additional information or have any questions regarding the inclusions or exclusions in our pricing, please contact me directly at 352.262.4136 or via email at jmw@cromcorp.com.

Sincerely,

CROM, LLC

James M. Wornick
Vice President

/das

September 4, 2015

CECS NO. 15-190

BUDGET PRICING

UNDER FLOOR PIPE & RISER ADDITION
1.0-MG REUSE WATER STORAGE TANK
ALEXANDER AVENUE PUMP STATION
DELTONA, FLORIDA

Crom Engineering and Construction Services (CECS) is providing the budget pricing below to provide labor, material and equipment for the modification of the prestressed composite tank as specified below in accordance with all applicable codes and standards including OSHA, AWWA, ACI and standard prestressed composite tank design.

1. SCOPE OF WORK / WORK SEQUENCE

Furnish all supervision, labor, material, equipment, scaffold and forms required to complete the work, except as noted in Paragraph 2 of this document. The services to be furnished are specifically:

A. <u>16" Under Floor Pipe and Riser Addition</u>:

1) Excavation and trench shoring under the tank floor and outside the tank to approximately 8'-0" off of the exterior tank wall. CECS assumes that the center line elevation of the horizontal pipe segment is approximately 3'-0" below grade elevation.

2) Chip out the tank floor for the pipe penetration.

3) Provide and install one 16" DI under floor pipe. CECS to install the pipe materials from the tank interior (approximately 5'-0" off of the interior tank wall) to approximately 5'-0" outside the tank foundation.

4) Provide and install one 16" DI riser pipe. The new pipe materials shall connect to the new 16" DI under floor pipe and terminate at an elevation of 111.00.

5) Provide and install the necessary steel reinforcement in the pipe floor cap.

6) Add four 1’-0” x 1’-0” x 2” thick concrete bosses on the interior tank wall by forming, scarifying the wall and applying a polymer modified cementitious mortar in conjunction with bonding epoxy.

7) Provide and install two stainless steel interior wall pipe brackets and associated hardware.

8) Form and pour the pipe encasement and the pipe cap on tank floor. The pipe encasement shall terminate approximately 1’-0” outside the tank foundation.

<u>This work shall be performed on the following tank</u>:

- Alexander Avenue Pump Station
  1,000,000-Gallon Reuse Water Storage Tank
  85'-0" ID x 23'-7" SWD
  (Crom Job No. 2014-M-031A)

2. MATERIALS AND SERVICES FURNISHED BY OTHERS

It is understood that the following services shall be provided by others:

A. Adequate access to the tank site including open storage space for our vehicles, equipment and materials, conveniently located near the tank to be modified.

B. A continuous supply of potable water under minimum pressure for the use of the CECS crew within 100’ of the tank site.

C. A continuous supply of electricity during the period of work: one 30-AMP, 110-volt service for the operation of our power tools and accessories, located not more than 100’ from the tank. Please be sure that all circuit breakers are ground-fault protected.

D. Drainage and disposal of the tank’s contents prior to CECS’s arrival. CECS will not be responsible for dewatering.

E. Complete lock out and tag out of the subject tank prior to personnel entering the tank. Client will be required to provide all materials for this process. CECS will review the procedures before entering the tank.

F. Refilling of the tank’s contents.

G. Any permit or other governmental fees as may be required for the work.

3. BUDGET PRICING

16" Under Floor Pipe & Riser Addition: $45,000.00*

***<u>Note</u>: The pricing above is for budgetary purposes only. Actual pricing may vary by as much as 20%.**

Sincerely,

CROM ENGINEERING & CONSTRUCTION SERVICES

Kyle J. Monroe
Chief Estimator / Project Manager

Jeffery D. Malpass, P.E.
President

7. TSS Probe

TSS sc Suspended Solids Family of Sensors

TSS sc probes measure online suspended solids from spring water to corrosive chemicals under the strictest regulatory conditions. With twelve different versions, it is possible to measure Suspended Solids over a wide range of concentrations with just one sensor.

Features and Benefits

One Family for All Applications

With twelve instrument versions and thirty different mounting styles, the Hach TSS sc probes can measure on-line Suspended Solids in virtually all applications under the strictest regulatory conditions.

TSS sc and TSS W sc probes are made of polished stainless steel with a scratch resistant and easy to clean sapphire window design to withstand harsh environments and keep particles from sticking to the surface. For high solids environments, the Hach TSS W sc is equipped with a wiper to maintain accuracy.

TSS HT sc optics and electrical systems are coated with a special material to withstand operating temperatures of 90°C and pressures of up to 10 Bar. The ability to withstand these conditions without the hassle of flow-through cells or cooling lines makes it the probe of choice for process control.

TSS XL sc and TSS VARI sc probes have been specially designed for measurement of Suspended Solids under the high hygienic requirements of the food, beverage, and pharmaceutical industry. An aseptic process connection is achieved with the installation of the Varivent® or XL in-line-housing and the acid, alkali-proof, and high temperature stable materials facilitate the use of the probe under CIP conditions.

TSS TITANIUM sc is the only titanium suspended solids probe in the market designed to provide process control in the most difficult environments. While offering the same high quality measuring properties as the TSS sc, its special titanium body enables it to perform in the most extreme applications.

TSS EX1 sc probes have been designed for measurement in hazardous locations with Class I Div 2 requirements. Depending on the application, it is possible to select either an immersion style or insertion style probe.

Two Parameters in One Instrument

The Hach TSS sc probes can measure both on-line Suspended Solids and Turbidity in one instrument. This flexibility enables the measurement of both parameters under the same application.

Method of Detection

The Hach TSS sc probes have a double optical system with two pulsating infrared LEDs and four receivers. As the transmitted light is scattered, the receivers pick up the incident light at 90° and 120° angles effectively doubling the accuracy of the instrument. This eight channel measurement system, with an integrated bubble and temperature compensating software, enables the instrument to have a wide measuring range that effectively covers most applications, from the darkest pre-treated water to the freshest of spring waters, with one instrument.

Stainless Steel

	Description	Type of Mounting
TSS sc	All purpose standard probe for Suspended Solids measurement.	Tank-side mounting - 5
TSS sc TriClamp	All purpose probe with TriClamp.	Weld-on fitting - 3
TSS sc In-line	All purpose probe for simple in-line installation.	Ball valve fitting - 1
TSS W sc	Same performance and functionality as the TSS sc but with a wiper for use in high solids environments.	Tank-side mounting - 5
TSS W sc TriClamp	TSS W probe with TriClamp.	Weld-on fitting - 3
TSS W sc In-line	Standard probe with wiper for simple in-line installation.	Ball valve fitting - 1
TSS HT sc	Suspended Solids probe for use in high temperature environments of up to 90 °C and 95 °C for short intervals.	Tank-side mounting - 5
TSS HT sc TriClamp	High temperature probe with TriClamp.	Weld-on fitting - 3
TSS HT sc In-line	High temperature probe for simple in-line installation.	Ball valve fitting - 1
TSS VARI sc	Suspended Solids probe with flush installation for use in food, pharmaceutical sectors, or in any VARIVENT industrial environment.	VARIVENT measuring tube - 4
TSS XL sc	Suspended Solids probe designed for use in the beverage and food industries.	XL measuring tube - 2
TSS EX1 sc	Suspended Solids and Turbidity probe designed for use in hazardous locations (Class I Div 2).	Tank-side mounting - 5
TSS EX1 sc TriClamp	Suspended Solids and Turbidity probe designed for use in hazardous locations (Class I Div 2).	Weld-on fitting - 3
TSS EX1 sc In-line	Class I Div 2 certified probe for simple in-line installation.	Ball valve fitting - 1

Titanium

	Description	Type of Mounting
TSS TITANIUM2 sc	Suspended Solids probe for use in aggressive or corrosive environments.	User defined
TSS TITANIUM2 sc TriClamp	Titanium2 probe with TriClamp for simple inline installation and quick access for maintenance.	User defined
TSS TITANIUM7 sc	Suspended Solids probe for use brine, seawater, or high salinity environments.	User defined
TSS TITANIUM7 sc TriClamp	Titanium7 probe with TriClamp for simple inline installation and quick access for maintenance	User defined

Types of Mounting

Whether tank-side mounting, inline installation, or hygienic fittings are required, the TSS sc family of probes has suitable mounting solution for any situation.

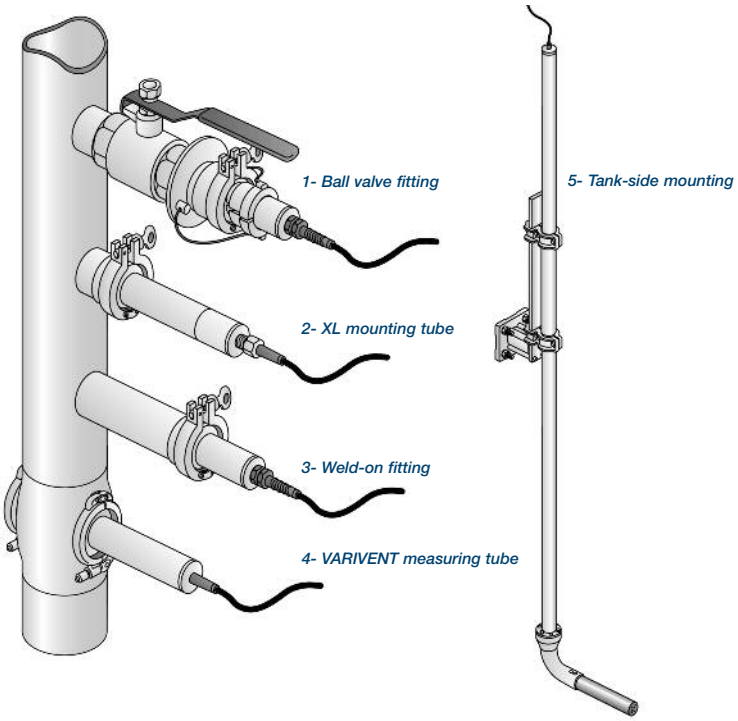

Specifications*

Measurement Method
Combined multiple beam alternating light method with infrared diode system and beam focusing

Turbidity (TRB): 2-channel 90° scattered light measurement in accordance with DIN/EN 27027/ISO 7027, wavelength = 860 nm

Solids (TS): 90° and 120° scattered light measurement, wavelength = 860 nm

Hazardous Locations
TSS EX1 sc Class I Div 2 certified

Measuring Range
Turbidity (TRB): 0.001 to 4,000 FNU

Solids (TS): 0.001 to 500 g/L

With SiO_2 standard solution

Measurement Accuracy
Turbidity (TRB): Up to 1,000 FNU/NTU: <5% of measured value ±0.01 FNU/NTU

Reproducibility
Turbidity (TRB): <3%

Solids (TS): <4%

Response Time
1 s < T90 < 300 s (adjustable)

Calibration
Turbidity (TRB): Factory calibrated

Solids (TS): To be calibrated by customer on site

Zero point: Permanently calibrated in the factory

Pressure Range
<6 bar: TSS W sc

<10 bar: TSS sc, TSS HT sc, TSS TITANIUM2 sc, TSS TITANIUM2 sc

<16 bar: TSS VARI sc, TSS XL sc

<=10 bar: TSS EX1 sc

Flow rate
3 m/s maximum

Ambient Temperature
0 to 50°C: TSS W sc

0 to 60°C: TSS sc, TSS TITANIUM2 sc, TSS TITANIUM7 sc

0 to 80°C: TSS VARI sc, TSS XL sc

0 to 90°C: TSS HT sc

0 to 50°C: TSS EX1 sc

Dimensions
Basin Sensor: D×L 40 × 330 mm

TSS EX1 sc: D×L 48.5 mm × 385 mm

Inline Sensor (TriClamp): D×L 40 × 332 mm

TSS VARI sc, TSS XL sc: D×L 40 × 232 mm

Weight
Tank Sensor, Inline Sensor (TriClamp): Approx. 1.6 kg

TSS EX1 sc: Approx. 2.7 kg

TSS VARI sc, TSS XL sc: Approx. 1.5 kg

**Specifications subject to change without notice.*

Engineering Specifications

1. The suspended solids and/or turbidity sensor shall consist of a digital sensor designed to connect to a universal controller.
2. The suspended solids and/or turbidity sensor shall use a double optical system with two pulsating infrared LEDs and four receivers effectively doubling the accuracy of the instrument.
3. As the transmitted light is scattered, the receivers pick up the incident light at 90° and 120° angles for suspended solids and at 90° for turbidity in accordance with DIN/EN 27027/ISO 7027. The wavelength for both parameters is 860nm.
4. The eight channel measurement system, with a integrated bubble and temperature compensating software enables the instrument to have a wide measuring range that effectively cover most applications, from the darkest pre-treated water to the freshest of spring waters, with one instrument.
5. All versions have a high polished head to use the self cleaning effect and scratch-resistant sapphire window to withstand harsh environments
6. All sensors shall be capable of immersion in a tank or insertion into a pipe depending on the sensor selection.
7. The materials of construction shall be stainless steel or titanium, depending on the sensor selection.
8. The sensor shall have an operating range of 0.001 to 400 g/L for suspended solids and 0.001 to 4000 NTU for turbidity depending.
9. The sensor shall have an operating temperature from >0–50°C–90°C depending on the model.
10. The initial response time shall be 1 second and user-adjustable up to 300 seconds.
11. Up to 1000 FNU/NTU the accuracy shall be less than 5% of measurement value reading or ±0.01 FNU/NTU, whichever is greater for turbidity.

Ordering Information

TSSsc Turbidity and Suspended Solids Sensors

Immersion in Open Tanks Applications

LXV323.99.10002	TSS sc	Turbidity and Suspended Solids (0.001-4,000 FNU & 0.001-500 g/L) without wiper
LXV324.99.10002	TSS W sc	Turbidity and Suspended Solids (0.001-4,000 FNU & 0.001-500 g/L) with wiper
LXV325.99.10002	TSS HT sc	Turbidity and Suspended Solids (0.001-4,000 FNU & 0.001-500 g/L) without wiper
LXV329.99.10002	TSS TITANIUM2 sc	Turbidity and Suspended Solids (0.001-4,000 FNU & 0.001-500 g/L) without wiper
LXV330.99.10002	TSS TITANIUM7 sc	Turbidity and Suspended Solids (0.001-4,000 FNU & 0.001-500 g/L) without wiper
LXV328.99.10002	TSS EX1 sc	Turbidity and Suspended Solids for hazardous locations (Class I Div 2)

TriClamp Applications

LXV323.99.20002	TSS sc TriClamp	Turbidity and Suspended Solids (0.001-4,000 FNU & 0.001-500 g/L) without wiper
LXV324.99.20002	TSS W sc TriClamp	Turbidity and Suspended Solids (0.001-4,000 FNU & 0.001-500 g/L) with wiper
LXV325.99.20002	TSS HT sc TriClamp	Turbidity and Suspended Solids (0.001-4,000 FNU & 0.001-500 g/L) without wiper
LXV329.99.20002	TSS TITANIUM2 sc TriClamp	Turbidity and Suspended Solids (0.001-4,000 FNU & 0.001-500 g/L) without wiper
LXV330.99.20002	TSS TITANIUM7 sc TriClamp	Turbidity and Suspended Solids (0.001-4,000 FNU & 0.001-500 g/L) without wiper
LXV328.99.20002	TSS EX1 sc TriClamp	Turbidity and Suspended Solids for hazardous locations (Class I Div 2)
LXV326.99.10002	TSS VARI sc	Turbidity and Suspended Solids (0.001-4,000 FNU & 0.001-500 g/L) without wiper
LXV327.99.10002	TSS XL sc TriClamp	Turbidity and Suspended Solids (0.001-4,000 FNU & 0.001-500 g/L) without wiper

Inline Applications

LXV323.99.30002	TSS sc Inline	Turbidity and Suspended Solids (0.001-4,000 FNU & 0.001-500 g/L) without wiper
LXV324.99.30002	TSS W sc Inline	Turbidity and Suspended Solids (0.001-4,000 FNU & 0.001-500 g/L) with wiper
LXV325.99.30002	TSS HT sc Inline	Turbidity and Suspended Solids (0.001-4,000 FNU & 0.001-500 g/L) without wiper
LXV328.99.30002	TSS EX1 sc Inline	Turbidity and Suspended Solids for hazardous locations (Class I Div 2) without wiper

Continued on next page.

Ordering Information *continued*

Accessories

LZY634	Wiper set TSS sc (for 5 changes with screws and screwdriver)
LZY635	Maintenance set wiper (consisting of wiper, wiper axis 2-parts and gaskets)
LZY653	Gasket Silicon for TriClamp mounting
LZY654	Gasket PTFE for TriClamp mounting
LZY655	Gasket FPM for TriClamp mounting
LZY656	Clamp 2-parts, with screw type clamp for TriClamp mounting
LZY657	Clamp 3-parts, with screw type clamp for TriClamp mounting (to use with PTFE gasket)

Mounting Hardware for All TSS sc InSitu Probes

LZX414.00.10000	Standard mounting hardware for all TSS sc InSitu probes

Mounting Hardware for All TSS sc InLine Probes

*Ball Valves**

LZY630.00.10000	Ball valve armature for TSS sc, TSS W sc and TSS HT sc Inline probes including non-coped stainless steel welding flange LZX660
LZY630.00.11000	Ball valve armature for TSS sc, TSS W sc and TSS HT sc Inline probes including non-coped carbon steel welding flange LZX661
LZY630.00.12000	Ball valve armature for TSS sc, TSS W sc and TSS HT sc Inline probes without welding flange
LZY630.00.20000	Ball valve armature for TSS EX1 sc Inline probe including non-coped stainless steel welding flange LZX660
LZY630.00.21000	Ball valve armature for TSS EX1 sc Inline probe including non-coped carbon steel welding flange LZX661
LZY630.00.22000	Ball valve armature for TSS EX1 sc Inline probe without welding flange
LZX660	Non-coped stainless steel welding flange for ball valve in-line armature
LZX661	Non-coped carbon steel welding flange for ball valve in-line armature
LZY441	Hand wheel for ball valve in-line armature
LZY462	Gasket for mounting flange of ball valve in-line armature

Measuring Tubes

LZU304.99.00010	Measuring tube DN65 for TSS VARI sc
LZU304.99.00020	Measuring tube DN80 for TSS VARI sc
LZU304.99.00030	Measuring tube DN100 for TSS VARI sc
LZU304.99.00040	Measuring tube DN125 for TSS VARI sc
LZU304.99.10010	Measuring tube DN65 for TSS XL sc
LZU304.99.10020	Measuring tube DN80 for TSS XL sc
LZU304.99.10030	Measuring tube DN100 for TSS XL sc
LZU304.99.10040	Measuring tube DN125 for TSS XL sc
LZU304.99.10050	Measuring tube DN150 for TSS XL sc
LZU304.99.10060	Measuring tube DN200 for TSS XL sc
LZU304.99.10070	Measuring tube DN250 for TSS XL sc

Welded Branch Pieces

LZU302.99.00000	Welded branch piece raw for all TSS sc TriClamp probes**
LZU302.99.00010	Welded branch piece DN65 for all TSS sc TriClamp probes**
LZU302.99.00020	Welded branch piece DN80 for all TSS sc TriClamp probes**
LZU302.99.00030	Welded branch piece DN100 for all TSS sc TriClamp probes**
LZU302.99.00040	Welded branch piece DN125 for all TSS sc TriClamp probes**
LZU302.99.00050	Welded branch piece DN150 for all TSS sc TriClamp probes**
LZU302.99.00060	Welded branch piece DN200 for all TSS sc TriClamp probes**
LZU302.99.00070	Welded branch piece DN250 for all TSS sc TriClamp probes**
LZU302.99.10000	Welded branch piece raw for TSS XL sc
LZU302.99.10010	Welded branch piece DN65 for TSS XL sc
LZU302.99.10020	Welded branch piece DN80 for TSS XL sc
LZU302.99.10030	Welded branch piece DN100 for TSS XL sc
LZU302.99.10040	Welded branch piece DN125 for TSS XL sc
LZU302.99.10050	Welded branch piece DN150 for TSS XL sc
LZU302.99.10060	Welded branch piece DN200 for TSS XL sc
LZU302.99.10070	Welded branch piece DN250 for TSS XL sc
LZU303.99.00000	Screwed branch piece for all TSS sc TriClamp probes**

** Maximum operating pressure: 6 bar. ** Beside VARI & XL.*

Lit. No. 2657 Rev 3
L11 Printed in U.S.A.
©Hach Company, 2011. All rights reserved.
In the interest of improving and updating its equipment, Hach Company reserves the right to alter specifications to equipment at any time.

At Hach, it's about learning from our customers and providing the right answers. It's more than ensuring the quality of water—it's about ensuring the quality of life. When it comes to the things that touch our lives...

Keep it pure.

Make it simple.

Be right.

For current price information, technical support, and ordering assistance, contact the Hach office or distributor serving your area.

In the United States, contact:

HACH COMPANY World Headquarters
P.O. Box 389
Loveland, Colorado 80539-0389
U.S.A.
Telephone: 800-227-4224
Fax: 970-669-2932
E-mail: orders@hach.com
www.hach.com

U.S. exporters and customers in Canada, Latin America, sub-Saharan Africa, Asia, and Australia/New Zealand, contact:

HACH COMPANY World Headquarters
P.O. Box 389
Loveland, Colorado 80539-0389
U.S.A.
Telephone: 970-669-3050
Fax: 970-461-3939
E-mail: intl@hach.com
www.hach.com

In Europe, the Middle East, and Mediterranean Africa, contact:

HACH LANGE GmbH
Willstätterstraße 11
D-40549 Düsseldorf
GERMANY
Tel: +49 (0) 211 5288-0
Fax: +49 (0) 211 5288-143
E-mail: info@hach-lange.de
www.hach-lange.com

HACH®

Be Right™

8. Raw Water Pumps

Curve number	Pump performance curves
Reference curve XFP 155J-CB2 60Hz	**XFP 155J-CB2 60 HZ**

SULZER

			Discharge	Frequency
			DN150	60 Hz
Density	Viscosity	Testnorm	Rated speed	Date
62.3 lb/ft³	0.973 mm²/s	Hydraulic Institute- 1994 (level A)	1191 rpm	2016-04-18
Flow	Head	Rated power	Hydraulic efficiency	NPSH
1400 US g.p.m.	30 ft	28 hp	65.8 %	8.27 ft

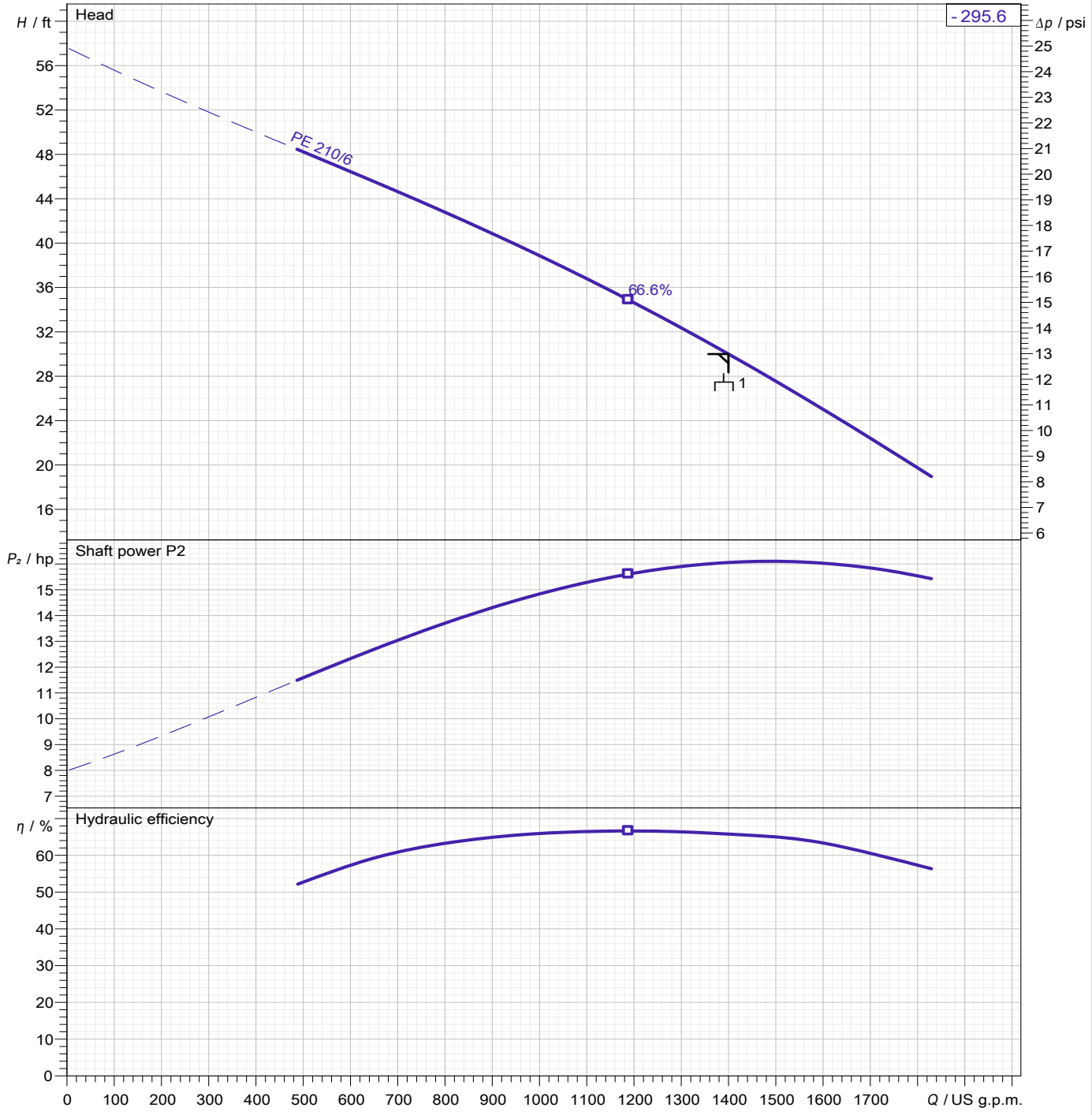

Impeller size	N° of vanes	Impeller	Solid size	Revision
296 mm	2	Contrablock Plus impeller	75 x 100 mm	

Sulzer reserves the right to change any data and dimensions without prior notice
and can not be held responsible for the use of information contained in this software.

Curve number	Pump performance curves	
Reference curve XFP 155J-CB2 60Hz	**XFP 155J-CB2 60 HZ**	

SULZER

			Discharge	Frequency
			DN150	60 Hz
Density	Viscosity	Testnorm	Rated speed	Date
62.3 lb/ft³	0.973 mm²/s	Hydraulic Institute- 1994 (level A)	1191 rpm	2016-04-18
Flow	Head	Rated power	Hydraulic efficiency	NPSH
2800 US g.p.m.	30 ft	28 hp	65.8 %	8.27 ft

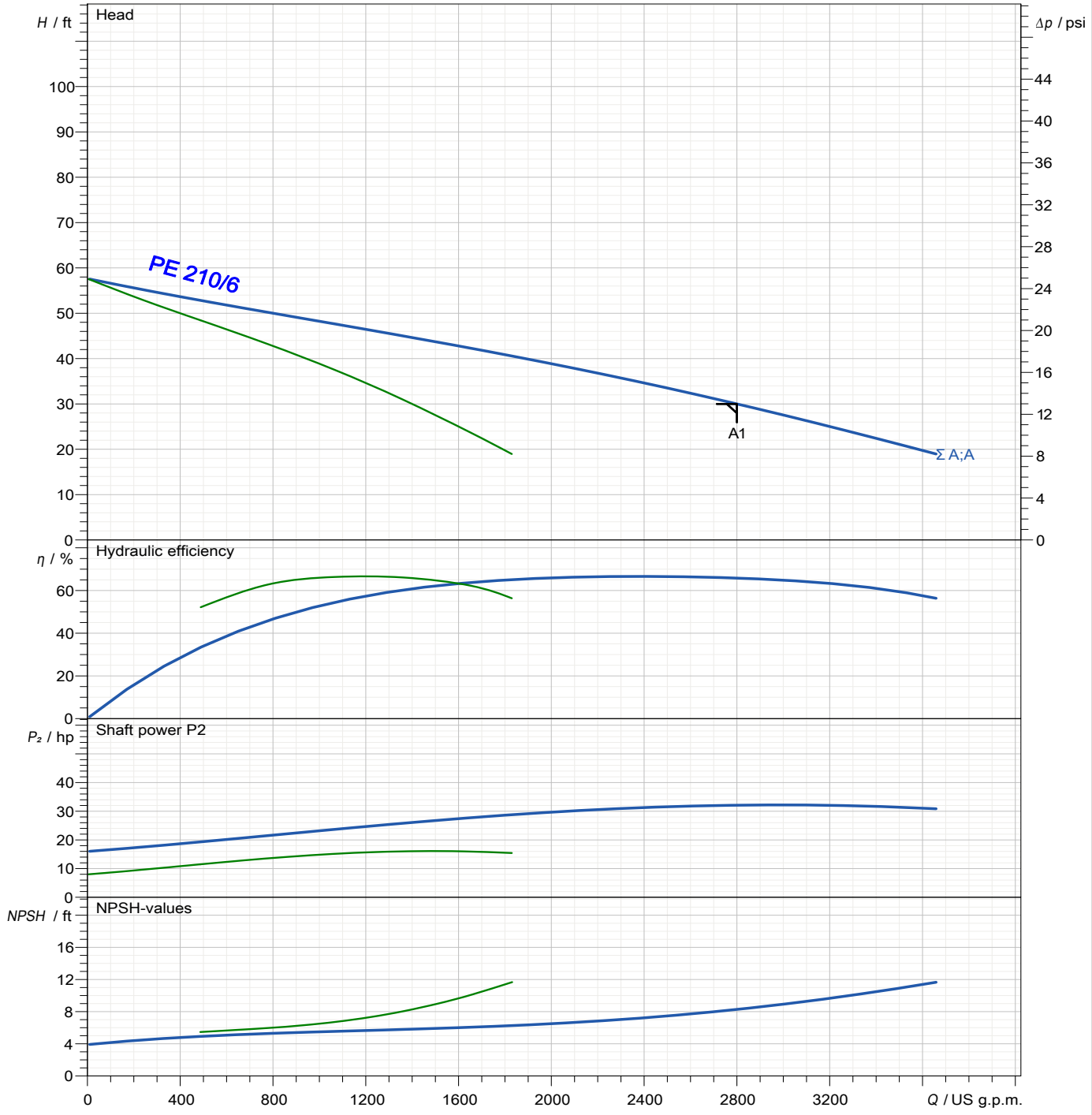

Impeller size	N° of vanes	Impeller	Solid size	Revision
296 mm	2	Contrablock Plus impeller	75 x 100 mm	

Sulzer reserves the right to change any data and dimensions without prior notice
and can not be held responsible for the use of information contained in this software.

Frequency	Motor performance curve	
60 Hz	PE 210/6	

SULZER

Rated power	Service factor	Nominal Speed	Number of poles	Rated voltage	Date
28.2 hp	1.3	1180 rpm	6	460 V	2016-04-18

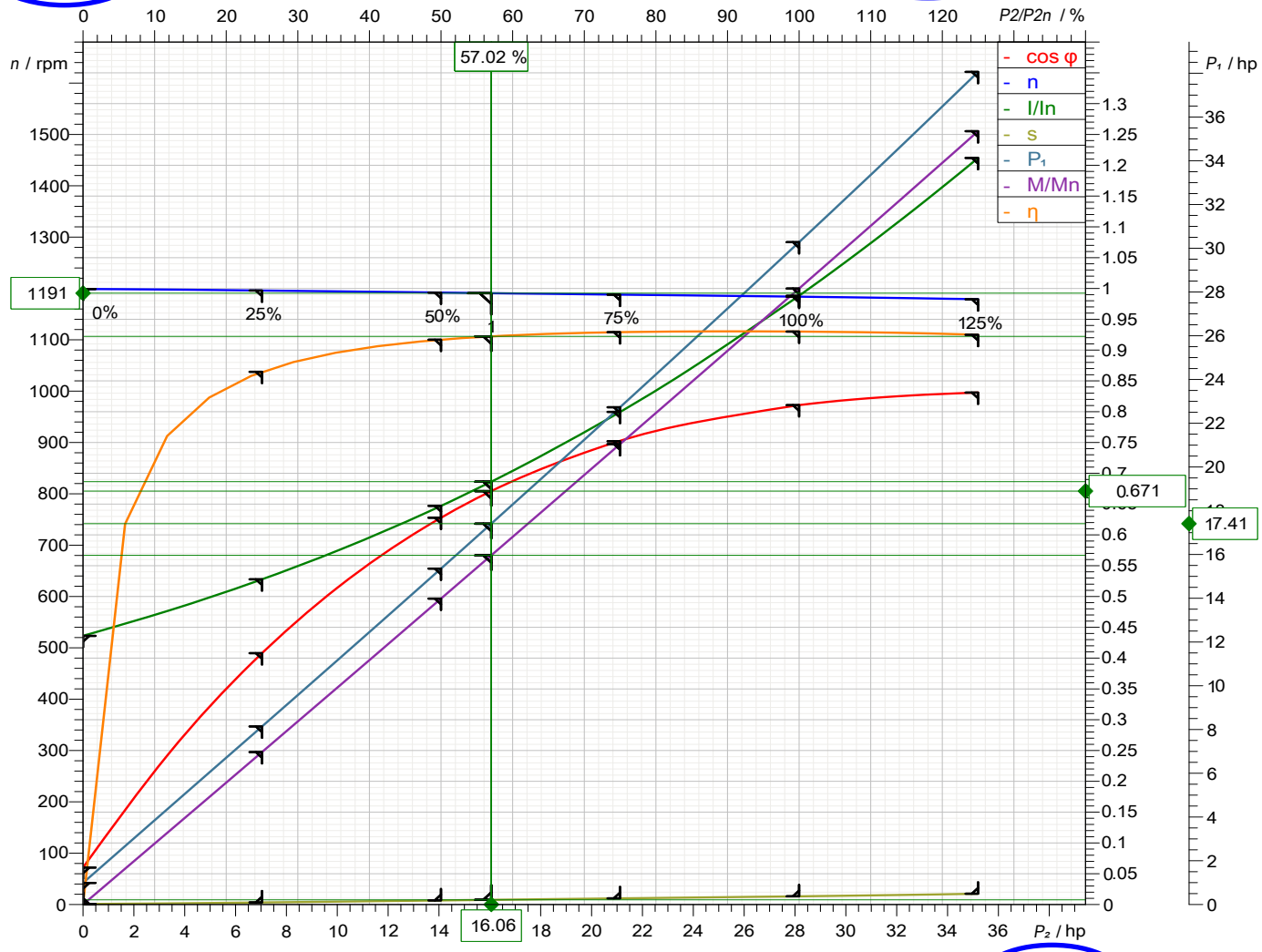

Symbol	No load	25 %	50 %	75 %	100 %	125 %
P_2 / hp	0	7.04	14.08	21.12	28.16	35.2
P_1 / hp	0.9888	8.141	15.36	22.73	30.28	38.06
η / %	0	86.48	91.69	92.91	93	92.48
n / rpm	1199	1196	1192	1188	1184	1179
cos φ	0.05999	0.4081	0.6279	0.7521	0.8107	0.831
I / A	15.43	18.67	22.89	28.29	34.96	42.87
s / %	0.08333	0.3333	0.6667	1	1.333	1.75
M / lbf ft	0	30.92	62.04	93.38	124.9	156.8

Tolerance according to VDE 0530 T1 12.84 for rated power

Starting current	Starting torque	Moment of inertia	No. starts per hour
233 A	300 lbf ft	8.94 lb ft²	10

Sulzer reserves the right to change any data and dimensions without prior notice
and can not be held responsible for the use of information contained in this software.

Curve number	Pump performance curves	
Reference curve XFP150E CB1 60HZ	**XFP150E CB1 60HZ**	

SULZER

			Discharge	Frequency
			DN150	60 Hz
Density	Viscosity	Testnorm	Rated speed	Date
62.3 lb/ft³	0.973 mm²/s	Hydraulic Institute- 1994 (level A)	1778 rpm	2016-04-18
Flow	Head	Rated power	Hydraulic efficiency	NPSH
700 g.p.m.	25 ft	10 hp	64.7 %	12 ft

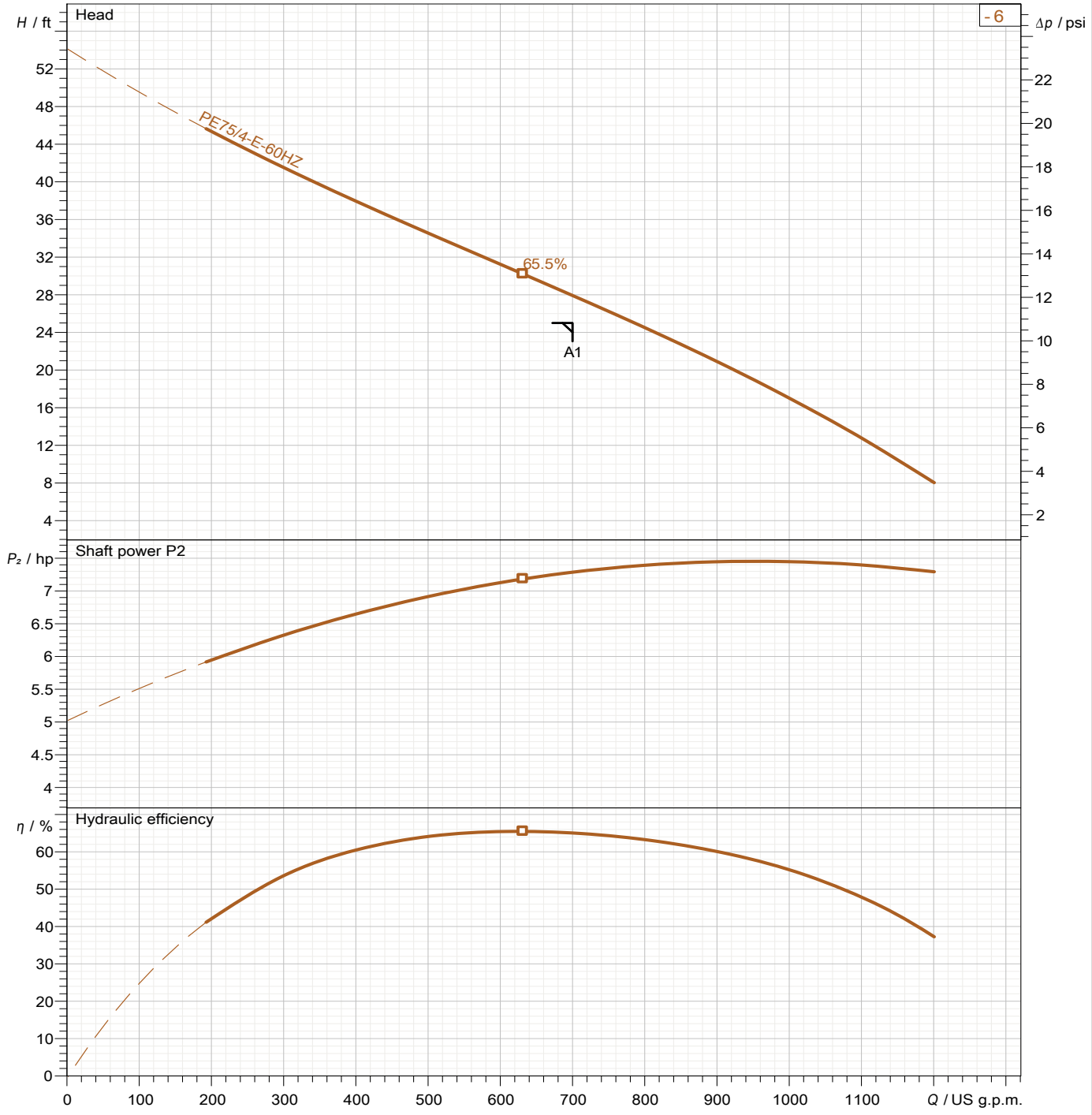

Impeller size	N° of vanes	Impeller	Solid size	Revision
190 mm	1	Contrablock Plus impeller, 1 vane	100 mm	

Sulzer reserves the right to change any data and dimensions without prior notice
and can not be held responsible for the use of information contained in this software.

Frequency	Motor performance curve	
60 Hz	PE75/4-E-60HZ	

SULZER

Rated power	Service factor	Nominal Speed	Number of poles	Rated voltage	Date
10.1 hp	1.3	1760 rpm	4	460 V	2016-04-18

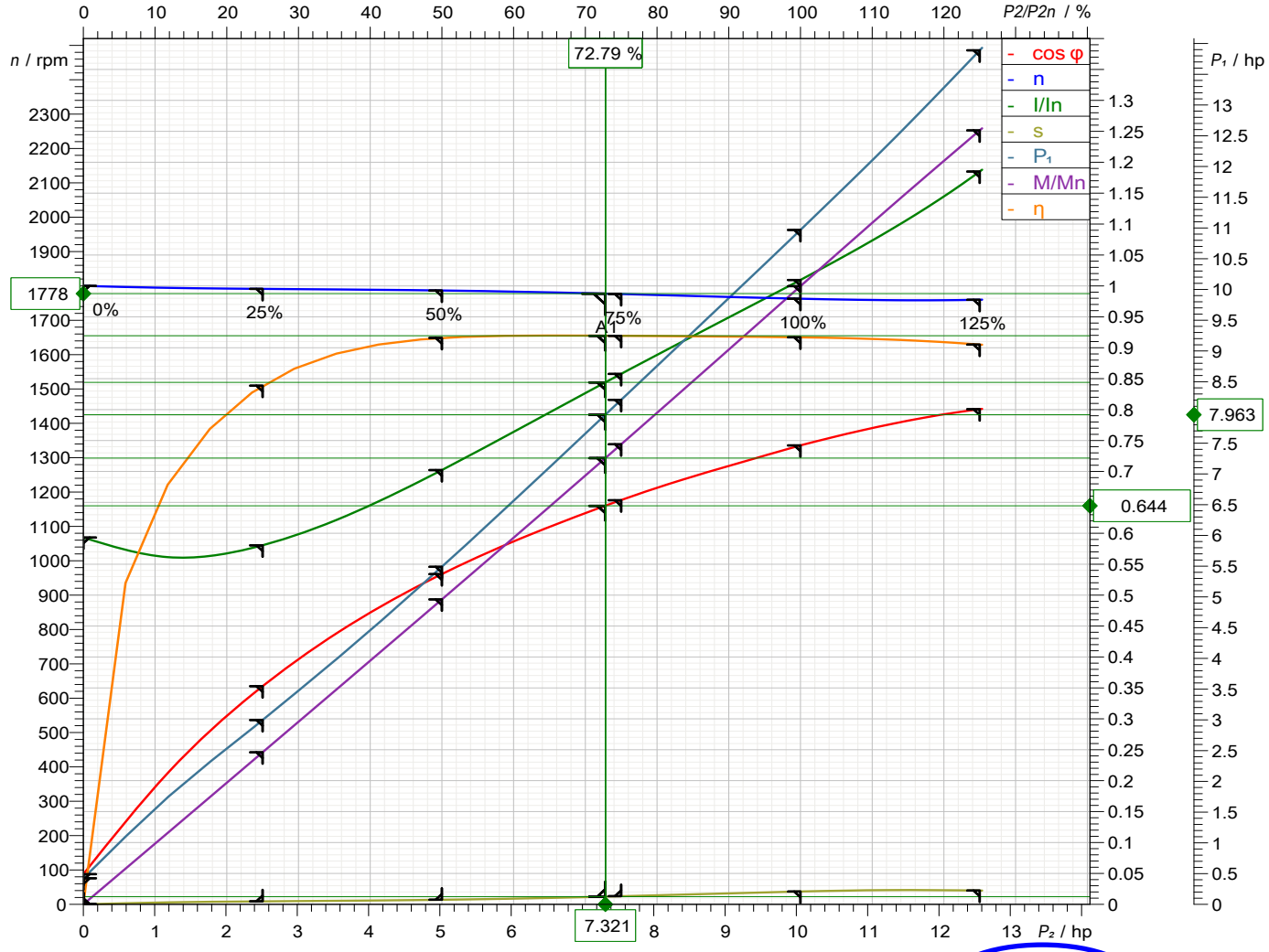

Symbol	No load	25 %	50 %	75 %	100 %	125 %
P_2 / hp	0	2.514	5.029	7.543	10.06	12.57
P_1 / hp	0.4241	2.998	5.49	8.206	10.97	13.89
η / %	0	83.88	91.6	91.93	91.69	90.52
n / rpm	1800	1791	1787	1776	1763	1760
cos φ	0.04885	0.3528	0.534	0.6535	0.7422	0.8007
I / A	8.126	7.953	9.622	11.75	13.83	16.23
s / %	0	0.48	0.7421	1.313	2.072	2.237
M / lbf ft	0	7.372	14.78	22.3	29.97	37.52

Tolerance according to VDE 0530 T1 12.84 for rated power

Starting current	Starting torque	Moment of inertia	No. starts per hour
79.6 A	58.5 lbf ft	0.752 lb ft²	15

Sulzer reserves the right to change any data and dimensions without prior notice
and can not be held responsible for the use of information contained in this software.

Hydra Service, Inc.

SPECIALIST IN FLUID MOVEMENT

250 Springivew Commerce Drive
Debary Florida 32713
Phone: 407 330 3456
Phone: 800 323 1731
Fax: 407 330 3404

Sales Representative
Contact Information
Cell Phone: 407-416-4973
Fax: 407-977- 6419

TO:	**Tetra Tech**	FROM:	**Bill Heller S1**
		EMAIL:	bheller@hydraservice.net
ATTN:	**Tiffany Miller**	DATE:	**April 20, 2016**
PHONE	**407-480-3901**	QUOTE:	
FAX:		REF:	**City of Deltona Raw Water Transfer Pumps**
EMAIL:	tiffany.miller@tetratech.com	ENG FIRM	

1	ABS Model **XFP150E CB1 PE75/4** pump, **6"** discharge, **10** horse power, **190mm** impeller, **480** volt, **3** phase, with **49'** of power cable.
1	Vertical dry pit stand, part **# 41826091**
1	Hardware Kit, pump to stand, part
1	Suction elbow **6" X 10" with cleanout**,
1	Hardware Kit elbow to pump
2	ABS Model **XFP155J CB2 PE210/6** pump, **6"** discharge, **10** horse power, **295mm** impeller, **480** volt, **3** phase, with **49'** of power cable.
2	Vertical dry pit stand, part **# 41826175**
2	Hardware Kit, pump to stand, part
2	Suction elbow **6" X 8" with cleanout**,
2	Hardware Kit elbow to pump
1	Control panel **triplex**, **VFD** rated, **NEMA 3R**, **316 SS** enclosure

TOTAL PRICE, F.O.B. JOB, FREIGHT ALLOWED **$121,447.00** PLUS ANY FEDERAL, STATE OR LOCAL TAXES WHICH MAY APPLY. TERMS ARE NET **30** DAYS. PRICES ARE FIRM 30 DAYS
"HYDRA SERVICE INC TERMS & CONDITIONS APPLY" PAYMENT TERMS NET 30 DAYS.
ESTMTD DELIVERY **8-10** WEEKS AFTER RECEIPT IN OUR OFFICE OF COMPLETE APPROVED SUBMITTAL DATA AND SIGNED PROPOSAL.
THESE TERMS ARE INDEPENDENT OF, AND ARE NOT CONTINGENT UPON THE TIME OR MANNER IN WHICH PURCHASER MAY RECEIVE PAYMENT FROM OTHERS.
ONE DAY OF FACTORY START-UP IS INCLUDED AND REQUIRED FOR WARRANTY. PAYMENT FOR MATERIALS WILL BE REQUIRED BEFORE THE AUTHORIZED START-UP IS CONDUCTED.

ACCEPTED DATE _____ Review Date: _____

_____ NAME OF PURCHASER

_____ REVIEWED BY HYDRA SERVICE PUMP REP.

Hydra Service, Inc.
SPECIALIST IN FLUID MOVEMENT

abs
We know how water works

WORKSHEET

QUOTE: 0

TO:	**Tetra Tech**	FROM:	**Bill Heller S1**
ATTN:	**Tiffany Miller**	DATE:	**April 20, 2016**
PHONE	**407-480-3901**	QUOTE:	**0**
FAX:	**0**	REF:	**City of Deltona Raw Water Transfer Pumps**
EMAIL:		ENG FIRM:	**0**

1	ABS Model XFP150E CB1 PE75/4 pump, 6" discharge, 10 horse power, 190mm impeller, 480 volt, 3 phase, with 49' of power cable.	$8,088.00	$8,088.00
1	Vertical dry pit stand, part # 41826091	$1,200.00	$1,200.00
1	Hardware Kit, pump to stand, part	$50.00	$50.00
1	Suction elbow 6" X 10" with cleanout,	$1,700.00	$1,700.00
1	Hardware Kit elbow to pump	$125.00	$125.00
2	ABS Model XFP155J CB2 PE210/6 pump, 6" discharge, 10 horse power, 295mm impeller, 480 volt, 3 phase, with 49' of power cable.	$30,602.00	$61,204.00
2	Vertical dry pit stand, part # 41826175	$2,600.00	$5,200.00
2	Hardware Kit, pump to stand, part	$50.00	$100.00
2	Suction elbow 6" X 8" with cleanout,	$2,400.00	$4,800.00
2	Hardware Kit elbow to pump	$115.00	$230.00
1	Control panel triplex, VFD rated, NEMA 3R, 316 SS enclosure		

SUBTOTAL	**$82,697.00**
DISCOUNT	**1**
TOTAL	**$82,697.00**
LOCAL WARRANTY	
BUY OUTS	$34,000.00
FREIGHT	$4,000.00
START-UP	$750.00
GRAND TOTAL	**$121,447.00**

WET WELL HATCH	
PANEL COST	$25,500.00
TOTAL BUYOUTS	**$25,500.00**
MARGIN	**0.25**
BUYOUTS NET	**$34,000.00**

Appendix B

Subsurface Soil Exploration and Geotechnical Engineering Evaluation Proposed Treatment Plant Improvements Alexander Avenue Site, May 2015, Ardaman & Associates, Inc.

Subsurface Soil Exploration and
Geotechnical Engineering Evaluation
Proposed Treatment Plant Improvements
Alexander Avenue Site
City of Deltona, Volusia County, Florida

Ardaman & Associates, Inc.

OFFICES

Orlando – 8008 S. Orange Avenue, Orlando Florida 32809 – Phone (407) 855-3860
Alexandria – 3609 Mac Lee Drive, Alexandria, Louisiana 71302 – Phone (318) 443-2888
Bartow – 1525 Centennial Drive, Bartow, Florida 33830 – Phone (863) 533-0858
Baton Rouge – 316 Highlandia Drive, Baton Rouge, Louisiana 70884 – Phone (225) 752-4790
Cocoa – 1300 N. Cocoa Blvd., Cocoa, Florida 32922 – Phone (321) 632-2503
Fort Myers – 9970 Bavaria Road, Fort Myers, Florida 33913 – Phone (239) 768-6600
Miami – 2608 W. 84th Street, Hialeah, Florida 33016 – Phone (305) 825-2683
Monroe – 1122 Hayes Street, West Monroe, Louisiana 71292 – Phone (318) 387-4103
New Orleans – 1305 Distributors Row, Suite I, Jefferson, Louisiana 70123 – Phone (504) 835-2593
Port St. Lucie – 460 Concourse Place NW, Unit 1, Port St. Lucie, Florida 34986 – Phone (772) 878-0072
Sarasota – 78 Sarasota Center Blvd., Sarasota, Florida 34240 – Phone (941) 922-3526
Shreveport – 7222 Greenwood Road, Shreveport, Louisiana 71119 – Phone (318) 636-3673
Tallahassee – 3175 West Tharpe Street, Tallahassee, Florida 32303 – Phone (850) 576-6131
Tampa – 3925 Coconut Palm Drive, Suite 115, Tampa, Florida 33619 – Phone (813) 620-3389
West Palm Beach – 2200 North Florida Mango Road, Suite 101, West Palm Beach, Florida 33409 – Phone (561) 687-8200

MEMBERS:
A.S.F.E.
American Concrete Institute
ASTM International
Florida Institute of Consulting Engineers

Ardaman & Associates, Inc.

Geotechnical, Environmental and
Materials Consultants

May 26, 2015
File No. 15-6344

Tetra Tech
201 East Pine Street, Suite 1000
Orlando, Florida 32801

Attention: Mr. Rashesh Shah, P.E.

Subject: Subsurface Soil Exploration and
Geotechnical Engineering Evaluation
Proposed Treatment Plant Improvements
Alexander Avenue Site
City of Deltona, Volusia County, Florida

Dear Mr. Shah:

As requested and authorized, we have completed a shallow subsurface soil exploration for the subject project. The purposes of performing this exploration were to evaluate the general subsurface conditions within the building/structure and reservoir areas and to provide recommendations for site preparation and foundation support. In addition, we have estimated the normal seasonal high groundwater level at the boring locations. This report documents our findings and presents our engineering recommendations.

SITE LOCATION AND SITE DESCRIPTION

The site for the proposed improvements is located north of the intersection of Mobley Drive and Windbrook Drive in Deltona, Volusia County, Florida (Section 31, Township 18 South, Range 30 East). The general site location is shown superimposed on the Orange City and Lake Helen, Florida U.S.G.S. quadrangle maps presented on Figure 1.

The site is currently under construction for the subject treatment plant and developed with an existing 1MG Ground Storage Tank, pump station, generator pad and central bermed impoundment area.

PROPOSED CONSTRUCTION AND GRADING

It is our understanding that the proposed development includes the following:

- A One Million Gallon (1MG) Ground Storage Tank (GST)
- Chlorine Contact Tank
- Filters
- Transfer Pump Station
- Lined Reservoir
- One story Electrical Building

For the purposes of our analysis, we have assumed the approximate dimensions and maximum loading conditions for the various structures to be as shown below.

Structure	Approx. Dimensions (feet)	Load	
		Walls (klf)	Floor (psf)
1MG GST	85 Diameter (ID) 23' 7" Sidewater	3 - 4	1,500
Chlorine Contact Tank	68 x 70	3 - 4	750
Filters	68 x 70	N/A	250
Transfer Pump Station	20 x 26 25-foot deep well	3 - 4	250 1,500 (well)
Lined Reservoir	500 x 600	N/A	N/A
Electrical Building	15 x 40	3 - 4	100

Grading plans are not complete at this time, therefore we have assumed that 1 to 4 feet of fill is required to raise the building/structure areas to final elevations. If actual building loads or fill height exceed our assumptions, then the recommendations in this report may not be valid.

REVIEW OF SOIL SURVEY MAPS

Based on the 1980 Soil Survey for Volusia County, Florida, as prepared by the U.S. Department of Agriculture Soil Conservation Service, the site is located in an area mapped as the "Paola fine sands, 0 to 8 percent slopes" soil series. The "Paola fine sands, 0 to 8 percent slopes" soil series consists of nearly level to sloping sandy soil occurring on high, broad sandhills. The internal drainage of the "Paola fine sands, 0 to 8 percent slopes" is excessively drained and the soil permeability is rapid. According to the Soil Survey, the seasonal high water table for the "Paola fine sands, 0 to 8 percent slopes" soil series is typically below 72 inches of the natural ground surface.

FIELD EXPLORATION PROGRAM

SPT Borings

The field exploration program included performing 13 Standard Penetration Test (SPT) borings. The SPT borings were advanced to depths ranging from 20 to 100 feet below the ground surface using the methodology outlined in ASTM D-1586. A summary of this field procedure is included in Appendix I. Split-spoon soil samples recovered during performance of the borings were visually classified in the field and representative portions of the samples were transported to our laboratory in sealed sample jars.

An attempt was made to measure the groundwater level at each of the boring locations during drilling. Borings SB-1 through SB-4 and SB-9 were grouted with cement-bentonite slurry upon

completion of drilling. Borings SB-5 and SB-10 through SB-13 were backfilled with soil cuttings upon completion of drilling.

Field Permeability Tests

Five field permeability tests were performed at the location of the proposed lined reservoir and surrounding berms. The field permeability tests were performed by installing a solid-walled PVC casing snugly fit into a 4-inch diameter auger borehole. The bottom of the pipe was open and raised 1 foot above the bottom of the borehole. The bottom 1 foot of the borehole was gravel-packed. The pipe was then filled to the top with water. The tests were performed as "falling head" tests in which the rate of water drop within the pipe was measured.

Test Locations

The approximate locations of the borings are schematically illustrated on a site plan shown on Figure 3. The permeability tests were conducted adjacent to Borings SB-9 through SB-13. These locations were determined in the field by Global Positioning System (GPS) utilizing hand-held GPS equipment and coordinates obtained from Tetra Tech. Boring locations should be considered accurate only to the degree implied by the method of locating used.

LABORATORY PROGRAM

Representative soil samples obtained during our field sampling operation were packaged and transferred to our laboratory for further visual examination and classification. The soil samples were visually classified in general accordance with the Unified Soil Classification System (ASTM D-2488). The resulting soil descriptions are shown on the soil boring profiles presented on Figures 4 through 6.

In addition, we conducted one natural moisture content test (ASTM D2216), four percent fines analyses (ASTM D1140), and one Atterberg limits test (ASTM D4318) on selected soil samples obtained from the borings. The results of these tests are presented adjacent to the sample depth on the boring profiles on Figures 4 through 6.

GENERAL SUBSURFACE CONDITIONS

General Soil Profile

The results of the field exploration and laboratory programs are graphically summarized on the soil boring profiles presented on Figures 4 through 6. The stratification of the boring profiles represents our interpretation of the field boring logs and the results of laboratory examinations of the recovered samples. The stratification lines represent the approximate boundary between soil types. The actual transitions may be more gradual than implied.

The results of the borings indicate the following general soil profile:

Depth Below Ground Surface (feet)	Description
0 - 13½	Very loose to medium dense fine sand (SP) and fine sand with silt (SP-SM)
13½ - 38	Medium dense to dense fine sand with varying amounts of silt/clay (SP, SP-SM, SM, SP-SC, SC)
38 - 72½	Soft to stiff clay (CL/CH) or medium dense to dense clayey fine sand (SC)
72½ - 100	Medium dense to dense fine sand (SP) and fine sand with clay (SP-SC) or clayey fine sand (SC)

The above soil profile is outlined in general terms only. Please refer to Figures 4 through 6 for soil profile details.

Groundwater Level

An attempt was made to measure the groundwater level in the boreholes during drilling. As shown on Figures 4 through 6, groundwater was encountered at depths that ranged from 6.7 to 10 feet below the existing ground surface on the dates indicated. Fluctuation in groundwater levels should be anticipated throughout the year primarily due to seasonal variations in rainfall and other factors that may vary from the time the borings were conducted.

For borings referenced “GNM” at the bottom of the boring profiles on Figures 4 through 6, groundwater was not encountered within the top 10 feet and could not be measured below a depth of 10 feet due to the mudded condition of the borehole. However, this does not necessarily mean that groundwater would not be encountered within the top 10 feet of the borings referenced “GNM” at some other time.

NORMAL SEASONAL HIGH GROUNDWATER LEVEL

The normal seasonal high groundwater level each year is the level in the August-September period at the end of the rainy season during a year of normal (average) rainfall. The water table elevations associated with a higher than normal rainfall and in the extreme case, flood, would be higher to much higher than the normal seasonal high groundwater level. The normal high water levels would more approximate the normal seasonal high groundwater levels.

The seasonal high groundwater level is affected by a number of factors. The drainage characteristics of the soils, the land surface elevation, relief points such as drainage ditches, lakes, rivers, swamp areas, etc., and distance to relief points are some of the more important factors influencing the seasonal high groundwater level.

Based on our interpretation of the site conditions using our boring logs, we estimate the normal seasonal high groundwater level at the boring locations to be approximately at the levels indicated on the boring profiles shown on Figures 4 through 6.

ENGINEERING EVALUATION AND RECOMMENDATIONS

General

The results of our exploration indicate that, with proper site preparation as recommended in this report, the existing soils are suitable for supporting the structures on conventional shallow foundation systems. Spread footings should provide an adequate support system for the electrical building. Mat and/or mat and ringwall foundations should provide an adequate support system for the other structures.

Ardaman and Associates used the results of the Standard Penetration Test (SPT) borings to undertake a settlement analysis for the proposed ground storage tank and chlorine contact tank. The results of the settlement analysis are presented in the “Foundation Support by Mat and/or Mat and Ringwall Foundations and Foundation Compaction Criteria for Other Structures” section of this report. Assuming that the calculated settlements are deemed acceptable, then with proper site preparation as recommended in this report, the existing soils are suitable for supporting the proposed tanks on conventional shallow foundations (i.e., mat and/or mat and ringwall foundations).

The following are our recommendations for overall site preparation and foundation support which we feel best suited for the proposed facility and existing soil conditions. The recommendations are made as a guide for the design engineer and/or architect, parts of which should be incorporated into the project's specifications.

We note that if the calculated total and differential settlements for the proposed tanks, as detailed in the “Foundation Support by Mat and/or Mat and Ringwall Foundations and Foundation Compaction Criteria for Other Structures” section of this report are deemed unacceptable, then an alternative deep foundation system (i.e.; piles) may be required. Alternatively it may be possible to reduce settlement to within tolerable limits by reconfiguring the tank to be of a greater diameter but lower side water depth (i.e. for the same storage capacity), and/or by significantly lowering the tank foundation elevation.

Stripping and Grubbing

The "footprints" of the proposed structures, plus a minimum margin of five feet, should be stripped of all surface vegetation, stumps, debris, organic topsoil or other deleterious materials, as encountered. Buried utilities should be removed or plugged to eliminate conduits into which surrounding soils could erode.

After stripping, the site should be grubbed or root-raked such that roots with a diameter greater than ½ inch, stumps, or small roots in a dense state, are completely removed. The actual depth(s)

of stripping and grubbing must be determined by visual observation and judgment during the earthwork operation.

Excavation for Transfer Pump Station

It is our understanding that the proposed transfer pump station will be founded around 25 feet below grade. We anticipate that the soils encountered in Boring SB-8 can be excavated with standard earth moving equipment (e.g.; front-end loaders and backhoes). The soil below the bottom of the excavation should be disturbed as little as possible by the excavation process. The actual method(s) of excavation should be determined by the contractor, however, the excavation should be safely braced to prevent injury to personnel or damage to equipment. The foundation elements of any existing nearby structures must be adequately supported during excavation and placement of the proposed structure to prevent loss of foundation support for the existing structures.

Following excavation to the founding level of the proposed pump station structure, the bottom of the excavation should be compacted to achieve a firm and unyielding condition. The excavated ground surface should be inspected by a representative of Ardaman & Associates using visual observation and probing. Any areas of deleterious, very loose, or soft soils should be overexcavated and backfilled.

Excavation and backfilling (as necessary) should be performed “in the dry”. Therefore, dewatering will be necessary to lower the groundwater level 2 to 3 feet below the bottom of the excavation. Dewatering is further discussed in the “Dewatering” section of this report.

The excavation should be safely braced to prevent injury to personnel or damage to equipment. Temporary safe slopes should be cut at a minimum in accordance with OSHA, 29 CFR Part 1926 Final Rule, Excavation Requirements. Flatter slopes should be used if deemed necessary.

Surcharge loads should be kept a horizontal distance away from the excavation equivalent to the depth of the excavation.

Proof-rolling

We recommend proof-rolling the cleared surface to locate any unforeseen soft areas or unsuitable surface or near-surface soils, to increase the density of the upper soils, and to prepare the existing surface for the addition of the fill soils (as required). Proof-rolling of the building areas should consist of at least 10 passes of a compactor capable of achieving the density requirements described in the next paragraph. Each pass should overlap the preceding pass by 30 percent to achieve complete coverage. If deemed necessary, in areas that continue to "yield", remove all deleterious material and replace with clean, compacted sand backfill. The proof-rolling should occur after cutting and before filling.

A density equivalent to or greater than 95 percent of the modified Proctor (ASTM D-1557) maximum dry density value for a depth of 2 feet in the structure areas must be achieved beneath the stripped and grubbed ground surface. Additional passes and/or overexcavation and

recompaction may be required if these minimum density requirements are not achieved. The soil moisture should be adjusted as necessary during compaction.

Proof-rolling may cause upward movement or "pumping" of the groundwater. However, we recommend that the existing surface be level and firm prior to the addition of fill soils. Proof-rolling with a front-end loader may help achieve the desired surface and compaction condition before adding the fill soils. The site should be dewatered as necessary. Depending on the time of year, a 12- to 18-inch layer of clean fine sand (SP) fill may be required prior to proof-rolling.

Care should be exercised to avoid damaging any neighboring structures while the compaction operation is underway. Prior to commencing compaction, occupants of adjacent structures should be notified and the existing condition (i.e. cracks) of the structures documented with photographs and survey (if deemed necessary). Compaction should cease if deemed detrimental to adjacent structures, and Ardaman & Associates should be notified immediately. Heavy vibratory compaction should not be used due to the close proximity of existing structures.

Suitable Fill Material and Compaction of Fill Soils

All fill materials should be free of organic materials, such as roots and vegetation. We recommend using fill with less than 12 percent by dry weight of material passing the U.S. Standard No. 200 sieve size. The fine sand and fine sand with silt (Strata No. 1 and 2 without roots, as shown on Figures 4 through 6) are suitable for use as fill materials and, with proper moisture control, should densify using conventional compaction methods. Soils with more than 12 percent passing the No. 200 sieve can be used in some applications, but will be more difficult to compact due to their inherent nature to retain soil moisture.

All structural fill should be placed in level lifts not to exceed 12 inches in uncompacted thickness. Each lift should be compacted to at least 95 percent of the modified Proctor (ASTM D-1557) maximum dry density value. The filling and compaction operations should continue in lifts until the desired elevation(s) is achieved. If hand-held compaction equipment is used, the lift thickness should be reduced to no more than 6 inches.

We note that the partially cemented hardpan-type soils can be problematic for several reasons. Hardpan can be difficult to excavate, often requiring special equipment; especially in confined excavations such as utility trenches, footings, etc. Excavated hardpan-type soils are often boulder-size chunks of cemented soils which are not easily broken down for re-use as structural fill. In addition, when pulverized into fragments that can be compacted to an adequately dense matrix, the in-place soil often fails the relative compaction test because the laboratory test continues to pulverize the soil into smaller particles resulting in a denser laboratory matrix than that which occurs in the field. Alternative acceptance criteria may need to be used for hardpan-type soils used as fill. This criteria would need to be developed on a site specific basis after observing the contractor’s earthwork methodology and the nature and condition of the compacted hardpan-type soils.

Our fill soil recommendations do not apply to the lined reservoir vicinity as the pond designer should recommend types of fill, if any, in the lined reservoir vicinity to be compatible with the system design.

Foundation Support by Spread Footings and Foundation Compaction Criteria for the Electrical Building

Excavate the foundations to the proposed bottom of footing elevations and, thereafter, verify the in-place compaction for a depth of 2 feet below the footing bottoms. If necessary, compact the soils at the bottom of the excavations to at least 95 percent of the modified Proctor maximum dry density (ASTM D-1557) for a depth of 2 feet below the footing bottoms. Based on the existing soil conditions and, assuming the above outlined proof-rolling and compaction criteria are implemented, an allowable soil bearing pressure of 2,000 pounds per square foot (psf) may be used in the foundation design. This bearing pressure should result in foundation settlement within tolerable limits (i.e., around 1 inch or less).

All bearing wall foundations should be a minimum of 18 inches wide and column foundations 24 inches wide. A minimum soil cover of 18 inches should be maintained from the bottom of the foundations to the adjacent finished grades.

Foundation Support by Mat Foundations and Foundation Compaction Criteria for the Transfer Pump Station

Excavate to the proposed bottom foundation elevation and, thereafter, verify the in-place compaction for a depth of 2 feet below the foundation bottom. If necessary, compact the soils at the bottom of the excavation to at least 95 percent of the modified Proctor maximum dry density (ASTM D-1557) for a depth of 2 feet below the foundation bottom. Based on the existing soil conditions and, assuming the above outlined excavation and compaction criteria are implemented, a net increase in allowable soil bearing pressure of 500 pounds per square foot (psf) may be used in the foundation design. This bearing pressure should result in foundation settlement within tolerable limits (i.e., 1 inch or less).

There are alternative installation techniques for wet wells (e.g.; caisson method) other than installing the structure in a dewatered excavation. If an installation technique other than installation in a dewatered excavation is planned, we should be retained to review the proposed methods. We can then modify our recommendations as appropriate.

Uplift Resistance

Permanent structures submerged below the groundwater table will be subjected to uplift forces caused by buoyancy. The components resisting this buoyancy include: 1) the total weight of the pipe or structure divided by an appropriate factor of safety; 2) the buoyant weight of soil overlying the pipe or structure; and 3) the shearing forces that act on shear planes that radiate vertically

upward from the perimeter of the pipe or the edges of the structure to the ground surface. The allowable unit shearing resistance may be determined by the following formula:

Allowable Unit Shearing Resistance, $F=K_o\gamma_m h(2/3\ \tan\varphi)/S.F.$ (above groundwater table)

Allowable Unit Shearing Resistance, $F=K_o[\gamma_m h_w+\gamma_b(h-h_w)](2/3\ \tan\varphi)/S.F.$ (below groundwater table)

Where:

F = unit shearing resistance (psf)
K_o = coefficient of earth pressure at rest = 0.5
γ_m = unit weight of moist soil = 110 pcf
γ_b = buoyant unit weight of soil = 60 pcf
h = vertical depth (feet) below grade at which shearing resistance is determined
h_w = vertical depth (feet) below grade to groundwater table
φ = angle of internal friction of the soil = 30 degrees
S.F. = safety factor = 2

The values given for the above parameters assume that the permanent structures are covered by clean, well compacted granular backfill that extends horizontally at least 2 feet beyond the structures.

Earth Pressure on Shoring and Bracing

If temporary shoring and bracing is required for any excavations, the system should be designed to resist lateral earth pressure. The design earth pressure will be a function of the flexibility of the shoring and bracing system. For a flexible system restrained laterally by braces placed as the excavation proceeds, the design earth pressure for shoring and bracing can be computed using a uniform earth pressure distribution with depth. It is recommended that soils be de-watered around the excavations. For such de-watered excavations, we recommended using the following uniform pressure distribution over the full braced height as follows:

Uniform Soil Pressure Distribution, $p = 0.65\ K_a\gamma_s H$

where:

p = uniform pressure distribution for design of braced excavation
K_a = coefficient of active earth pressure = 0.33
γ_s = unit weight of saturated soils = 120 pcf
H = depth of excavation

An appropriate factor of safety should be applied for the design of the braced excavations.

Lateral pressure distributions determined in accordance with the above do not take hydrostatic pressures or surcharge loads into account. To the extent that such pressures and forces may act on the walls, they should be included in the design.

Construction equipment and excavated fill should be kept a minimum distance of 5 feet from the edge of the braced or shored excavation. Backfill material placed adjacent to (maintaining a minimum 5-foot horizontal clearance) the braced or shored excavation should have a minimum slope of 2.0H:1.0V, or flatter if required by site specific conditions and/or to meet OSHA requirements.

Means and methods of excavation and bracing should be the responsibility of the Contractor; however, excavation and/or bracing should at a minimum adhere to the requirements of the Occupational Safety Health Administration (OSHA).

Lateral Earth Pressures

Lateral loads acting on the embedded structure will include at-rest earth pressures as well as hydrostatic pressures and surcharge loads. The lateral earth pressure will be a function of both the depth below ground surface and the soil unit weight (submerged or moist) plus hydrostatic pressure (if applicable). The following equations can be used to determine the lateral at-rest earth pressure:

$\sigma_h = K_o \gamma_m h$ (above groundwater table)
$\sigma_h = K_o [\gamma_m h_w + \gamma_b (h - h_w)]$ (below groundwater table)

Where:

- σ_h = lateral earth pressure (psf)
- K_o = coefficient of at rest earth pressure (0.5) (this value assumes that the backfill is lightly compacted yet not overcompacted)
- γ_m = effective moist unit weight of soil = 110 pcf for compacted moist soil above the water table.
- γ_b = buoyant unit weight of soil = 58 pcf for compacted saturated soil below the water table.
- h = vertical depth (feet) below grade at which lateral earth pressure is determined
- h_w = vertical depth (feet) below grade to groundwater table

For design, an appropriate factor of safety should be applied to the lateral earth pressure calculated using the above equation. Lateral pressure distributions determined in accordance with the above do not include hydrostatic pressures or surcharge loads. Where applicable, they should be incorporated in the design.

Foundation Support by Mat and/or Mat and Ringwall Foundations and Foundation Compaction Criteria for Other Structures (Ground Storage Tank, Chlorine Contact Tank and Filters).

Excavate the foundations to the proposed bottom of footing elevations and, thereafter, verify the in-place compaction for a depth of 2 feet below the foundation bottoms. If necessary, compact the soils at the bottom of the excavations to at least 95 percent of the modified Proctor maximum dry density (ASTM D-1557) for a depth of 2 feet below the footing bottoms. Based on the existing soil conditions and, assuming the above outlined proof-rolling and compaction criteria are implemented, an allowable soil bearing pressure of 1,500 pounds per square foot (psf) may be used in the foundation design.

In the case of the ringwall for the proposed ground storage tank, all bearing wall foundations should be a minimum of 36 inches wide. A minimum soil cover of 30 inches should be maintained from the bottom of the exterior ringwall foundation to the adjacent outside finished grades.

Settlement analysis for the proposed structures was performed using the computer program ("Settle3D" by Rocscience) which models the subsurface conditions as a layered soil profile. Published correlations relying on the SPT N-values were used to estimate the elastic moduli for the soils. Westergaard stress distribution method was used for calculating the stress changes caused by the estimated weight of the proposed fill and tanks in the underlying foundation soils. Specifically, a uniform soil bearing pressure was applied at a depth of 1-foot below the exiting ground surface over an 85-foot diameter area for the Ground Storage Tank. For the chlorine contact tank and filters, a uniform soil bearing pressure was applied along with an assumed area wide 4-foot fill height.

The soil bearing pressures used for the individual structures and the results of the settlement calculations are presented in the below table.

Tank/Structure	Assumed Bearing Pressure (psf)	Estimated Max Total Settlement (inch)	Estimated Max Differential Settlement (inch)
Ground Storage Tank	1,500	2.8	1.4
Chlorine Contact Tank and Filters	750	1.9	0.5

We estimate that around 70% of the settlement will be elastic in nature, occurring as the loads are applied. This includes a portion of the settlement that will occur due to the placement of the assumed approximate 4-foot fill height, which is included in the calculated settlements presented in the foregoing table. The remaining settlement may be attributed to longer term consolidation of clay soils.

We recommended that utility connections to the tanks be flexible enough to accommodate the settlement and that final fitting of connectors be undertaken after the tanks have been subjected to initial loading.

Output from the Settle3D computer program is included in Appendix III for informational purposes.

Excavation Backfill

Backfill placed adjacent to the structure walls (if necessary) should consist of granular soils that are free draining and relatively free of fines. The backfill within 5 feet of the structure walls should be placed in thin lifts and compacted with hand-held compactors to between 95 and 100 percent of the modified Proctor (ASTM D-1557) maximum dry density value. Overcompaction of the backfill should be avoided since it could cause excessively large earth pressures to develop against the walls. Heavy equipment should be kept at least 5 feet away from the wall.

Dewatering

The control of the groundwater may be required to achieve the necessary stripping and subsequent construction, backfilling, and compaction requirements presented in the preceding sections. The requirement for control of groundwater should particularly be anticipated for footing and utility excavations. The actual method(s) of dewatering should be determined by the contractor. However, regardless of the method(s) used, we suggest drawing down the water table sufficiently, say 2 to 3 feet, below the bottom of any excavation or compaction surface to preclude "pumping" and/or compaction-related problems with the foundation soils.

Dewatering should be accomplished with the knowledge that the permeability of soil tends to decrease with an increasing silt and clay content. Therefore, a silty fine sand is typically less permeable than a fine sand. The contractor should also be aware that cuts may expose confined aquifers where relatively permeable sandy soils underlie less permeable zones of clayey soils. These relatively permeable zones may require dewatering efforts to include relatively deep full aquifer penetrating wells, airlift of water from wells, trench drains, seepage barriers, etc.

Lined Reservoir

We understand that lined reservoir is planned. For this study, soil conditions were explored in the proposed reservoir areas with 5 Standard Penetration Test borings to depths of 25 and 100 feet. In addition, a total of five field permeability tests were performed.

The results of the falling head field permeability tests are presented in the following table:

Test Location	Soil Type	Test Depth (feet)	Measured Permeability (feet/day)
SB - 9	Fine sand with silt (SP-SM)	14 - 15	1
SB - 10	Fine sand with silt (SP-SM)	10 - 11	1
SB - 11	Fine sand (SP)	7 - 8	5½
SB - 12	Fine sand with silt (SP-SM)	12 - 13	<1
SB - 13	Fine sand (SP)	14 - 15	<1

For the type of soils tested, a transformation ratio of 1 horizontal to 1 vertical is appropriate (i.e; the estimated ratio of horizontal to vertical permeability).

QUALITY ASSURANCE

We recommend establishing a comprehensive quality assurance program to verify that all site preparation and foundation construction is conducted in accordance with the appropriate plans and specifications. Materials testing and inspection services should be provided by Ardaman & Associates.

As a minimum, an on-site engineering technician should monitor all stripping and grubbing to verify that all deleterious materials have been removed and should observe the proof-rolling operation to verify that the appropriate number of passes are applied to the subgrade. In-situ density tests should be conducted during filling activities and below all footings and floor slabs to verify that the required densities have been achieved. In-situ density values should be compared to laboratory Proctor moisture-density results for each of the different natural and fill soils encountered.

Finally, we recommend inspecting and testing the construction materials for the foundations and other structural components.

IN-PLACE DENSITY TESTING FREQUENCY

In Central Florida, earthwork testing is typically performed on an on-call basis when the contractor has completed a portion of the work. The test result from a specific location is only representative of a larger area if the contractor has used consistent means and methods and the soils are practically uniform throughout. The frequency of testing can be increased and full-time construction inspection can be provided to account for variations. We recommend that the following minimum testing frequencies be utilized.

In proposed structural areas, the minimum frequency of in-place density testing should be reduced to one test for each 2,500 square feet of structural area. In-place density testing should

be performed at this minimum frequency for a depth of 2 feet below natural ground and for every 1-foot lift of fill placed in the structural area. In addition, density tests should be performed in each column footing for a depth of 2 feet below the bearing surface. For continuous or wall footings, density tests should be performed at a minimum frequency of one test for every 50 linear feet of footing, and for a depth of 2 feet below the bearing surface.

Representative samples of the various natural ground and fill soils, as well as stabilized subgrade (where applicable) and base materials should be obtained and transported to our laboratory for Proctor compaction tests. These tests will determine the maximum dry density and optimum moisture content for the materials tested and will be used in conjunction with the results of the in-place density tests to determine the degree of compaction achieved.

CLOSURE

The analyses and recommendations submitted herein are based on the data obtained from the soil borings presented on Figures 4 through 6 and the assumed loading conditions. This report does not reflect any variations which may occur adjacent to or between the borings. The nature and extent of the variations between the borings may not become evident until during construction. If variations then appear evident, it will be necessary to re-evaluate the recommendations presented in this report after performing on-site observations during the construction period and noting the characteristics of the variations.

In the event any changes occur in the design, nature, or location of the proposed facility, we should review the applicability of conclusions and recommendations in this report. We recommend a general review of final design and specifications by our office to verify that earthwork and foundation recommendations are properly interpreted and implemented in the design specifications. Ardaman and Associates should attend the pre-bid and preconstruction meetings to verify that the bidders/contractor understand the recommendations contained in this report.

This study is based on a relatively shallow exploration and is not intended to be an evaluation for sinkhole potential. This study does not include an evaluation of the environmental (ecological or hazardous/toxic material related) condition of the site and subsurface.

This report has been prepared for the exclusive use of Tetra Tech in accordance with generally accepted geotechnical engineering practices for the purpose of supporting the proposed treatment plant improvements. No other warranty, expressed or implied, is made.

We are pleased to be of assistance to you on this phase of the project. When we may be of further service to you or should you have any questions, please contact us.

Very truly yours,
ARDAMAN & ASSOCIATES, INC.
Certificate of Authorization No. 5950

Alexandra G. Aydelotte, E.I.
Assistant Project Engineer

Colin T. Jewsbury, P.E.
Senior Engineer
Florida License No. 58074

AGA/CTJ/jj
15-6344 TT Treatment Plant Alexander Ave (2015 Geo)

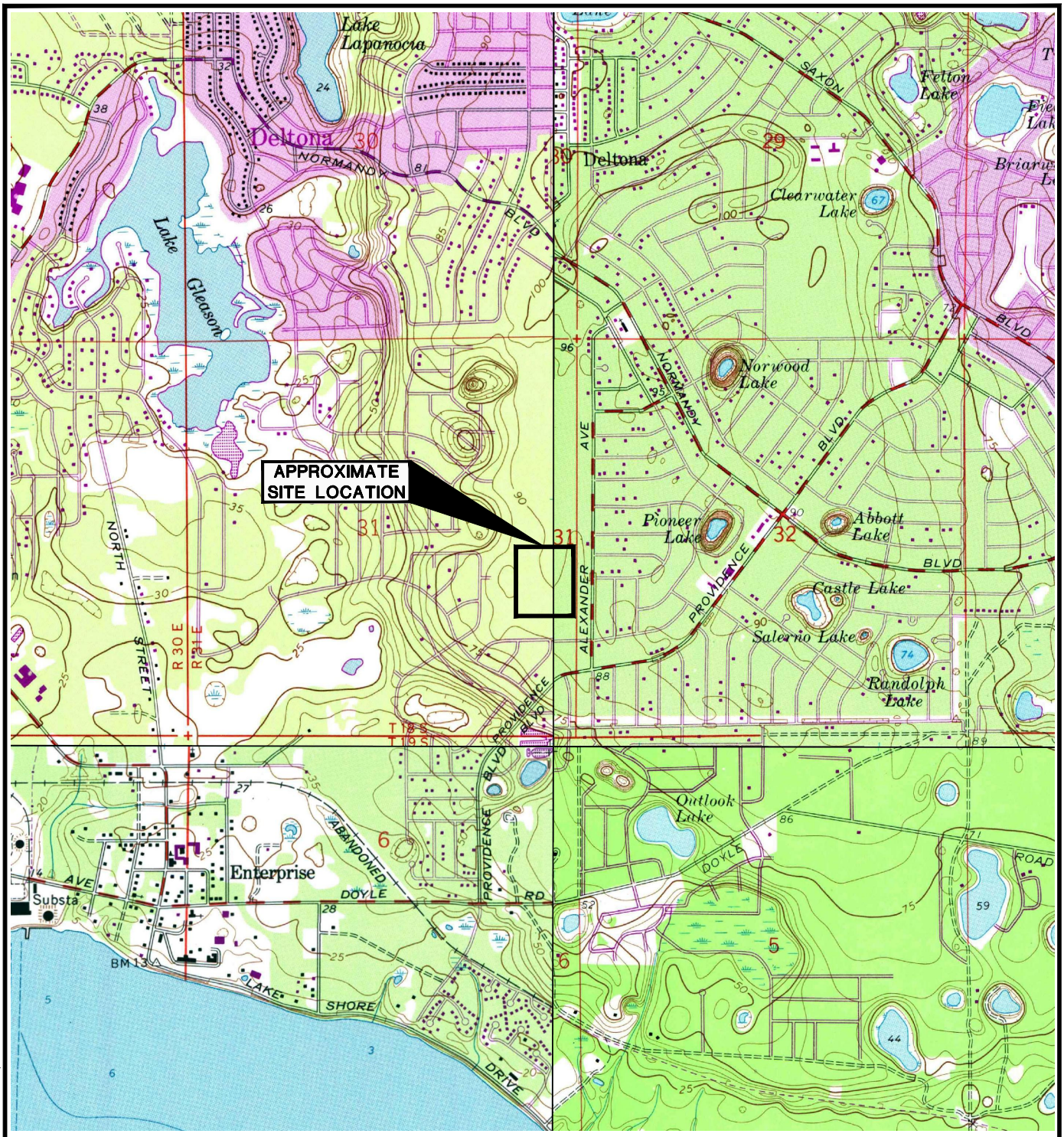

SECTION 31
TOWNSHIP 18 SOUTH
RANGE 30 EAST

OBTAINED FROM U.S.G.S. QUAD MAP: LAKE HELEN, FLORIDA 1953
AND ORANGE CITY, FLORIDA 1980

N

0 1000 2000

APPROXIMATE SCALE: 1"=2000'

QUADRANGLE LOCATION

SITE LOCATION MAP

Ardaman & Associates, Inc.
Geotechnical, Environmental and Materials Consultants

SUBSURFACE SOIL EXPLORATION
PROPOSED TREATMENT PLANT IMPROVEMENTS
ALEXANDER AVENUE SITE
CITY OF DELTONA, VOLUSIA COUNTY, FLORIDA

DRAWN BY: CD	CHECKED BY:	DATE: 05/11/15
FILE NO. 15-6344	APPROVED BY:	FIGURE: 1

T:\Orlando\15\15-6344\15634401.dwg 5/26/2015 2:44:32 PM, Chris.Drew

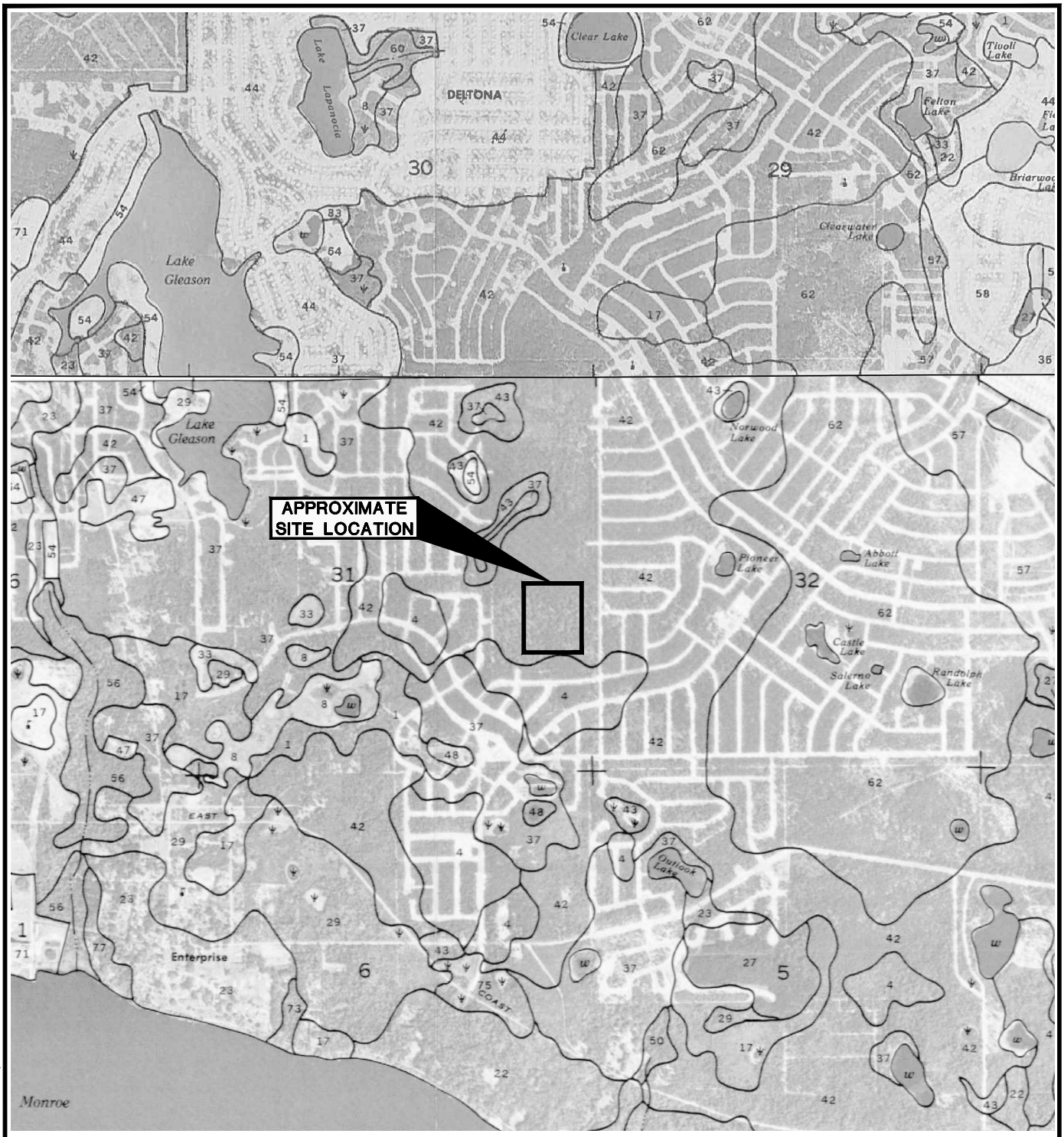

OBTAINED FROM: SOIL SURVEY OF VOLUSIA COUNTY, FLORIDA
ISSUED DATE: FEBRUARY 1980

LEGEND

42 - PAOLA FINE SANDS, 0 TO 8 PERCENT SLOPES

N

0 1000 2000

APPROXIMATE SCALE: 1"=2000'

SOIL SURVEY MAP

Ardaman & Associates, Inc.
Geotechnical, Environmental and Materials Consultants

SUBSURFACE SOIL EXPLORATION
PROPOSED TREATMENT PLANT IMPROVEMENTS
ALEXANDER AVENUE SITE
CITY OF DELTONA, VOLUSIA COUNTY, FLORIDA

DRAWN BY: CD	CHECKED BY:	DATE: 05/11/15
FILE NO. 15-6344	APPROVED BY:	FIGURE: 2

T:\Orlando\15\15-6344\15634401.dwg 5/26/2015 2:44:38 PM, Chris.Drew

Redacted per Florida Statute 119.071 (3)b1

Page 261

BORING LOCATION PLAN

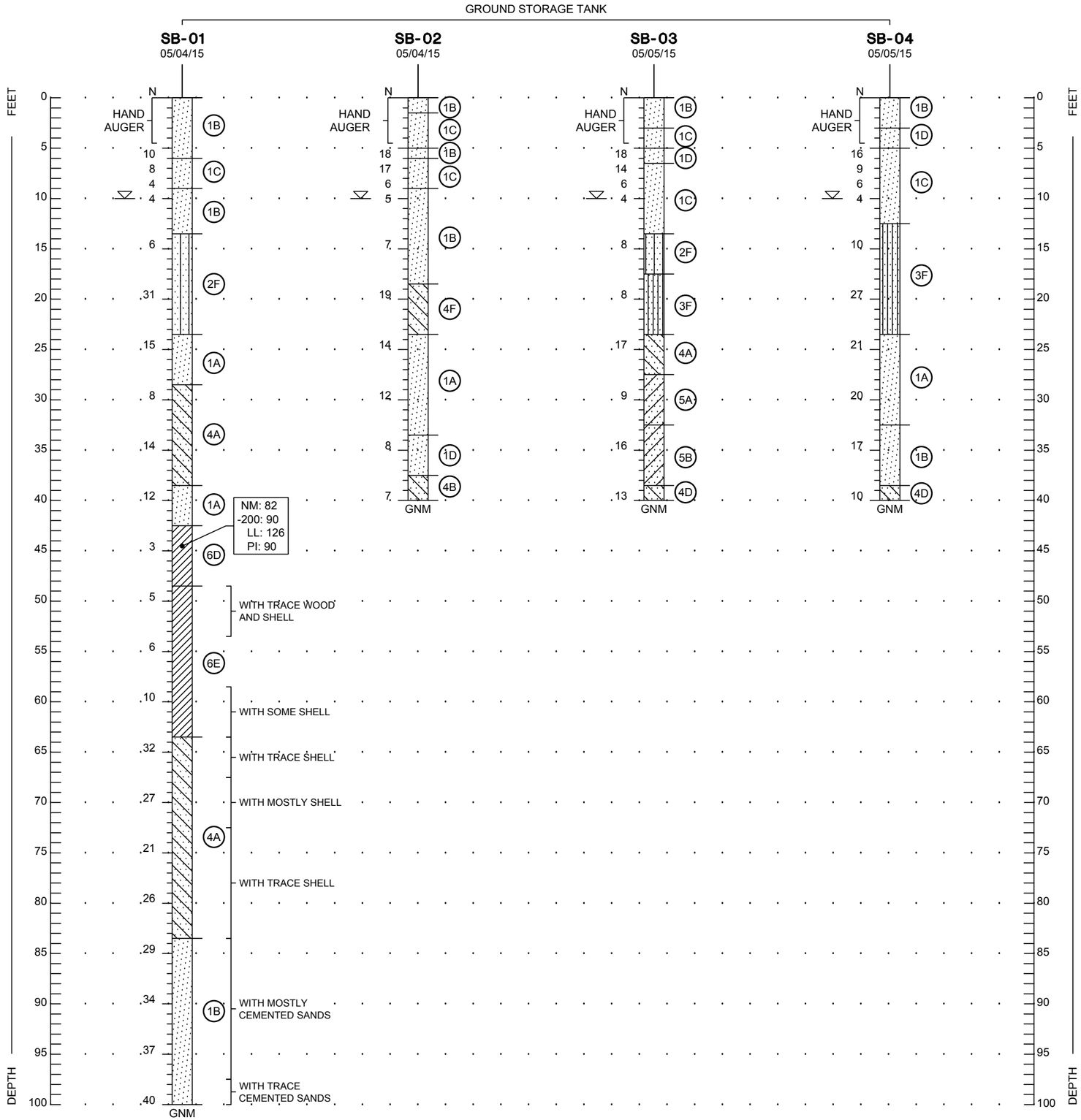

LEGEND

SOIL DESCRIPTIONS

1. FINE SAND (SP)
2. FINE SAND WITH SILT (SP-SM)
3. SILTY FINE SAND (SM)
4. FINE SAND WITH CLAY (SP-SC)
5. CLAYEY FINE SAND (SC)
6. CLAY (CL/CH)
7. GRAVEL

COLORS

- A LIGHT GRAYISH BROWN TO GRAYISH BROWN
- B VERY LIGHT BROWN TO LIGHT BROWN
- C LIGHT ORANGE-BROWN
- D LIGHT GRAY TO GRAY
- E LIGHT GREENISH GRAY TO GREENISH GRAY
- F BROWN TO DARK BROWN

TH	STANDARD PENETRATION TEST (SPT) BORING
N	STANDARD PENETRATION RESISTANCE IN BLOWS PER FOOT
NM	NATURAL MOISTURE CONTENT IN PERCENT (ASTM D-2216)
-200	PERCENT PASSING NO. 200 SIEVE SIZE (PERCENT FINES)(ASTM D-1140)
LL	LIQUID LIMIT (ASTM D-4318)
PI	PLASTICITY INDEX (ASTM D-4318)
▼	GROUNDWATER LEVEL MEASURED ON DATE DRILLED
▽	ESTIMATED NORMAL SEASONAL HIGH GROUNDWATER LEVEL
GNM	GROUNDWATER NOT MEASURED (i.e., NOT ENCOUNTERED IN THE TOP 10 FEET AND NOT MEASURED BELOW 10 FEET DUE TO THE MUDDED CONDITION OF THE BOREHOLE)
SP,SP-SM SM,SC,CH	UNIFIED SOIL CLASSIFICATION SYSTEM (ASTM D-2487)

NOTES:

1. UPON COMPLETION OF EACH SPT BORING, THE BOREHOLE WAS GROUTED WITH CEMENT-BENTONITE SLURRY.
2. ALL SPT BORINGS WERE PERFORMED USING A SAFETY HAMMER IN THE UPPER 10 FEET AND AN AUTOMATIC HAMMER BELOW 10 FEET TO THE BORING TERMINATION DEPTH. AUTOMATIC HAMMER N-VALUES MAY BE CONVERTED TO EQUIVALENT SAFETY HAMMER N-VALUES BY MULTIPLYING BY 1.24.

ENGINEERING CLASSIFICATION

I COHESIONLESS SOILS

DESCRIPTION	BLOW COUNT "N"
VERY LOOSE	<4
LOOSE	4 TO 10
MEDIUM DENSE	10 TO 30
DENSE	30 TO 50
VERY DENSE	>50

II COHESIVE SOILS

DESCRIPTION	UNCONFINED COMPRESSIVE STRENGTH, QU, TSF	BLOW COUNT "N"
VERY SOFT	<1/4	<2
SOFT	1/4 TO 1/2	2 TO 4
MEDIUM STIFF	1/2 TO 1	4 TO 8
STIFF	1 TO 2	8 TO 15
VERY STIFF	2 TO 4	15 TO 30
HARD	>4	>30

WHILE THE BORINGS ARE REPRESENTATIVE OF SUBSURFACE CONDITIONS AT THEIR RESPECTIVE LOCATIONS AND FOR THEIR RESPECTIVE VERTICAL REACHES, LOCAL VARIATIONS CHARACTERISTIC OF THE SUBSURFACE MATERIALS OF THE REGION ARE ANTICIPATED AND MAY BE ENCOUNTERED. THE BORING LOGS AND RELATED INFORMATION ARE BASED ON THE DRILLER'S LOGS AND VISUAL EXAMINATION OF SELECTED SAMPLES IN THE LABORATORY. THE DELINEATION BETWEEN SOIL TYPES SHOWN ON THE LOGS IS APPROXIMATE AND THE DESCRIPTION REPRESENTS OUR INTERPRETATION OF SUBSURFACE CONDITIONS AT THE DESIGNATED BORING LOCATIONS ON THE PARTICULAR DATE DRILLED.

GROUNDWATER ELEVATIONS SHOWN ON THE BORING LOGS REPRESENT GROUNDWATER SURFACES ENCOUNTERED ON THE DATES SHOWN. FLUCTUATIONS IN WATER TABLE LEVELS SHOULD BE ANTICIPATED THROUGHOUT THE YEAR. ABSENCE OF WATER SURFACE DATA IN THE BORING IMPLIES THAT NO GROUNDWATER DATA IS AVAILABLE, BUT DOES NOT NECESSARILY MEAN THAT GROUNDWATER WILL NOT BE ENCOUNTERED AT THIS LOCATION OR WITHIN THE VERTICAL REACHES OF THIS BORING IN THE FUTURE.

SHELL CONTENT

TRACE: <5%
FEW: 5 TO 10%
LITTLE: 15 TO 25%
SOME: 30 TO 45%
MOSTLY: 50 TO 100%

SOIL BORING PROFILES

Ardaman & Associates, Inc.
Geotechnical, Environmental and Materials Consultants

SUBSURFACE SOIL EXPLORATION
PROPOSED TREATMENT PLANT IMPROVEMENTS
ALEXANDER AVENUE SITE
CITY OF DELTONA, VOLUSIA COUNTY, FLORIDA

DRAWN BY: CD	CHECKED BY:	DATE: 05/11/15
FILE NO. 15-6344	APPROVED BY:	FIGURE: 4

T:\Orlando\15\15-6344\15634403.dwg 5/26/2015 2:44:48 PM, Chris.Drew

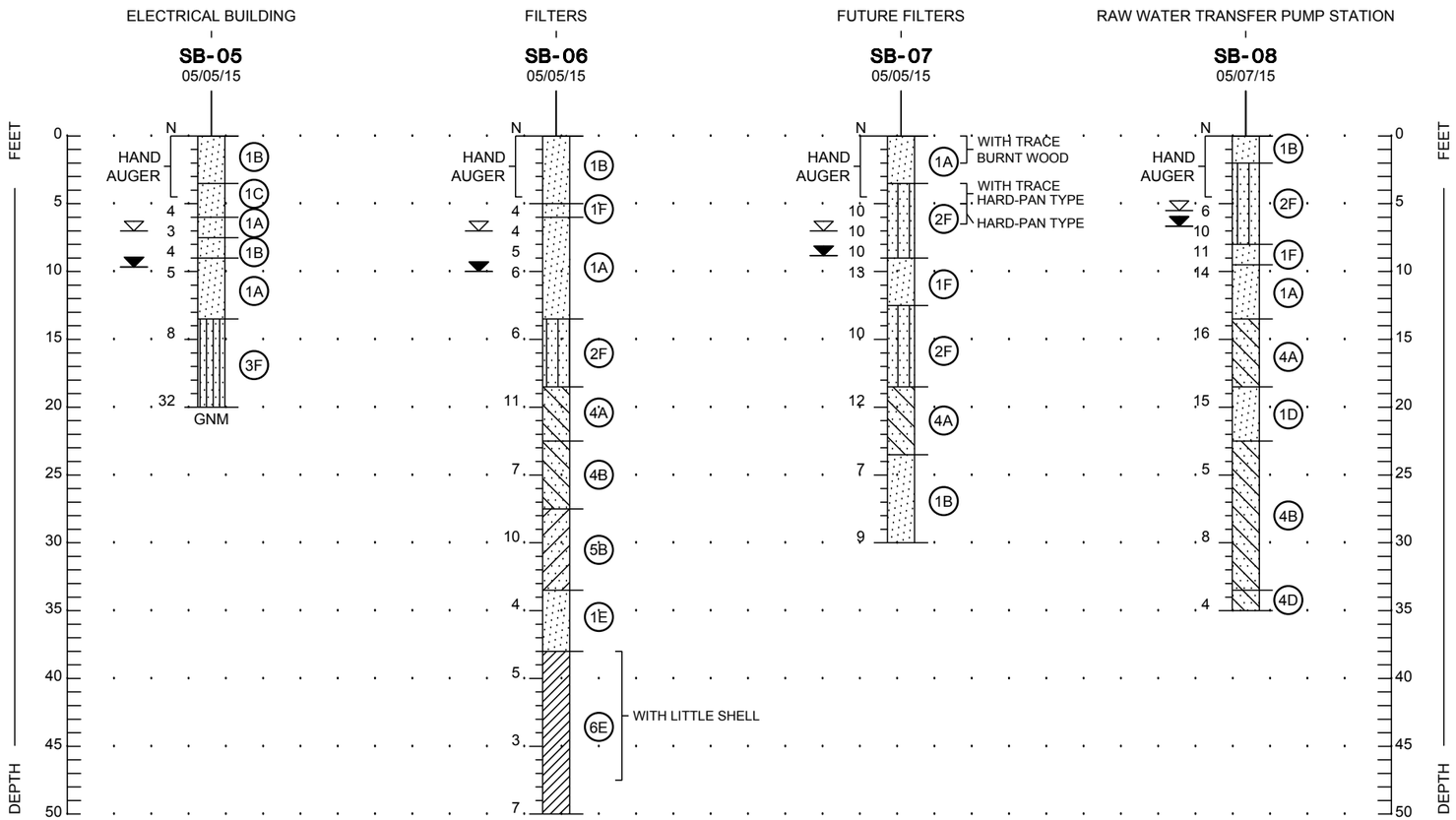

LEGEND

SOIL DESCRIPTIONS

1. FINE SAND (SP)
2. FINE SAND WITH SILT (SP-SM)
3. SILTY FINE SAND (SM)
4. FINE SAND WITH CLAY (SP-SC)
5. CLAYEY FINE SAND (SC)
6. CLAY (CL/CH)
7. GRAVEL

COLORS

A. LIGHT GRAYISH BROWN TO GRAYISH BROWN
B. VERY LIGHT BROWN TO LIGHT BROWN
C. LIGHT ORANGE-BROWN
D. LIGHT GRAY TO GRAY
E. LIGHT GREENISH GRAY TO GREENISH GRAY
F. BROWN TO DARK BROWN

TH	STANDARD PENETRATION TEST (SPT) BORING
N	STANDARD PENETRATION RESISTANCE IN BLOWS PER FOOT
NM	NATURAL MOISTURE CONTENT IN PERCENT (ASTM D-2216)
-200	PERCENT PASSING NO. 200 SIEVE SIZE (PERCENT FINES)(ASTM D-1140)
LL	LIQUID LIMIT (ASTM D-4318)
PI	PLASTICITY INDEX (ASTM D-4318)
▼	GROUNDWATER LEVEL MEASURED ON DATE DRILLED
▽	ESTIMATED NORMAL SEASONAL HIGH GROUNDWATER LEVEL
GNM	GROUNDWATER NOT MEASURED (i.e., NOT ENCOUNTERED IN THE TOP 10 FEET AND NOT MEASURED BELOW 10 FEET DUE TO THE MUDDED CONDITION OF THE BOREHOLE)
SP,SP-SM SM,SC,CH	UNIFIED SOIL CLASSIFICATION SYSTEM (ASTM D-2487)

NOTES:

1. UPON COMPLETION OF SPT BORING SB-06, THE BOREHOLE WAS GROUTED WITH CEMENT-BENTONITE SLURRY.
2. UPON COMPLETION OF SPT BORINGS SB-05, SB-07 AND SB-08, THE BOREHOLE WAS BACKFILLED WITH SOIL CUTTINGS.
3. ALL SPT BORINGS WERE PERFORMED USING A SAFETY HAMMER IN THE UPPER 10 FEET AND AN AUTOMATIC HAMMER BELOW 10 FEET TO THE BORING TERMINATION DEPTH. AUTOMATIC HAMMER N-VALUES MAY BE CONVERTED TO EQUIVALENT SAFETY HAMMER N-VALUES BY MULTIPLYING BY 1.24.

SHELL CONTENT

TRACE: <5%
FEW: 5 TO 10%
LITTLE: 15 TO 25%
SOME: 30 TO 45%
MOSTLY: 50 TO 100%

ENGINEERING CLASSIFICATION

I COHESIONLESS SOILS

DESCRIPTION	BLOW COUNT "N"
VERY LOOSE	<4
LOOSE	4 TO 10
MEDIUM DENSE	10 TO 30
DENSE	30 TO 50
VERY DENSE	>50

II COHESIVE SOILS

DESCRIPTION	UNCONFINED COMPRESSIVE STRENGTH, QU, TSF	BLOW COUNT "N"
VERY SOFT	<1/4	<2
SOFT	1/4 TO 1/2	2 TO 4
MEDIUM STIFF	1/2 TO 1	4 TO 8
STIFF	1 TO 2	8 TO 15
VERY STIFF	2 TO 4	15 TO 30
HARD	>4	>30

WHILE THE BORINGS ARE REPRESENTATIVE OF SUBSURFACE CONDITIONS AT THEIR RESPECTIVE LOCATIONS AND FOR THEIR RESPECTIVE VERTICAL REACHES, LOCAL VARIATIONS CHARACTERISTIC OF THE SUBSURFACE MATERIALS OF THE REGION ARE ANTICIPATED AND MAY BE ENCOUNTERED. THE BORING LOGS AND RELATED INFORMATION ARE BASED ON THE DRILLER'S LOGS AND VISUAL EXAMINATION OF SELECTED SAMPLES IN THE LABORATORY. THE DELINEATION BETWEEN SOIL TYPES SHOWN ON THE LOGS IS APPROXIMATE AND THE DESCRIPTION REPRESENTS OUR INTERPRETATION OF SUBSURFACE CONDITIONS AT THE DESIGNATED BORING LOCATIONS ON THE PARTICULAR DATE DRILLED.

GROUNDWATER ELEVATIONS SHOWN ON THE BORING LOGS REPRESENT GROUNDWATER SURFACES ENCOUNTERED ON THE DATES SHOWN. FLUCTUATIONS IN WATER TABLE LEVELS SHOULD BE ANTICIPATED THROUGHOUT THE YEAR. ABSENCE OF WATER SURFACE DATA IN THE BORING IMPLIES THAT NO GROUNDWATER DATA IS AVAILABLE, BUT DOES NOT NECESSARILY MEAN THAT GROUNDWATER WILL NOT BE ENCOUNTERED AT THIS LOCATION OR WITHIN THE VERTICAL REACHES OF THIS BORING IN THE FUTURE.

SOIL BORING PROFILES

Ardaman & Associates, Inc.
Geotechnical, Environmental and Materials Consultants

SUBSURFACE SOIL EXPLORATION
PROPOSED TREATMENT PLANT IMPROVEMENTS
ALEXANDER AVENUE SITE
CITY OF DELTONA, VOLUSIA COUNTY, FLORIDA

DRAWN BY: CD	CHECKED BY:	DATE: 05/11/15
FILE NO. 15-6344	APPROVED BY:	FIGURE: 5

T:\Orlando\15\15-6344\15634403.dwg 5/26/2015 2:44:56 PM, Chris.Drew

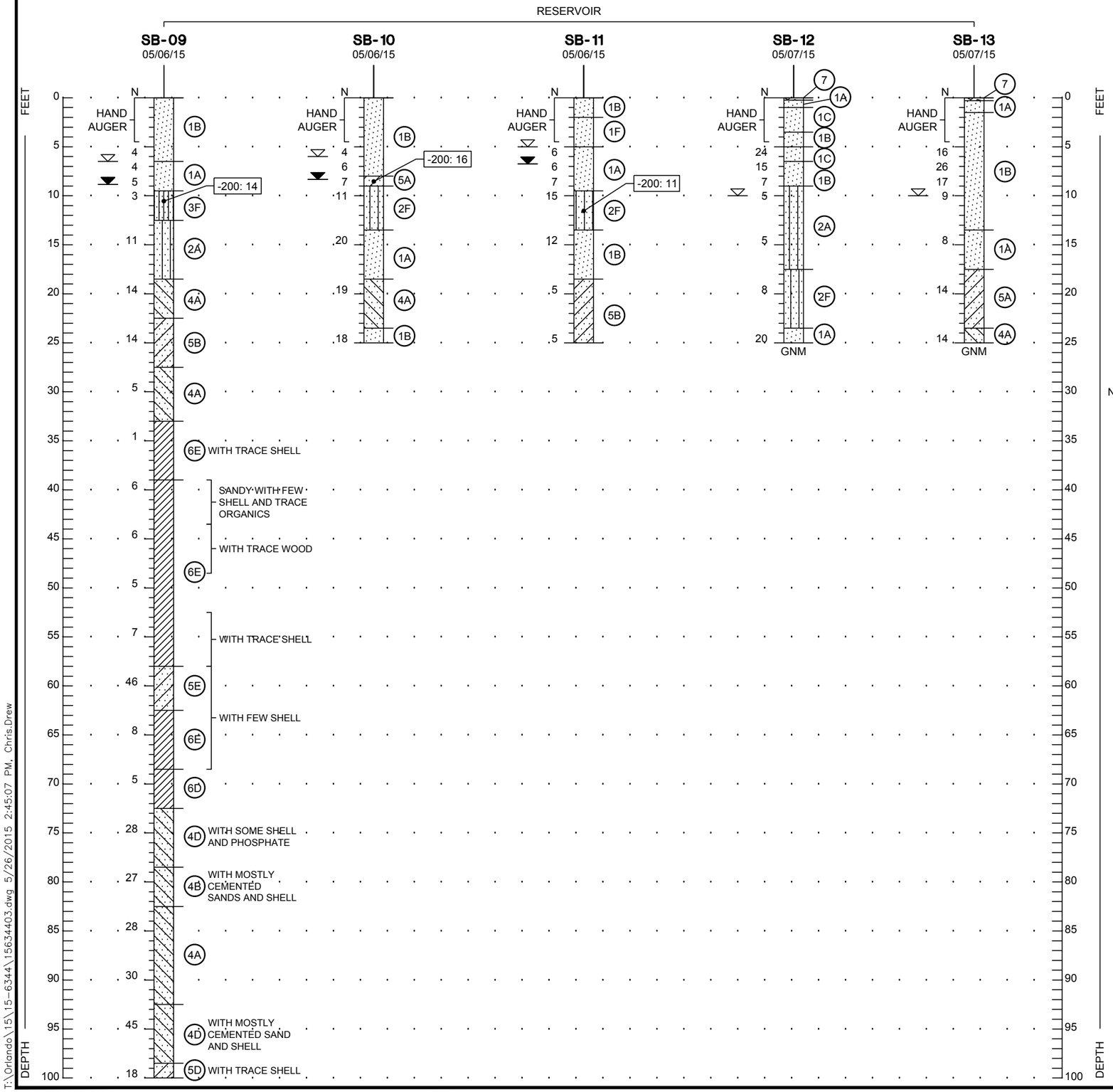

T:\Orlando\15\15-6344\15634403.dwg 5/26/2015 2:45:07 PM, Chris.Drew

LEGEND

SOIL DESCRIPTIONS

1. FINE SAND (SP)
2. FINE SAND WITH SILT (SP-SM)
3. SILTY FINE SAND (SM)
4. FINE SAND WITH CLAY (SP-SC)
5. CLAYEY FINE SAND (SC)
6. CLAY (CL/CH)
7. GRAVEL

COLORS

- A LIGHT GRAYISH BROWN TO GRAYISH BROWN
- B VERY LIGHT BROWN TO LIGHT BROWN
- C LIGHT ORANGE-BROWN
- D LIGHT GRAY TO GRAY
- E LIGHT GREENISH GRAY TO GREENISH GRAY
- F BROWN TO DARK BROWN

TH	STANDARD PENETRATION TEST (SPT) BORING
N	STANDARD PENETRATION RESISTANCE IN BLOWS PER FOOT
NM	NATURAL MOISTURE CONTENT IN PERCENT (ASTM D-2216)
-200	PERCENT PASSING NO. 200 SIEVE SIZE (PERCENT FINES)(ASTM D-1140)
LL	LIQUID LIMIT (ASTM D-4318)
PI	PLASTICITY INDEX (ASTM D-4318)
▼	GROUNDWATER LEVEL MEASURED ON DATE DRILLED
▽	ESTIMATED NORMAL SEASONAL HIGH GROUNDWATER LEVEL
GNM	GROUNDWATER NOT MEASURED (i.e., NOT ENCOUNTERED IN THE TOP 10 FEET AND NOT MEASURED BELOW 10 FEET DUE TO THE MUDDED CONDITION OF THE BOREHOLE)
SP,SP-SM SM,SC,CH	UNIFIED SOIL CLASSIFICATION SYSTEM (ASTM D-2487)

NOTES:
1. UPON COMPLETION OF SPT BORING SB-09, THE BOREHOLE WAS GROUTED WITH CEMENT-BENTONITE SLURRY.
2. UPON COMPLETION OF SPT BORINGS SB-10 THROUGH SB-13, THE BOREHOLE WAS BACKFILLED WITH SOIL CUTTINGS.
3. ALL SPT BORINGS WERE PERFORMED USING A SAFETY HAMMER IN THE UPPER 10 FEET AND AN AUTOMATIC HAMMER BELOW 10 FEET TO THE BORING TERMINATION DEPTH. AUTOMATIC HAMMER N-VALUES MAY BE CONVERTED TO EQUIVALENT SAFETY HAMMER N-VALUES BY MULTIPLYING BY 1.24.

ENGINEERING CLASSIFICATION

I COHESIONLESS SOILS

DESCRIPTION	BLOW COUNT "N"
VERY LOOSE	<4
LOOSE	4 TO 10
MEDIUM DENSE	10 TO 30
DENSE	30 TO 50
VERY DENSE	>50

II COHESIVE SOILS

DESCRIPTION	UNCONFINED COMPRESSIVE STRENGTH, QU, TSF	BLOW COUNT "N"
VERY SOFT	<1/4	<2
SOFT	1/4 TO 1/2	2 TO 4
MEDIUM STIFF	1/2 TO 1	4 TO 8
STIFF	1 TO 2	8 TO 15
VERY STIFF	2 TO 4	15 TO 30
HARD	>4	>30

WHILE THE BORINGS ARE REPRESENTATIVE OF SUBSURFACE CONDITIONS AT THEIR RESPECTIVE LOCATIONS AND FOR THEIR RESPECTIVE VERTICAL REACHES, LOCAL VARIATIONS CHARACTERISTIC OF THE SUBSURFACE MATERIALS OF THE REGION ARE ANTICIPATED AND MAY BE ENCOUNTERED. THE BORING LOGS AND RELATED INFORMATION ARE BASED ON THE DRILLER'S LOGS AND VISUAL EXAMINATION OF SELECTED SAMPLES IN THE LABORATORY. THE DELINEATION BETWEEN SOIL TYPES SHOWN ON THE LOGS IS APPROXIMATE AND THE DESCRIPTION REPRESENTS OUR INTERPRETATION OF SUBSURFACE CONDITIONS AT THE DESIGNATED BORING LOCATIONS ON THE PARTICULAR DATE DRILLED.

GROUNDWATER ELEVATIONS SHOWN ON THE BORING LOGS REPRESENT GROUNDWATER SURFACES ENCOUNTERED ON THE DATES SHOWN. FLUCTUATIONS IN WATER TABLE LEVELS SHOULD BE ANTICIPATED THROUGHOUT THE YEAR. ABSENCE OF WATER SURFACE DATA IN THE BORING IMPLIES THAT NO GROUNDWATER DATA IS AVAILABLE, BUT DOES NOT NECESSARILY MEAN THAT GROUNDWATER WILL NOT BE ENCOUNTERED AT THIS LOCATION OR WITHIN THE VERTICAL REACHES OF THIS BORING IN THE FUTURE.

SHELL CONTENT

TRACE: <5%
FEW: 5 TO 10%
LITTLE: 15 TO 25%
SOME: 30 TO 45%
MOSTLY: 50 TO 100%

SOIL BORING PROFILES

Ardaman & Associates, Inc.
Geotechnical, Environmental and Materials Consultants

SUBSURFACE SOIL EXPLORATION
PROPOSED TREATMENT PLANT IMPROVEMENTS
ALEXANDER AVENUE SITE
CITY OF DELTONA, VOLUSIA COUNTY, FLORIDA

DRAWN BY: CD	CHECKED BY:	DATE: 05/11/15
FILE NO. 15-6344	APPROVED BY:	FIGURE: 6

APPENDIX I

Standard Penetration Test Boring Procedure

STANDARD PENETRATION TEST

The standard penetration test is a widely accepted test method of *in situ* testing of foundation soils (ASTM D 1586). A 2-foot long, 2-inch O.D. split-barrel sampler attached to the end of a string of drilling rods is driven 18 inches into the ground by successive blows of a 140-pound hammer freely dropping 30 inches. The number of blows needed for each 6 inches of penetration is recorded. The sum of the blows required for penetration of the second and third 6-inch increments of penetration constitutes the test result or N-value. After the test, the sampler is extracted from the ground and opened to allow visual examination and classification of the retained soil sample. The N-value has been empirically correlated with various soil properties allowing a conservative estimate of the behavior of soils under load.

The tests are usually performed at 5-foot intervals. The test holes are advanced to the test elevations by rotary drilling with a cutting bit, using circulating fluid to remove the cuttings and hold the fine grains in suspension. The circulating fluid, which is a bentonitic drilling mud, is also used to keep the hole open below the water table by maintaining an excess hydrostatic pressure inside the hole. In some soil deposits, particularly highly pervious ones, NX-size flush-coupled casing must be driven to just above the testing depth to keep the hole open and/or prevent the loss of circulating fluid.

Representative split-spoon samples from the soils are brought to our laboratory in air-tight jars for further evaluation and testing, if necessary. Samples not used in testing are stored for 30 days prior to being discarded.

APPENDIX II

Settle3D Computer Output

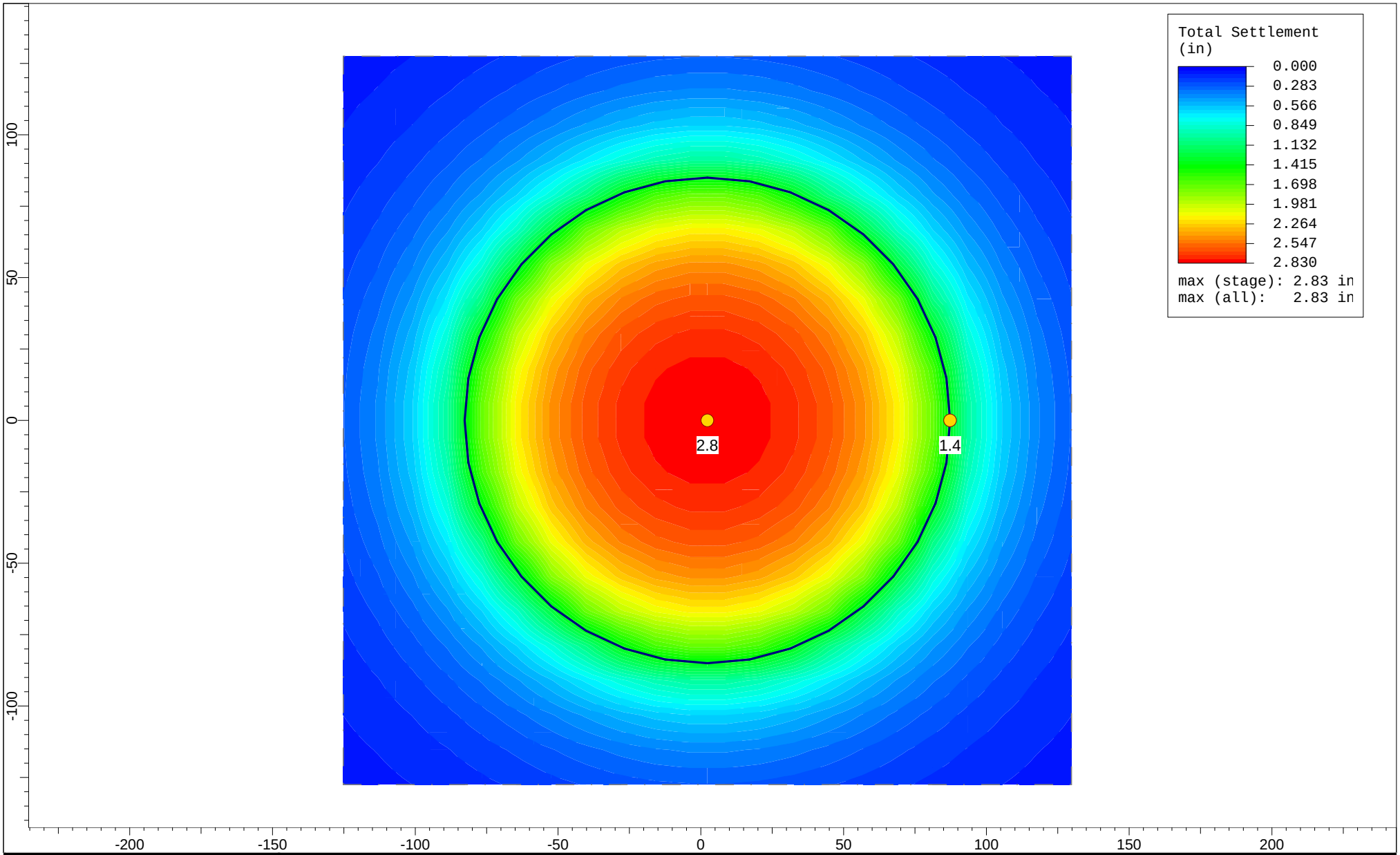

50 Years Ardaman & Associates, Inc.	Project	WWTP Alexander Avenue Deltona	
	Analysis Description	Ground Storage Tank	
	Drawn By	AGA	Company: Ardaman & Associates, Inc.
	Date	5/20/2015, 1:18:27 PM	File Name: 1 MG Ground Storage Tank.s3z

SETTLE3D 2.016

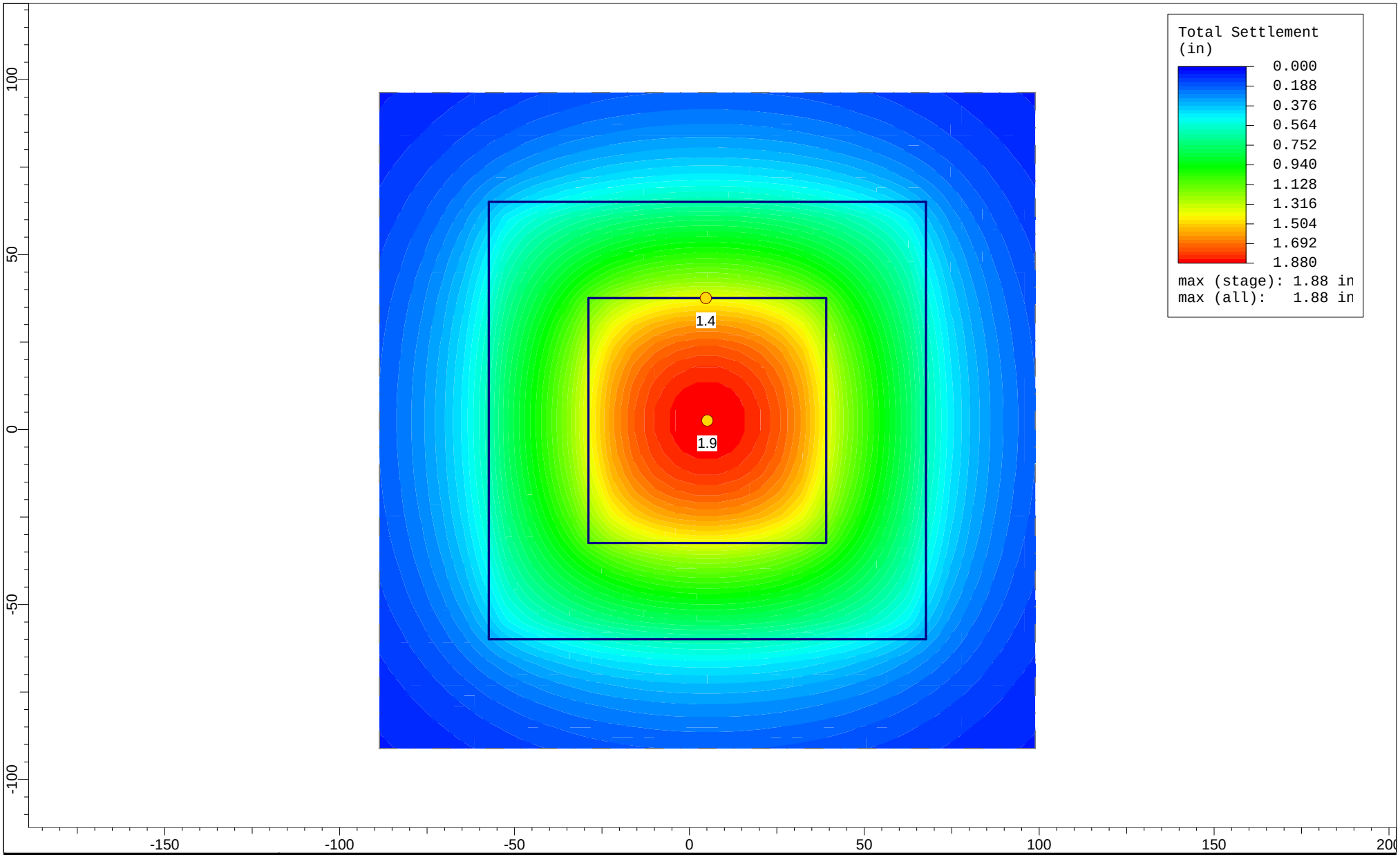

50 Years Ardaman & Associates, Inc.	Project	WWTP Alexander Avenue Deltona	
	Analysis Description	Chlorine Contact Tank	
	Drawn By	AGA	Company: Ardaman & Associates, Inc.
	Date	5/20/2015, 1:18:27 PM	File Name: Chlorine Contact Tank.s3z

SETTLE3D 2.016

Appendix C

Preliminary Bench Evaluation of AquaDisk® Cloth Media Filter Technology for Treating Storm Water Run-Off and Lake Monroe Water for Lake Monroe Reclaimed Water Withdrawal and Treatment Facilities, Deltona, Florida, May 2015

AQUA-AEROBIC SYSTEMS, INC.
Partnering for Solutions

Preliminary Bench Evaluation of AquaDisk® Cloth Media Filter Technology for Treating Storm Water Run-Off and Lake Monroe Water for Lake Monroe Reclaimed Water Withdrawal and Treatment Facilities, Deltona, Florida

---

Testing conducted at:

Aqua-Aerobic Systems, Inc.
Loves Park, IL

18, 21 May 2015

© 2015 Aqua-Aerobic Systems, Inc. ● Department of Research and Development

6306 N. Alpine Rd. Loves Park, IL 61111-7655 p 815.654.2501 f 815.654.2508 www.aqua-aerobic.com

Printed on 5/26/2015

STUDY TITLE:

PRELIMINARY BENCH EVALUATION OF AQUADISK® CLOTH MEDIA FILTER TECHNOLOGY FOR TREATING STORM WATER RUN-OFF AND LAKE MONROE WATER FOR LAKE MONROE RECLAIMED WATER WITHDRAWAL AND TREATMENT FACILITIES, DELTONA, FLORIDA

EXECUTIVE SUMMARY:

The primary objective of this preliminary bench study was to determine whether AquaDisk® filter technology in combination with OptiFiber PES-14® polyester microfiber pile medium is able to reduce the TSS levels of storm water run-off and Lake Monroe water samples to ≤5 mg/L. The study's key findings are:

• During a single abbreviated tabletop filter run at a ~3.25 gpm/ft^2 HLR, virgin OptiFiber PES-14 reduced the influent TSS of a storm water run-off grab sample from 13.1 to a 1.1 mg/L average. This corresponds to a 92% reduction rate.

• During a subsequent bench filter run at the same HLR, virgin OptiFiber PES-14 reduced the influent TSS of a Lake Monroe water grab sample from 11.0 to an 8.0 mg/L average. This represents a 33% reduction over the course of the run. This lower reduction compared to that achieved in the storm water run is likely the result of single-cell green algae observed in the pond water influent. Such algae are generally difficult to effectively filter without chemical preconditioning.

The results of this laboratory-scale study are considered valid, however each of the two filter run merely represents a snapshot of filter performance taken during a single set of operating conditions. In addition, storm water and lake water compositions tend to be highly variable and the influents treated during this work were grab samples each collected on a single day and at a single location. Therefore to consistently generate filtrate meeting the stated TSS objective, a commercial-scale AquaDisk filter system should include the ability to inject chemicals to precondition influent. Please refer to

the upcoming *Recommendations for Further Study* text for related comments.

STUDY OBJECTIVES:

The objectives of this preliminary study are to:

• Quantify the storm water run-off and Lake Monroe water sample TSS levels. In addition, the samples' turbidity, particle population distribution, and total alkalinity values will be established. These samples were, respectively, collected on 15 May and 20 May at a storm water pump station and off the end of a boat ramp at a ~two-foot depth in Lake Monroe.

• Determine whether OptiFiber PES-14 pile filter medium is capable of reducing the TSS levels of the storm and lake water samples to meet the ≤5 mg/L TSS objective required by Florida Public Access Reuse. This will be achieved by passing both streams through sections of hydrated virgin filter medium secured in a hydraulically-controllable tabletop filtration apparatus at a ~3.25 gpm/ft^2 hydraulic loading rate. Turbidity and particle population reductions will also be monitored.

• Monitor headloss through the bench filtration apparatus during both the storm water and lake water filter runs.

STUDY RESULTS:

The results of this bench study are:

• The as-received storm water run-off and Lake Monroe water samples were analyzed in-house and the results, presented in Table 1, show respective 13.1 and 11.9 mg/L TSS values. Corresponding turbidity levels were 5.05 and 13.4 NTU. Particle analyses reflect much higher populations of smaller particles in the Lake Monroe water sample, most of which is attributed to single-cell green algae. The bulk lake water sample exhibited a medium gold-brown color, however distinct green staining

appeared on the filter paper used to determine TSS. The streams' total alkalinity values were ~60-65 mg/L expressed as $CaCO_3$.

• In a single abbreviated bench filter run completed at a ~3.25 gpm/ft^2 hydraulic loading rate, OptiFiber PES-14 was able to reduce the storm water sample TSS from 13.1 to a 1.1 mg/L average. This corresponds to a 92% reduction rate. Influent turbidity at the same time was reduced from 5.05 to a 1.15 NTU average for a 77% removal efficiency. Influent particle populations were reduced in all of the eight monitored size channels. These reductions increased with increasing particle size and ranged from about 13 to 95%.

In a follow-up OptiFiber PES-14 run at the same hydraulic loading rate, the Lake Monroe sample TSS was decreased from 11.9 to an 8.0 mg/L TSS average. This reflects 33% removal over the course of the abbreviated run. The lake water sample's turbidity was decreased from 13.4 to an average of 10.4 NTU. This represents a 22% reduction. Particle populations, ranging from about 4 to 60%, were reduced in seven of the eight monitored size channels. In the 2-4 µm channel, a 5% population increase was noted which suggests a small amount of particle shearing perhaps occurred during filtration. These lower TSS, turbidity, and particle reductions, as compared to those observed in the storm water run, are attributed to small single-cell algae that are often difficult to effectively filter without the benefit of chemical preconditioning. The results of the two filter runs may be reviewed in Tables 2 through 4 and Figures 1 through 5.

• Headloss through the filtration apparatus during the storm water filter run increased from about $^1/_8$ to $^1/_2$" while that observed during the lake water run increased to only about $^1/_4$".

RECOMMENDATIONS FOR FURTHER STUDY:

As stated in the *Executive Summary*, the results of this preliminary bench study are considered valid, however each filter run merely represents a snapshot of filter

6306 N. Alpine Rd. Loves Park, IL 61111-7655 p 815.654.2501 f 815.654.2508 www.aqua-aerobic.com

performance taken during a single set of operating conditions. In addition, each influent filtered during the work was a point sample that was collected on a single day at a single location. It's also appropriate to mention that the lab filter runs completed in this work were abbreviated which permitted little medium ripening to occur.

Therefore, considering an extended on-site AquaDisk pilot study is appropriate. Such work would provide a broader spectrum of influents and lengthier repeated filter runs. Prior to and during any pilot work, jar tests to evaluate a variety of chemical cocktails – coagulants and flocculants – should be conducted. Of course, appreciable changes in the influent solids characteristics such as those that occur during algae blooms in the lake would almost certainly require appropriate adjustments to the chemicals, chemical combinations, chemical dosages, and detention times in order to consistently provide high quality filtrate.

NATURE AND SCOPE OF STUDY:

Preliminary

During a rain event on 15 May 2015, two five-gallon volumes of storm water run-off were collected at a storm water pump station. The samples were collected at the end of an outfall pipe positioned about three feet above the surface of Clearwater Lake. The sample was placed in two clean plastic buckets which were sealed and shipped to AASI, Inc. Immediately upon receipt on 18 May, the contents were transferred to a clean plastic tank in the AASI R & D laboratory (71°F). The blended sample was then gently mixed and small samples were collected for in-house analysis. The resulting values appear as Table 1.

On 20 May, two five-gallon volumes of Lake Monroe water were collected at the end of a boat ramp at a depth of about two feet and were shipped the same day by next-day delivery to AASI. Upon arrival the following day, the water was transferred to a clean plastic tank in the AASI R & D laboratory. The blended material was then gently mixed

and samples were collected for in-house analysis. The results are included in Table 1.

OptiFiber PES-14 Filter Run: Storm Water Run-Off:

The as-received storm water sample was passed through a 3.5" square (0.08507 ft^2) of hydrated virgin OptiFiber PES-14 polyester microfiber pile secured vertically in a hydraulically-controllable tabletop filtration apparatus. The hydraulic loading rate was set at ~3.25 gpm/ft^2 (~1.05 L/min) at the beginning of the run. The resulting filtrate stream was collected as a profile consisting of 15 consecutive two-liter composites. A ~500-mL portion of each profile sample was placed in a labeled and sample-rinsed plastic bottle for subsequent TSS and turbidity determinations. The results are incorporated in Tables 2 and 3 as well as in Figures 1 and 3. The remaining ~1.5-L of each profile sample was then transferred to a clean plastic tank to formulate an overall filtrate composite that was later sampled to determine particle population values. Those data may be reviewed in Table 4 and Figure 5.

OptiFiber PES-14 Filter Run: Lake Water:

A second OptiFiber PES-14 run was completed and, with the exception of influent, all operating conditions, sampling, and analyses remained consistent with those of the initial run in which storm water was treated. The influent for this second filter run was the water collected from Lake Monroe on 20 May. The test results are incorporated in Tables 2 through 4 and in Figures 2, 4, and 5

In-House Analytical

TSS analyses were completed using a Mettler Toledo DualRange XS205 laboratory balance and washed and desiccated 4.7-cm diameter Whatman® 934-AH™ (1.5 µm) glass microfiber filter circles according to Method 2540 D, as described by the 22nd Edition of *Standard Methods for the Examination of Water & Wastewater*.

Turbidity analyses were performed using a Hach Model 2100Q portable turbidimeter that was calibrated using Hach's StablCal® Formazin standards. The glass sample cell was initially washed with ~2% Micro-90® detergent solution, flushed with clean tap

water, washed with CLR® solution, then repeatedly rinsed with distilled water. Each turbidity value contained in this report reflects the average of three consecutive instrument readings.

Particle population distribution analyses were conducted using an IBR® (Now NASEC) VersaCount™ particle analyzer that is factory programmed to monitor particle populations in eight size ranges: 2-4, 4-6, 6-10, 10-15, 15-20, 20-25, 25-30, and >30 µm. Each particle value reported in this document reflects the average of three consecutive one-minute instruments completed at a 60 mLs/minute flowrate.

An influent total alkalinity analysis was completed colorimetrically using a Hach Model 3900 UV/vis spectrophotometer according to Hach's Method 10239. The sample was passed through a 0.45 µm membrane prior to analysis.

Daniel J. Binder
Senior R & D Chemist

6306 N. Alpine Rd. Loves Park, IL 61111-7655 p 815.654.2501 f 815.654.2508 www.aqua-aerobic.com

TABLE 1

ANALYSES OF AS-RECEIVED STORM WATER AND LAKE MONROE WATER SAMPLES

(Storm water analyzed 5/18; Lake Monroe water analyzed 5/21)

Analyte	Unit		Storm Water (collected 5/15)	Lake Water (collected 5/20)
TSS	mg/L		13.1	11.9
Turbidity	NTU		5.05	13.4
Total alkalinity	mg/L $CaCO_3$		60.4	64.8
Particles (µm):	counts/100 mL			
2-4	"		559,100	787,900
4-6	"		230,330	520,750
6-10	"		137,070	544,850
10-15	"		56,574	254,920
15-20	"		36,518	107,502
20-25	"		21,347	33,155
25-30	"		7,648	10,075
>30	"		20,013	15,248

TABLE 2

AQUADISK® FILTER RUN TSS RESULTS

Operating Conditions:

• Influents: Storm water run-off (collected 5/15) and Lake Monroe water (collected 5/20)
• In-house chemical preconditioning: None
• Filter medium: OptiFiber PES-14® polyester microfiber pile
• Effective filter area: 3.5" square (0.08507 ft^2)
• Hydraulic loading rate: ~3.25 gpm/ft^2 (~1.05 L/min)

No.	Description	Throughput (L)	Throughput ($gals/ft^2$)		Storm Water (mg/L)[1]	Lake Water (mg/L)[2]
1	**Influent**				**13.1**	**11.9**
2	Filtrate	0-2	0-6		1.5	8.1
3	"	2-4	6-12		1.6	7.5
4	"	4-6	12-19		1.2	8.1
5	"	6-8	19-25		1.2	7.9
6	"	8-10	25-31		1.2	8.2
7	"	10-12	31-37		1.1	8.5
8	"	12-14	37-43		0.9	8.1
9	"	14-16	43-50		1.1	8.4
10	"	16-18	50-56		0.9	7.8
11	"	18-20	56-62		1.0	7.9
12	"	20-22	62-68		1.1	8.0
13	"	22-24	68-75		0.8	8.4
14	"	24-26	75-81		0.9	7.7
15	"	26-28	81-87		0.8	7.7
16	"	28-30	87-93		0.7	8.2
	Ave. Filtrate	**0-30**	**0-93**		**1.1**	**8.0**
	Reduction (%)				**(92)**	**(33)**

Notes:

1. See Figure 1 for a corresponding storm water TSS reduction plot.
2. See Figure 2 for a corresponding lake water TSS reduction plot.

TABLE 3

AQUADISK® FILTER RUN TURBIDITY RESULTS

Operating Conditions:

• Influents: Storm water run-off (collected 5/15) and Lake Monroe water (collected 5/20)
• In-house chemical preconditioning: None
• Filter medium: OptiFiber PES-14® polyester microfiber pile
• Effective filter area: 3.5" square (0.08507 ft^2)
• Hydraulic loading rate: ~3.25 gpm/ft^2 (~1.05 L/min)

No.	Description	Throughput (L)	Throughput (gals/ft^2)		Storm Water (NTU)[1]	Lake Water (NTU)[2]
1	**Influent**				**5.05**	**13.4**
2	Filtrate	0-2	0-6		1.53	10.3
3	"	2-4	6-12		1.39	10.4
4	"	4-6	12-19		1.29	10.7
5	"	6-8	19-25		1.21	9.9
6	"	8-10	25-31		1.22	10.3
7	"	10-12	31-37		1.16	10.4
8	"	12-14	37-43		1.08	10.4
9	"	14-16	43-50		1.04	10.5
10	"	16-18	50-56		1.05	10.1
11	"	18-20	56-62		1.05	10.8
12	"	20-22	62-68		1.11	10.6
13	"	22-24	68-75		1.10	10.3
14	"	24-26	75-81		1.05	10.5
15	"	26-28	81-87		0.94	10.8
16	"	28-30	87-93		1.06	10.4
	Ave. Filtrate	**0-30**	**0-93**		**1.15**	**10.4**
	Reduction (%)				**(77)**	**(22)**

Notes:

1. See Figure 3 for a corresponding storm water turbidity reduction plot.
2. See Figure 4 for a corresponding lake water turbidity reduction plot.

TABLE 4

AQUADISK® FILTER RUN PARTICLE POPULATION RESULTS

Operating Conditions:

• Influents: Storm water run-off (collected 5/15) and Lake Monroe water (collected 5/20)
• In-house chemical conditioning: None
• Filter medium: OptiFiber PES-14® polyester microfiber pile
• Effective filter area: 3.5" x 3.5" (0.08507 ft^2)
• Hydraulic loading rate: ~3.25 gpm/ft^2 (~1.05 L/min)

Size Channel (µm)		Storm Water Inf. (counts/100 mL)	Storm Water Filt. (counts/100 mL)	Reduction (%)[1]		Pond Water Inf. (counts/100 mL)	Pond Water Filt. (counts/100 mL)	Reduction (%)[2]
2-4		559,100	487,640	12.8		787,900	827,800	-5.1
4-6		230,330	157,602	31.6		520,750	500,730	3.8
6-10		137,070	61,560	55.1		544,850	503,880	7.5
10-15		56,574	17,620	68.9		254,920	167,337	34.4
15-20		36,518	9,430	74.2		107,502	58,571	45.5
20-25		21,347	3,652	82.9		33,155	16,331	50.7
25-30		7,648	737	90.4		10,075	4,776	52.6
>30		20,013	1,089	94.6		15,248	6,075	60.2

Notes:

1. See Figure 5 for a corresponding storm water particle reduction plot.
2. See Figure 5 for a corresponding lake water particle reduction plot.

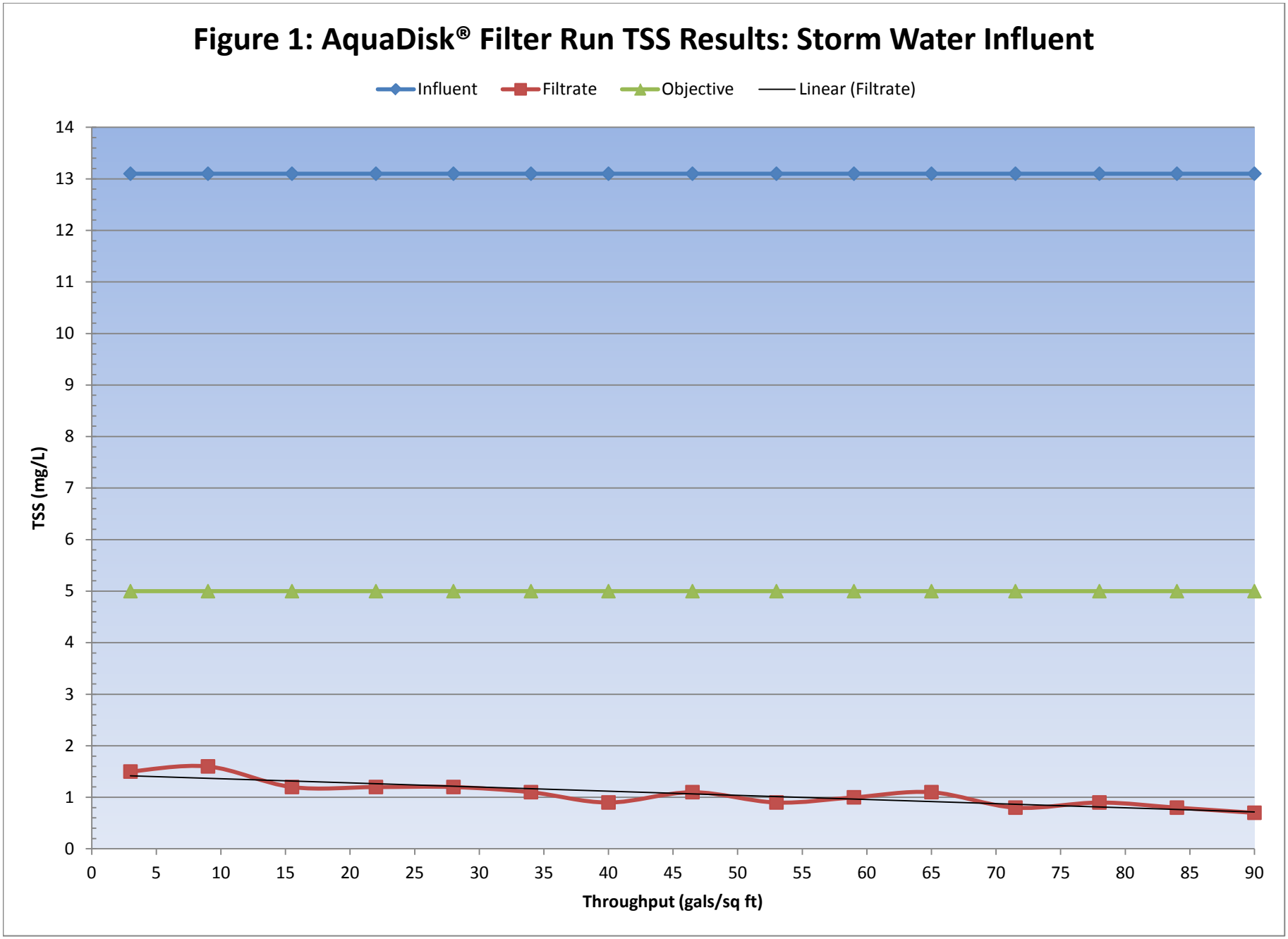
Figure 1: AquaDisk® Filter Run TSS Results: Storm Water Influent
Influent
Filtrate
Objective
Linear (Filtrate)
TSS (mg/L)
0
1
2
3
4
5
6
7
8
9
10
11
12
13
14
0
5
10
15
20
25
30
35
40
45
50
55
60
65
70
75
80
85
90
Throughput (gals/sq ft)

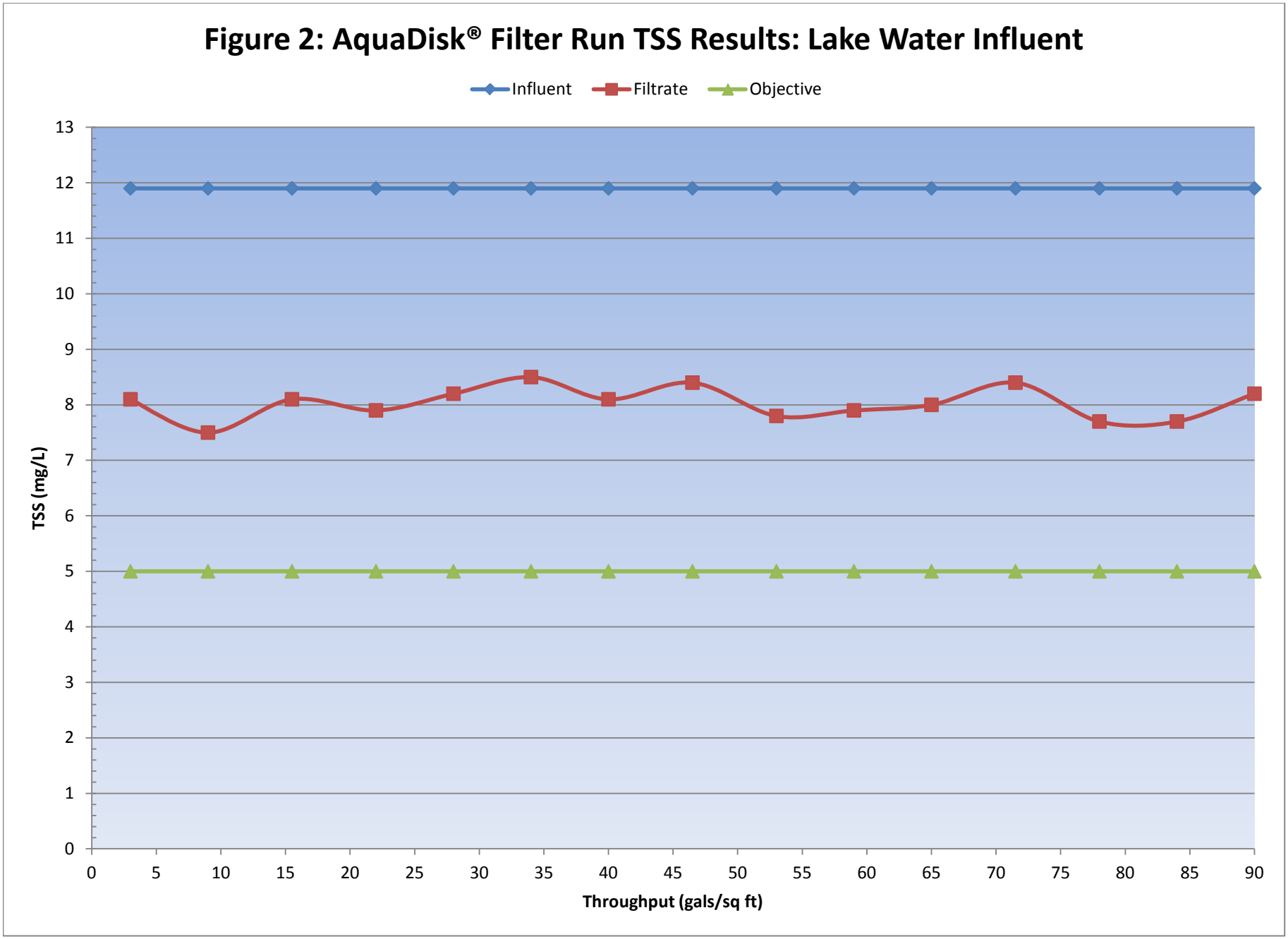
Figure 2: AquaDisk® Filter Run TSS Results: Lake Water Influent
Influent
Filtrate
Objective
TSS (mg/L)
0
1
2
3
4
5
6
7
8
9
10
11
12
13
0
5
10
15
20
25
30
35
40
45
50
55
60
65
70
75
80
85
90
Throughput (gals/sq ft)

Figure 3: AquaDisk® Filter Run Turbidity Results: Storm Water Influent

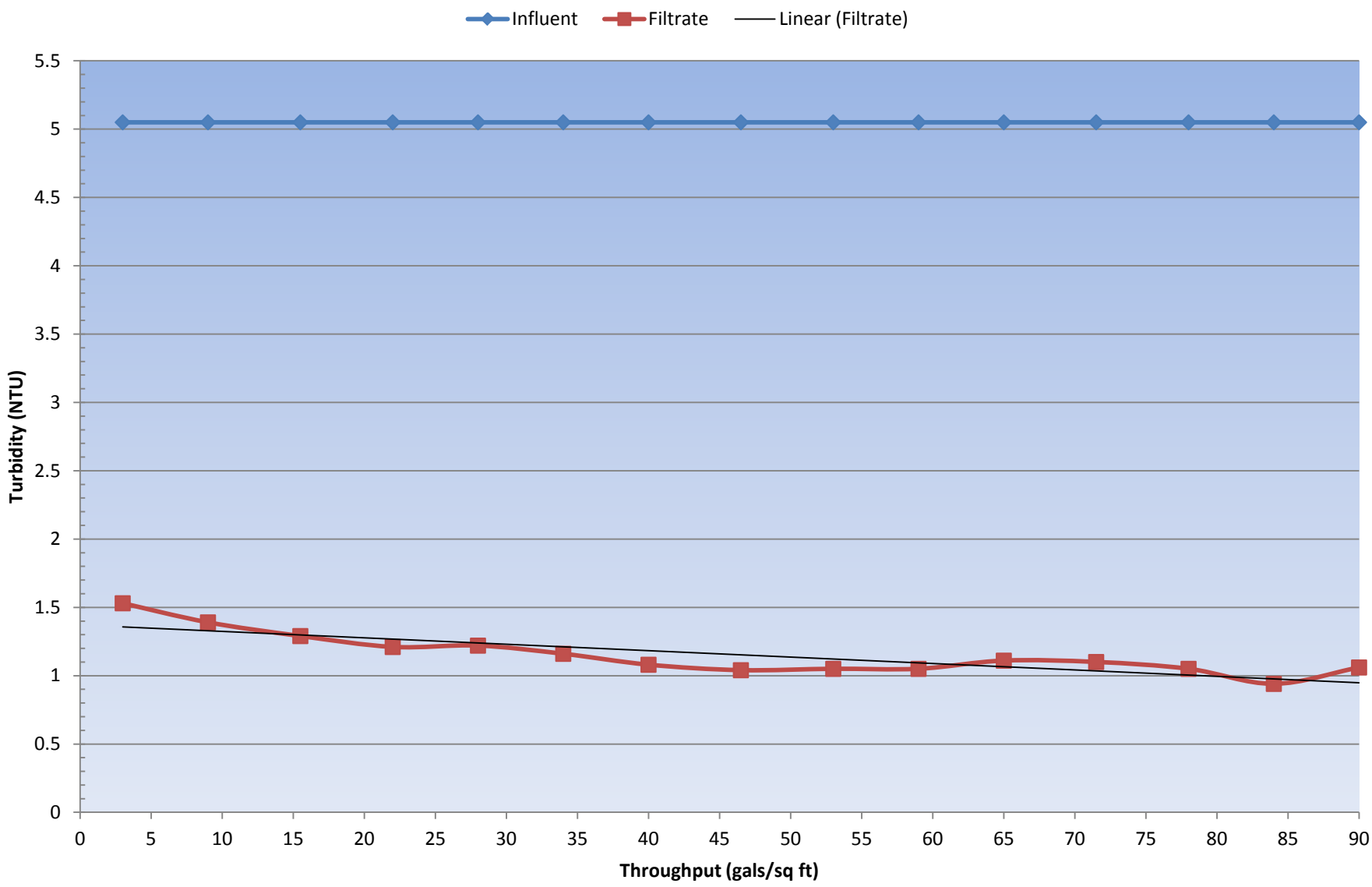

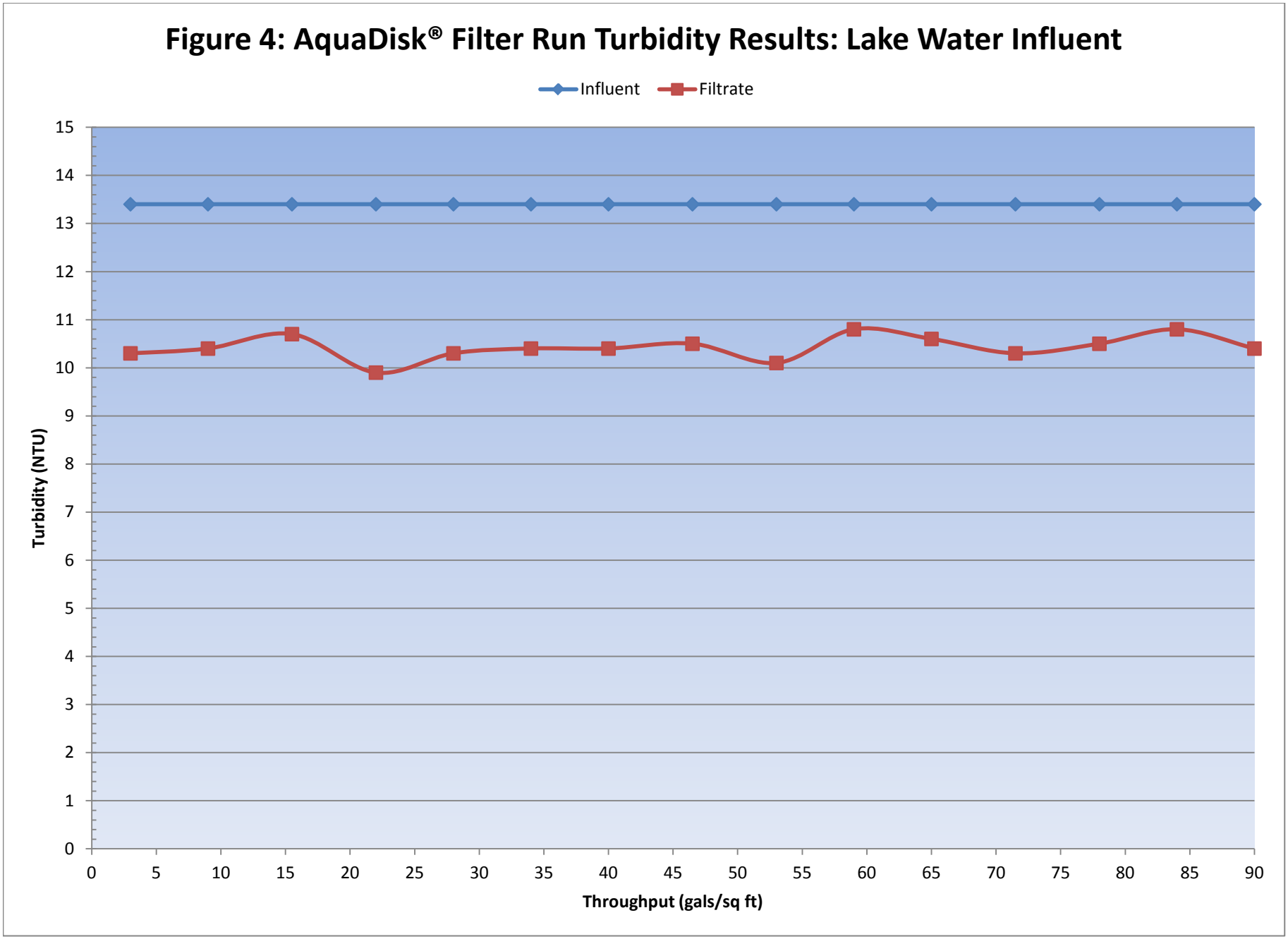
Figure 4: AquaDisk® Filter Run Turbidity Results: Lake Water Influent
Influent
Filtrate
Turbidity (NTU)
0
1
2
3
4
5
6
7
8
9
10
11
12
13
14
15
0
5
10
15
20
25
30
35
40
45
50
55
60
65
70
75
80
85
90
Throughput (gals/sq ft)

Figure 5: AquaDisk® Filter Run Particle Population Distribution Results: Storm and Lake Waters

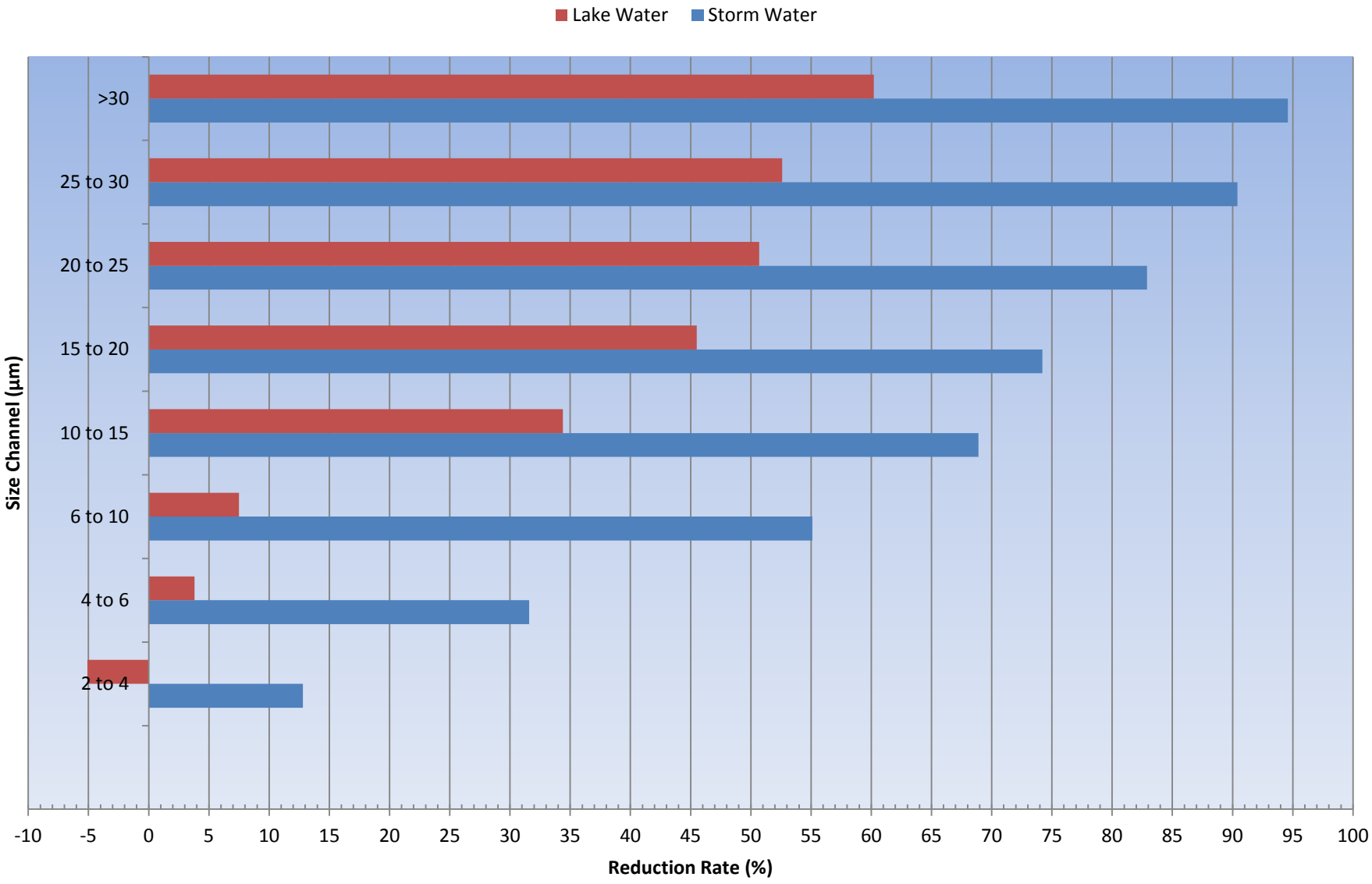

Appendix D

Water Quality Testing Laboratory Reports

1. Algae Enumeration and Identification

eurofins | Eaton Analytical

750 Royal Oaks Drive, Suite 100
Monrovia, California 91016-3629
Tel: (626) 386-1100
Fax: (626) 386-1101
1 800 566 LABS (1 800 566 5227)

NELAP ACCREDITED TNI LABORATORY
ORELAP 4034

ilac-MRA

ACLASS ACCREDITED TESTING
AT-1807

Laboratory Report

for

Tetra Tech, Inc.
201 East Pine Street
Suite 1000
Orlando, FL 32801
Attention: Rasesh Shah, PE
Fax: 407-839-3790

Date of Issue
06/09/2015
Vanessa Berry
EUROFINS EATON ANALYTICAL

ZIA8: Vanessa Berry

Project Manager

Report: 535530
Project: ALGAL_ID
Group: Algal ID and Enumeration

* Accredited in accordance with TNI 2009 and ISO/IEC 17025:2005.
* Laboratory certifies that the test results meet all **TNI 2009 and ISO/IEC 17025:2005** requirements unless noted under the individual analysis.
* Following the cover page are State Certification List, ISO 17025 Accredited Method List, Acknowledgement of Samples Received, Comments, Hits Report, Data Report, QC Summary, QC Report and Regulatory Forms, as applicable.
* Test results relate only to the sample(s) tested.

eurofins | Eaton Analytical

STATE CERTIFICATION LIST

State	Certification Number	State	Certification Number
Alabama	41060	**Mississippi**	Certified
Alaska	CA00006	**Montana**	Cert 0035
Arizona	AZ0778	**Nebraska**	Certified
Arkansas	Certified	**Nevada**	CA00006-2015
California-Monrovia-ELAP	2813	**New Hampshire ***	2959
California-Colton- ELAP	2812	**New Jersey ***	CA 008
California-Folsom- ELAP	2820	**New Mexico**	Certified
California-Fresno- ELAP	2966	**New York ***	11320
Colorado	Certified	**North Carolina**	06701
Connecticut	PH-0107	**North Dakota**	R-009
Delaware	CA 006	**Oregon (Primary AB) ***	**ORELAP 4034**
Florida *	E871024	**Pennsylvania ***	68-565
Georgia	947	**Rhode Island**	LAO00326
Guam	15-003r	**South Carolina**	87016
Hawaii	Certified	**South Dakota**	Certified
Idaho	Certified	**Tennessee**	TN02839
Illinois *	200033	**Texas ***	T104704230-14-7
Indiana	C-CA-01	**Utah ***	CA000062015-8
Kansas *	E-10268	**Vermont**	VT0114
Kentucky	90107	**Virginia ***	460260
Louisiana *	LA150018	**Washington**	C838
Maine	CA0006	**West Virginia**	9943 C
Maryland	224	**Wisconsin**	998316660
Commonwealth of Northern Marianas Is.	MP0004	**Wyoming**	8TMS-L
Massachusetts	M-CA006	**EPA Region 5**	Certified
Michigan	9906	**Los Angeles County Sanitation Districts**	10264

* NELAP/TNI Recognized Accreditation Bodies

The tests listed below are accredited and meet the requirements of ISO 17025 as verified by the ANSI-ASQ National Accreditation Board/ACLASS.
Refer to Certificate and scope of accreditation (AT 1807) found at: http://www.eatonanalytical.com

SPECIFIC TESTS	METHOD OR TECHNIQUE USED	Drinking Water	Food & Beverage	Waste Water
1,4-Dioxane	EPA 522	x	x	
2,3,7,8-TCDD	Modified EPA 1613B	x	x	
Acrylamide	In House Method	x	x	
Alkalinity	SM 2320B	x	x	x
Ammonia	EPA 350.1		x	x
Ammonia	SM 4500-NH3 H (18th)		x	x
Anions and DBPs by IC	EPA 300.0	x	x	x
Anions and DBPs by IC	EPA 300.1	x	x	
Asbestos	EPA 100.2	x		
Bicarbonate Alkalinity as HCO3	SM 2330B	x	x	x
BOD / CBOD	SM 5210B		x	x
Bromate	In House Method	x	x	
Carbamates	EPA 531.2	x	x	
Carbonate as CO3	SM 2330B	x	x	x
Carbonyls	EPA 556	x	x	
COD	EPA 410.4 / SM 5220D			x
Chloramines	SM 4500-CL G	x	x	x
Chlorinated Acids	EPA 515.4	x	x	
Chlorinated Acids	EPA 555	x	x	
Chlorine Dioxide	SM 4500-CLO2 D	x	x	
Chlorine -Total/Free/ Combined Residual	SM 4500-Cl G	x	x	x
Conductivity	EPA 120.1			x
Conductivity	SM 2510B	x	x	x
Corrosivity (Langelier Index)	SM 2330B	x	x	
Cyanide, Amenable	SM 4500-CN G	x		x
Cyanide, Free	SM 4500CN F	x	x	x
Cyanide, Total	EPA 335.4	x	x	x
Cyanogen Chloride (screen)	In House Method	x	x	
Diquat and Paraquat	EPA 549.2	x	x	
DBP/HAA	SM 6251B	x	x	
Dissolved Oxygen	SM 4500-O G		x	x
E. Coli	(MTF/EC+MUG)	x		
E. Coli	CFR 141.21(f)(6)(i)		x	x
E. Coli	SM 9223			x
E. Coli (Enumeration)	SM 9221B.1/ SM 9221F	x	x	
E. Coli (Enumeration)	SM 9223B	x	x	
EDB/DCBP	EPA 504.1	x		
EDB/DBCP and DBP	EPA 551.1	x	x	
EDTA and NTA	In House Method	x	x	
Endothall	EPA 548.1	x	x	
Enterococci	SM 9230B	x		x
Fecal Coliform	SM 9221 E (MTF/EC)	x		
Fecal Coliform	SM 9221C, E (MTF/EC)			x
Fecal Coliform (Enumeration)	SM 9221E (MTF/EC)	x	x	
Fecal Coliform with Chlorine Present	SM 9221E			x
Fecal Streptococci	SM 9230B	x		x
Fluoride	SM 4500-F C	x	x	x
Glyphosate	EPA 547	x	x	
Gross Alpha/Beta	EPA 900.0	x	x	x
HAAs/ Dalapon	EPA 552.3	x	x	
Hardness	SM 2340B	x	x	x
Heterotrophic Bacteria	In House Method	x	x	
Heterotrophic Bacteria	SM 9215 B	x	x	
Hexavalent Chromium	EPA 218.6	x	x	x
Hexavalent Chromium	EPA 218.7	x	x	
Hexavalent Chromium	SM 3500-Cr B or C (20th)			x

SPECIFIC TESTS	METHOD OR TECHNIQUE USED	Drinking Water	Food & Beverage	Waste Water
Hormones	EPA 539	x	x	
Hydroxide as OH Calc.	SM 2330B	x	x	
Kjeldahl Nitrogen	EPA 351.2			x
Mercury	EPA 245.1	x	x	x
Metals	EPA 200.7 / 200.8	x	x	x
Microcystin LR	ELISA	x	x	
NDMA	EPA 521	x	x	
Nitrate/Nitrite Nitrogen	EPA 353.2	x	x	x
OCL, Pesticides/PCB	EPA 505	x	x	
Ortho Phosphate	EPA 365.1	x	x	
Ortho Phosphate and Total Phosphorous	EPA 365.1/SM 4500-P E			x
Ortho Phosphorous	SM 4500P E	x	x	
Oxyhalides Disinfection Byproducts	EPA 317.0	x	x	
Perchlorate	EPA 331.0	x	x	
Perchlorate	EPA 314.0	x	x	
Perfluorinated Alkyl Acids	EPA 537	x	x	
pH	EPA 150.1	x		
pH	SM 4500-H+B	x	x	x
Phenylurea Pesticides/ Herbicides	In House Method	x	x	
Pseudomonas	IDEXX Pseudalert	x	x	
Radium-226	RA-226 GA	x	x	
Radium-228	RA-228 GA	x	x	
Radon-222	SM 7500RN	x	x	
Residue, Filterable	SM 2540C	x	x	x
Residue, Non-filterable	SM 2540D			x
Residue, Total	SM 2540B		x	x
Residue, Volatile	EPA 160.4			x
Semi-VOC	EPA 525.2	x	x	
Semi-VOC	EPA 625	x	x	x
Silica	SM 4500-Si D	x	x	x
Silica	SM 4500-SiO2 C	x		x
Sulfide	SM 4500-$S^{=}$ D			x
Sulfite	SM 4500-SO^3B	x	x	x
Surfactants	SM 5540C	x	x	x
Taste and Odor Analytes	SM 6040E	x	x	
Total Coliform	SM 9221 A, B	x	x	
Total Coliform (Enumeration)	SM 9221 A, B, C	x	x	
Total Coliform / E. coli	Colisure	x	x	
Total Coliform	SM 9221B			x
Total Coliform with Chlorine Present	SM 9221B			x
Total Coliform / E.coli	SM 9223	x	x	
TOC	SM 5310C		x	x
TOC/DOC	SM 5310C	x	x	
TOX	SM 5320B			x
Total Phenols	EPA 420.1			x
Total Phenols	EPA 420.4	x	x	x
Total Phosphorous	SM 4500 P F			x
Turbidity	EPA 180.1	x	x	x
Turbidity	SM 2130B	x		x
Uranium by ICP/MS	EPA 200.8	x	x	
UV 254	SM 5910B	x		
VOC	EPA 524.2/EPA 524.3	x	x	
VOC	EPA 624	x	x	x
VOC	EPA SW 846 8260	x	x	
VOC	In House Method	x	x	
Yeast and Mold	SM 9610	x	x	

eurofins | Eaton Analytical

Acknowledgement of Samples Received

Addr: **Tetra Tech, Inc.**
201 East Pine Street
Suite 1000
Orlando, FL 32801

Attn: Rasesh Shah, PE
Phone: 407-480-3926

Client ID: TETRATECH-ORLAN
Folder #: 535530
Project: ALGAL_ID
Sample Group: Algal ID and Enumeration

Project Manager: Vanessa Berry
Phone:

The following samples were received from you on **May 21, 2015** at **1124**. They have been scheduled for the tests listed below each sample. If this information is incorrect, please contact your service representative. Thank you for using Eurofins Eaton Analytical.

Sample #	Sample ID	Sample Date
201505210240	Lake Monroe	05/20/2015 1600

Algae Enumeration Algae Identification

Test Description

750 Royal Oaks Drive, Suite 100, Monrovia, CA 91016 Tel (626) 386-1100 Fax (626) 386-1101 http://www.EatonAnalytical.com

535530
~~518785~~

eurofins | Eaton Analytical

CHAIN OF CUSTODY RECORD

750 Royal Oaks Drive, Suite 100
Monrovia, CA 91016-3629

Phone: 626 386 1100
Fax: 626 386 1101

800 566 LABS (800 566 5227)

EUROFINS EATON ANALYTICAL USE ONLY:

LOGIN COMMENTS: 2-8-3=2.5 / 7/464A

SAMPLES CHECKED AGAINST COC BY: [illegible]

SAMPLES LOGGED IN BY: [illegible]

SAMPLES REC'D DAY OF COLLECTION? [✓] (check for yes)

SAMPLE TEMP RECEIVED AT:

[ ] Colton / No. California / Arizona _____ °C (Compliance: 4 ± 2 °C)

[✓] Monrovia 2.5 °C (Compliance: 4 ± 2 °C)

CONDITION OF BLUE ICE: Frozen _____ Partially Frozen _____ Thawed _____ Wet Ice _____ No Ice _____

METHOD OF SHIPMENT: Pick-Up / Walk-In / FedEx / UPS / DHL / Area Fast / Top Line / Other: _____

TO BE COMPLETED BY SAMPLER:

COMPANY/AGENCY NAME: Tetra Tech

PROJECT CODE: Lake Monroe

EEA CLIENT CODE:

COC ID:

SAMPLE GROUP:

COMPLIANCE SAMPLES [ ] (check for yes)
- Requires state forms [ ]

NON-COMPLIANCE SAMPLES [X] (check for yes)

REGULATION INVOLVED: _____

Type of samples (circle one): **ROUTINE** **SPECIAL** **CONFIRMATION** (eg. SDWA, Phase V, NPDES, FDA,...)

SEE ATTACHED BOTTLE ORDER FOR ANALYSES [ ] (check for yes), ***OR***

list ANALYSES REQUIRED (enter number of bottles sent for each test for each sample)

TAT requested: rush by adv notice only STD ___ 1 wk ___ 3 day ___ 2 day ___ 1 day ___

SAMPLE DATE	SAMPLE TIME	SAMPLE ID	CLIENT LAB ID	MATRIX *	FIELD DATA	FIELD DATA	Algae E/I													SAMPLER COMMENTS
5/20	1600	Lake Monroe	Lake Monroe	RSW			X												1	

*** MATRIX TYPES:** **RSW** = Raw Surface Water **CFW** = Chlor(am)inated Finished Water **SEAW** = Sea Water **BW** = Bottled Water **SO** = Soil **O** = Other - Please Identify
RGW = Raw Ground Water **FW** = Other Finished Water **WW** = Waste Water **SW** = Storm Water **SL** = Sludge

	SIGNATURE	PRINT NAME	COMPANY/TITLE	DATE	TIME
SAMPLED BY:	[signature]	Jennifer Roque	Tetra Tech	5/20/15	1700
RELINQUISHED BY:	[signature]	Jennifer Roque	Tetra Tech	5/20/15	1700
RECEIVED BY:	11:24 MAY 21 2015 Michael Uribe Eurofins Eaton Analytical				
RELINQUISHED BY:					
RECEIVED BY:					

QA FO 0029 (06/26/2013)

PAGE _____ OF _____

eurofins | Eaton Analytical
formerly MWH Laboratories

750 Royal Oaks Drive, Suite 100
Monrovia, California 91016-3629
(626) 386-1100 FAX (626) 386-1101

Kit Order for Tetra Tech, Inc.

Vanessa Berry is your Eurofins Eaton Analytical Project Manager

Note: Sampler Please return this paper with your samples

Kit #: 112056

Created By: ZIA8
Deliver By: 05/11/2015
STG: Bottle Orders
Ice Type: W
Pre Registerd

Client ID: TETRATECH-ORLAN
Project Code: ALGAL_ID Bottle Orders
Group Name: Algal ID and Enumeration
PO#/JOB#:

Ship Sample Kits to
Tetra Tech, Inc.
201 East Pine Street
Suite 1000
Orlando, FL 32801

Attn: Rasesh Shah, PE
Phone: 407-480-3926
Fax: 407-839-3790

Send Report to
Jennifer.Roque@tetratech.com

Attn: Jennifer Roque

Billing Address
201 East Pine St
Suite 1,000

Attn: Tetra Tech

# of Sample	Tests	Bottles - Qty for each sample, type & preservative if ai	UN DOT #
2	Algae Enumeration, Algae Identification	1 1L Wide Mouth Poly sterilized no preservative	

Comments

MUST BE DELIVERED on 5-11

Code	Status	Date Shipped	Via	Tracking #	# of Coolers	Prepared By

750 Royal Oaks Drive, Suite 100
Monrovia, California 91016-3629
Tel: (626) 386-1100
Fax: (626) 386-1101
1 800 566 LABS (1 800 566 5227)

Laboratory Comments
Report: 535530

Tetra Tech, Inc.
Rasesh Shah, PE
201 East Pine Street
Suite 1000
Orlando, FL 32801

The Comments Report may be blank if there are no comments for this report.

eurofins | Eaton Analytical

750 Royal Oaks Drive, Suite 100
Monrovia, California 91016-3629
Tel: (626) 386-1100
Fax: (626) 386-1101
1 800 566 LABS (1 800 566 5227)

Laboratory Hits
Report: 535530

Tetra Tech, Inc.
Rasesh Shah, PE
201 East Pine Street
Suite 1000
Orlando, FL 32801

Samples Received on:
05/21/2015 1124

Analyzed	Analyte	Sample ID	Result	Federal MCL	Units	MRL
	201505210240	**Lake Monroe**				
06/08/2015 10:02	Algae Enumeration		2600		#/ml	1
06/08/2015 10:02	Algae Identification		See Attached		Not Appl.	

SUMMARY OF POSITIVE DATA ONLY

eurofins | Eaton Analytical

750 Royal Oaks Drive, Suite 100
Monrovia, California 91016-3629
Tel: (626) 386-1100
Fax: (626) 386-1101
1 800 566 LABS (1 800 566 5227)

Laboratory Data
Report: 535530

Tetra Tech, Inc.
Rasesh Shah, PE
201 East Pine Street
Suite 1000
Orlando, FL 32801

Samples Received on:
05/21/2015 1124

Prepared	Analyzed	QC Ref #	Method	Analyte	Result	Units	MRL	Dilution
Lake Monroe (201505210240)						**Sampled on 05/20/2015 1600**		
		SM 10900 - Algae Identification						
	06/08/2015 10:02	843194	(SM 10900)	Algae Identification	See Attached	Not Appl.		1
		SM 10200F - Algae Enumeration						
	06/08/2015 10:02	843193	(SM 10200F)	Algae Enumeration	2600	#/ml	1	1

Rounding on totals after summation.
(c) - indicates calculated results

750 Royal Oaks Drive, Suite 100
Monrovia, California 91016-3629
Tel: (626) 386-1100
Fax: (626) 386-1101
1 800 566 LABS (1 800 566 5227)

Tetra Tech, Inc.

QC Ref # 843193 - Algae Enumeration **Analysis Date: 06/08/2015**

201505210240 Lake Monroe Analyzed by: LHD

QC Ref # 843194 - Algae Identification **Analysis Date: 06/08/2015**

201505210240 Lake Monroe Analyzed by: LHD

750 Royal Oaks Drive, Suite 100
Monrovia, California 91016-3629
Tel: (626) 386-1100
Fax: (626) 386-1101
1 800 566 LABS (1 800 566 5227)

Laboratory QC
Report: 535530

Tetra Tech, Inc.

QC Type	Analyte	Native	Spiked	Recovered	Units	Yield (%)	Limits (%)	RPDLimit (%)	RPD%

QC Ref# - by **Analysis Date:**

Spike recovery is already corrected for native results.
Spikes which exceed Limits and Method Blanks with positive results are highlighted by Underlining.
Criteria for MS and Dup are advisory only, batch control is based on LCS. Criteria for duplicates are advisory only, unless otherwise specified in the method.
RPD not calculated for LCS2 when different a concentration than LCS1 is used.
RPD not calculated for Duplicates when the result is not five times the MRL (Minimum Reporting Level).
(S) - Indicates surrogate compound.
(I) - Indicates internal standard compound.

ALGAE ANALYSIS by FLOW CYTOMETRY

Flow cytometry analysis of algae is an advanced method
for morphological identification and quick quantitative detection of individual particles in a sample.

Client	TETRATECH-ORLAN	Algal ID	**Prep Date/Time/Analyst:**	05/25/15 1559 LHD
Folder #	535530		**Analyzed Date/Time/Analyst:**	06/08/15 1002 LHD
Sample #	201505210240			
Sample ID	Lake Monroe			

Picture #	Algae Genus & Significance (3)		Count/ml	% Total Count	Biovolume (µm³)	% Total Biovolume
2274;4090	*Oscillatoria*	*TO,FC,PT*	471	17.5	3.44×10^{7}	52
561;3809	*Cylindrospermopsis*	*TO,PT*	1810	68	1.68×10^{7}	25.5
568;1820	*Anabaena*	*TO,FC,PT*	232	8.5	1.23×10^{7}	19
3244	*Synedra*	*TO,FC*	49	2	1.13×10^{6}	1.5
3939	*Closteriopsis*	*TO,FC*	6	<1	5.51×10^{5}	<1
1297	*Nitzschia*	*FC*	18	<1	2.11×10^{5}	<1
	Trachelomonas	*FC*	24	1	1.02×10^{5}	<1
1792	*Scenedesmus*	*TO*	24	1	5.83×10^{4}	<1
692	*Stephanodiscus*	*TO,FC*	12	<1	4.71×10^{4}	<1
371	*Merismopedia*		6	<1	1.80×10^{4}	<1
909	*Tetraedron*		6	<1	7.18×10^{3}	<1

Sample Volume Analyzed (1)	1 ml
Detection Limit	1

Total Algae Count/ml	2,658	which includes	*Total Blue-Green Algae Count/ml*	*2,519*

Total Phytoplankton Biovolume (µm³/ml)	6.57×10^{7}	of which	*Blue Green Algae Biovolume comprises*	*96.5%*

(1) Sample results extrapolated to give results/ml of sample
(2) % Algae Biovolume that occupied per unit volume of sample

ALGAE ANALYSIS by FLOW CYTOMETRY

% Phytoplankton Biovolume [2] 6.57×10^{-3}

(3)TO: Taste & Odor
FC: Filter Clogging
PT: Potential Toxin

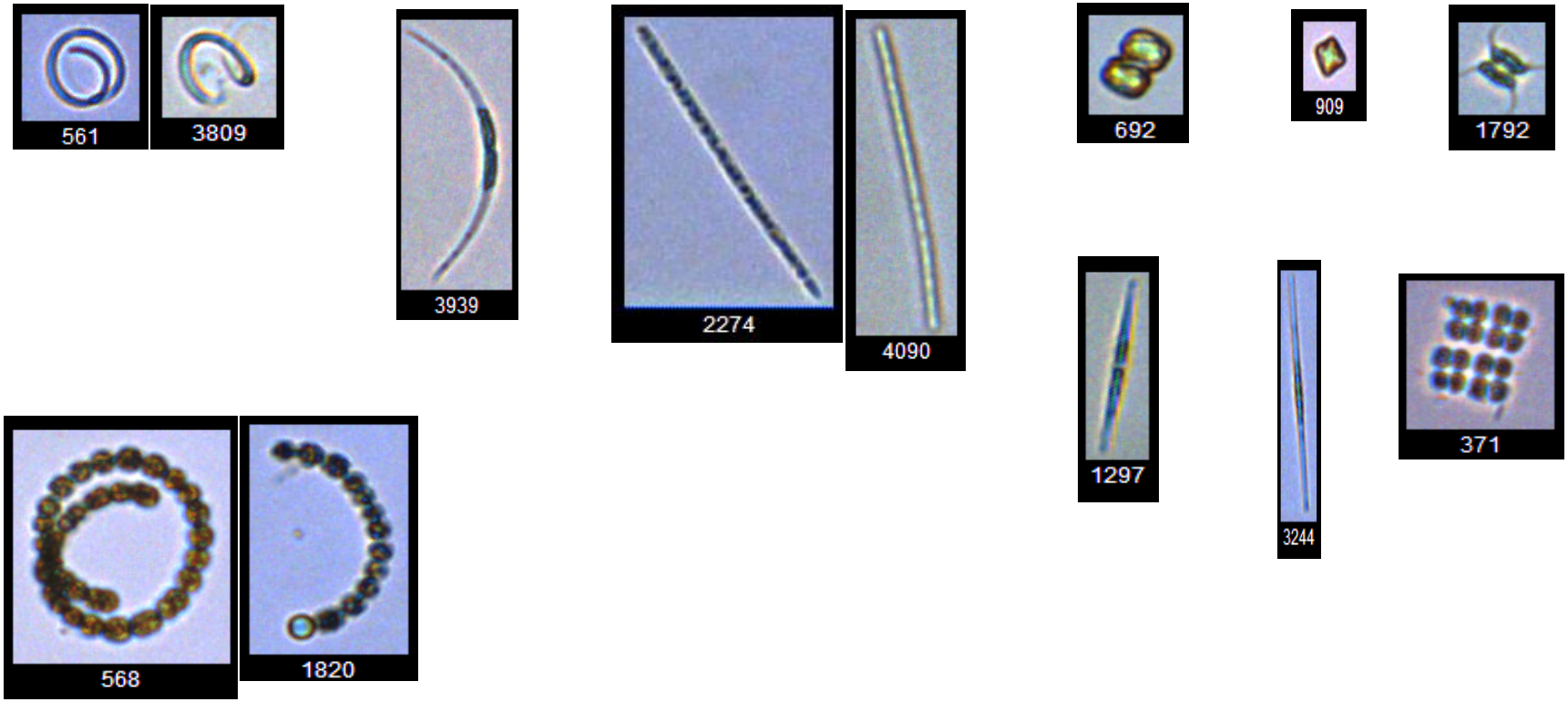

(1) Sample results extrapolated to give results/ml of sample
(2) % Algae Biovolume that occupied per unit volume of sample

2. Lake Monroe Water Analytical Testing Report (04/23/2015)

TestAmerica

THE LEADER IN ENVIRONMENTAL TESTING

ANALYTICAL REPORT

TestAmerica Laboratories, Inc.
TestAmerica Tampa
6712 Benjamin Road
Suite 100
Tampa, FL 33634
Tel: (813)885-7427

TestAmerica Job ID: 660-66417-1
Client Project/Site: Lake Monroe

For:
Tetra Tech, Inc.
201 E. Pine St., Ste. 1000
Orlando, Florida 32801

Attn: Rasesh Shah

Authorized for release by:
4/23/2015 2:47:37 PM

Nancy Robertson, Project Manager II
(813)885-7427
nancy.robertson@testamericainc.com

LINKS

Review your project results through TotalAccess

Have a Question? Ask The Expert

Visit us at: www.testamericainc.com

The test results in this report meet all 2003 NELAC and 2009 TNI requirements for accredited parameters, exceptions are noted in this report. This report may not be reproduced except in full, and with written approval from the laboratory. For questions please contact the Project Manager at the e-mail address or telephone number listed on this page.

This report has been electronically signed and authorized by the signatory. Electronic signature is intended to be the legally binding equivalent of a traditionally handwritten signature.

Results relate only to the items tested and the sample(s) as received by the laboratory.

Table of Contents

Cover Page 1
Table of Contents 2
Sample Summary 3
Case Narrative 4
Definitions/Glossary 5
Client Sample Results 6
QC Sample Results 7
QC Association Summary 17
Lab Chronicle 21
Method Summary 22
Certification Summary 23
Subcontract Data 25
Chain of Custody 33
Receipt Checklists 35

Sample Summary

Client: Tetra Tech, Inc.
Project/Site: Lake Monroe

TestAmerica Job ID: 660-66417-1

Lab Sample ID	Client Sample ID	Matrix	Collected	Received
660-66417-1	Lake Monroe Boat Ramp	Water	04/15/15 11:00	04/16/15 11:21

Case Narrative

Client: Tetra Tech, Inc.
Project/Site: Lake Monroe

TestAmerica Job ID: 660-66417-1

Job ID: 660-66417-1

Laboratory: TestAmerica Tampa

Narrative

Job Narrative
660-66417-1

Comments
No additional comments.

Receipt
The sample was received on 4/16/2015 11:21 AM; the sample arrived in good condition, properly preserved and, where required, on ice.
The temperature of the cooler at receipt was 0.9º C.

HPLC/IC
No analytical or quality issues were noted, other than those described in the Definitions/Glossary page.

Metals
No analytical or quality issues were noted, other than those described in the Definitions/Glossary page.

General Chemistry
Method SM 4500 H+ B: The method requested is normally performed in the field, and performing this method in the laboratory may produce biased results.

No additional analytical or quality issues were noted, other than those described above or in the Definitions/Glossary page.

Subcontract non-Sister
The Coliform and the Chlorophyll-a analysis was performed at ENCO Laboratory. Their report is attached in this report.

Qualifiers

HPLC/IC

Qualifier	Qualifier Description
U	Indicates that the compound was analyzed for but not detected.

Metals

Qualifier	Qualifier Description
U	Indicates that the compound was analyzed for but not detected.

General Chemistry

Qualifier	Qualifier Description
J3	Estimated value; value may not be accurate. Spike recovery or RPD outside of criteria.
U	Indicates that the compound was analyzed for but not detected.
Q	Sample held beyond the accepted holding time.
I	The reported value is between the laboratory method detection limit and the laboratory practical quantitation limit.

Glossary

Abbreviation	These commonly used abbreviations may or may not be present in this report.
¤	Listed under the "D" column to designate that the result is reported on a dry weight basis
%R	Percent Recovery
CFL	Contains Free Liquid
CNF	Contains no Free Liquid
DER	Duplicate error ratio (normalized absolute difference)
Dil Fac	Dilution Factor
DL, RA, RE, IN	Indicates a Dilution, Re-analysis, Re-extraction, or additional Initial metals/anion analysis of the sample
DLC	Decision level concentration
MDA	Minimum detectable activity
EDL	Estimated Detection Limit
MDC	Minimum detectable concentration
MDL	Method Detection Limit
ML	Minimum Level (Dioxin)
NC	Not Calculated
ND	Not detected at the reporting limit (or MDL or EDL if shown)
PQL	Practical Quantitation Limit
QC	Quality Control
RER	Relative error ratio
RL	Reporting Limit or Requested Limit (Radiochemistry)
RPD	Relative Percent Difference, a measure of the relative difference between two points
TEF	Toxicity Equivalent Factor (Dioxin)
TEQ	Toxicity Equivalent Quotient (Dioxin)

Client Sample Results

Client: Tetra Tech, Inc.
Project/Site: Lake Monroe

TestAmerica Job ID: 660-66417-1

Client Sample ID: Lake Monroe Boat Ramp

Lab Sample ID: 660-66417-1

Date Collected: 04/15/15 11:00
Matrix: Water
Date Received: 04/16/15 11:21

Method: 300.0 - Anions, Ion Chromatography

Analyte	Result	Qualifier	PQL	MDL	Unit	D	Prepared	Analyzed	Dil Fac
Sulfate	**39**		10	4.0	mg/L			04/17/15 22:09	10
Chloride	**230**		5.0	2.0	mg/L			04/17/15 22:09	10

Method: 6010B - Metals (ICP) - Total Recoverable

Analyte	Result	Qualifier	PQL	MDL	Unit	D	Prepared	Analyzed	Dil Fac
Cadmium	0.0010	U	0.0040	0.0010	mg/L		04/17/15 07:39	04/17/15 13:16	1
Iron	**0.23**		0.20	0.050	mg/L		04/17/15 07:39	04/17/15 13:16	1
Manganese	**0.0093**		0.0040	0.0010	mg/L		04/17/15 07:39	04/17/15 13:16	1
Nickel	0.0020	U	0.0080	0.0020	mg/L		04/17/15 07:39	04/17/15 13:16	1
Zinc	0.0050	U	0.020	0.0050	mg/L		04/17/15 07:39	04/17/15 13:16	1

Method: 7470A - Mercury (CVAA)

Analyte	Result	Qualifier	PQL	MDL	Unit	D	Prepared	Analyzed	Dil Fac
Mercury	0.072	U	0.20	0.072	ug/L		04/20/15 10:00	04/20/15 14:27	1

General Chemistry

Analyte	Result	Qualifier	PQL	MDL	Unit	D	Prepared	Analyzed	Dil Fac
Ammonia as N	0.10	U	0.25	0.10	mg/L			04/22/15 08:25	1
Nitrogen, Kjeldahl	**1.3**		0.20	0.10	mg/L		04/20/15 07:46	04/21/15 11:21	1
Nitrate Nitrite as N	0.010	U	0.050	0.010	mg/L			04/17/15 14:56	1
Phosphorus, Total	**0.10**		0.10	0.041	mg/L		04/20/15 07:46	04/21/15 11:21	1
Total Sulfide	1.0	U	1.0	1.0	mg/L			04/17/15 13:03	1
Color	**120**		10	10	PCU			04/17/15 05:45	2
pH at time of analysis	**8.0**		1.0	1.0	SU			04/17/15 05:45	2
Turbidity	**3.3**		0.50	0.50	NTU			04/16/15 11:55	1
Alkalinity as CaCO3	**70**		1.0	1.0	mg/L			04/17/15 05:25	1
Total Dissolved Solids	**540**		5.0	5.0	mg/L			04/17/15 14:35	1
Total Suspended Solids	**4.6**		1.6	1.6	mg/L			04/17/15 09:45	1
pH	**6.98**	**Q**			SU			04/18/15 12:15	1
Total Organic Carbon	**18**		1.0	0.50	mg/L			04/21/15 12:25	1
Nitrogen, Total	**1.3**		0.25	0.25	mg/L			04/21/15 14:28	1

General Chemistry - Dissolved

Analyte	Result	Qualifier	PQL	MDL	Unit	D	Prepared	Analyzed	Dil Fac
Orthophosphate	**0.010**		0.010	0.0050	mg/L			04/16/15 13:30	1

QC Sample Results

Client: Tetra Tech, Inc.
Project/Site: Lake Monroe

TestAmerica Job ID: 660-66417-1

Method: 300.0 - Anions, Ion Chromatography

Lab Sample ID: MB 680-379187/35 — **Client Sample ID: Method Blank**
Matrix: Water — **Prep Type: Total/NA**
Analysis Batch: 379187

Analyte	MB Result	MB Qualifier	PQL	MDL	Unit	D	Prepared	Analyzed	Dil Fac
Sulfate	0.40	U	1.0	0.40	mg/L			04/17/15 19:04	1
Chloride	0.20	U	0.50	0.20	mg/L			04/17/15 19:04	1

Lab Sample ID: LCS 680-379187/36 — **Client Sample ID: Lab Control Sample**
Matrix: Water — **Prep Type: Total/NA**
Analysis Batch: 379187

Analyte	Spike Added	LCS Result	LCS Qualifier	Unit	D	%Rec	%Rec. Limits
Sulfate	10.0	10.2		mg/L		102	90 - 110
Chloride	10.0	10.1		mg/L		101	90 - 110

Lab Sample ID: LCSD 680-379187/37 — **Client Sample ID: Lab Control Sample Dup**
Matrix: Water — **Prep Type: Total/NA**
Analysis Batch: 379187

Analyte	Spike Added	LCSD Result	LCSD Qualifier	Unit	D	%Rec	%Rec. Limits	RPD	RPD Limit
Sulfate	10.0	10.2		mg/L		102	90 - 110	0	30
Chloride	10.0	10.1		mg/L		101	90 - 110	0	30

Lab Sample ID: 640-50943-A-1 MS — **Client Sample ID: Matrix Spike**
Matrix: Water — **Prep Type: Total/NA**
Analysis Batch: 379187

Analyte	Sample Result	Sample Qualifier	Spike Added	MS Result	MS Qualifier	Unit	D	%Rec	%Rec. Limits
Sulfate	8.8		10.0	18.5		mg/L		98	80 - 120
Chloride	3.8		10.0	14.0		mg/L		102	80 - 120

Lab Sample ID: 640-50943-A-1 MSD — **Client Sample ID: Matrix Spike Duplicate**
Matrix: Water — **Prep Type: Total/NA**
Analysis Batch: 379187

Analyte	Sample Result	Sample Qualifier	Spike Added	MSD Result	MSD Qualifier	Unit	D	%Rec	%Rec. Limits	RPD	RPD Limit
Sulfate	8.8		10.0	18.7		mg/L		99	80 - 120	1	30
Chloride	3.8		10.0	14.1		mg/L		103	80 - 120	1	30

Method: 6010B - Metals (ICP)

Lab Sample ID: MB 660-157251/1-A — **Client Sample ID: Method Blank**
Matrix: Water — **Prep Type: Total Recoverable**
Analysis Batch: 157263 — **Prep Batch: 157251**

Analyte	MB Result	MB Qualifier	PQL	MDL	Unit	D	Prepared	Analyzed	Dil Fac
Cadmium	0.0010	U	0.0040	0.0010	mg/L		04/17/15 07:39	04/17/15 12:34	1
Iron	0.050	U	0.20	0.050	mg/L		04/17/15 07:39	04/17/15 12:34	1
Manganese	0.0010	U	0.0040	0.0010	mg/L		04/17/15 07:39	04/17/15 12:34	1
Nickel	0.0020	U	0.0080	0.0020	mg/L		04/17/15 07:39	04/17/15 12:34	1
Zinc	0.0050	U	0.020	0.0050	mg/L		04/17/15 07:39	04/17/15 12:34	1

Method: 6010B - Metals (ICP) (Continued)

Lab Sample ID: LCS 660-157251/2-A — **Client Sample ID: Lab Control Sample**
Matrix: Water — **Prep Type: Total Recoverable**
Analysis Batch: 157263 — **Prep Batch: 157251**

Analyte	Spike Added	LCS Result	LCS Qualifier	Unit	D	%Rec	%Rec. Limits
Cadmium	1.00	1.01		mg/L		101	80 - 120
Iron	1.00	1.02		mg/L		102	80 - 120
Manganese	1.00	1.04		mg/L		104	80 - 120
Nickel	1.00	1.04		mg/L		104	80 - 120
Zinc	1.00	1.06		mg/L		106	80 - 120

Lab Sample ID: 660-66416-C-5-B MS — **Client Sample ID: Matrix Spike**
Matrix: Water — **Prep Type: Total Recoverable**
Analysis Batch: 157263 — **Prep Batch: 157251**

Analyte	Sample Result	Sample Qualifier	Spike Added	MS Result	MS Qualifier	Unit	D	%Rec	%Rec. Limits
Cadmium	0.0010	U	1.00	1.03		mg/L		103	80 - 120
Iron	0.050	U	1.00	1.06		mg/L		106	80 - 120
Manganese	0.81		1.00	1.83		mg/L		103	80 - 120
Nickel	0.0020	U	1.00	1.04		mg/L		104	80 - 120
Zinc	0.0050	U	1.00	1.10		mg/L		110	80 - 120

Lab Sample ID: 660-66416-C-5-C MSD — **Client Sample ID: Matrix Spike Duplicate**
Matrix: Water — **Prep Type: Total Recoverable**
Analysis Batch: 157263 — **Prep Batch: 157251**

Analyte	Sample Result	Sample Qualifier	Spike Added	MSD Result	MSD Qualifier	Unit	D	%Rec	%Rec. Limits	RPD	RPD Limit
Cadmium	0.0010	U	1.00	1.04		mg/L		104	80 - 120	0	20
Iron	0.050	U	1.00	1.05		mg/L		105	80 - 120	1	20
Manganese	0.81		1.00	1.85		mg/L		104	80 - 120	1	20
Nickel	0.0020	U	1.00	1.04		mg/L		104	80 - 120	1	20
Zinc	0.0050	U	1.00	1.11		mg/L		111	80 - 120	1	20

Method: 7470A - Mercury (CVAA)

Lab Sample ID: MB 660-157304/13-A — **Client Sample ID: Method Blank**
Matrix: Water — **Prep Type: Total/NA**
Analysis Batch: 157319 — **Prep Batch: 157304**

Analyte	MB Result	MB Qualifier	PQL	MDL	Unit	D	Prepared	Analyzed	Dil Fac
Mercury	0.072	U	0.20	0.072	ug/L		04/20/15 10:00	04/20/15 14:10	1

Lab Sample ID: LCS 660-157304/14-A — **Client Sample ID: Lab Control Sample**
Matrix: Water — **Prep Type: Total/NA**
Analysis Batch: 157319 — **Prep Batch: 157304**

Analyte	Spike Added	LCS Result	LCS Qualifier	Unit	D	%Rec	%Rec. Limits
Mercury	1.40	1.30		ug/L		93	80 - 120

Method: 7470A - Mercury (CVAA) (Continued)

Lab Sample ID: 660-66448-D-1-B MS — **Client Sample ID: Matrix Spike**
Matrix: Water — **Prep Type: Total/NA**
Analysis Batch: 157319 — **Prep Batch: 157304**

Analyte	Sample Result	Sample Qualifier	Spike Added	MS Result	MS Qualifier	Unit	D	%Rec	%Rec. Limits		
Mercury	0.17	I	1.40	1.53		ug/L		97	80 - 120		

Lab Sample ID: 660-66448-D-1-C MSD — **Client Sample ID: Matrix Spike Duplicate**
Matrix: Water — **Prep Type: Total/NA**
Analysis Batch: 157319 — **Prep Batch: 157304**

Analyte	Sample Result	Sample Qualifier	Spike Added	MSD Result	MSD Qualifier	Unit	D	%Rec	%Rec. Limits	RPD	RPD Limit
Mercury	0.17	I	1.40	1.55		ug/L		99	80 - 120	2	20

Method: 350.1 - Nitrogen, Ammonia

Lab Sample ID: MB 680-379704/2 — **Client Sample ID: Method Blank**
Matrix: Water — **Prep Type: Total/NA**
Analysis Batch: 379704

Analyte	MB Result	MB Qualifier	PQL	MDL	Unit	D	Prepared	Analyzed	Dil Fac
Ammonia as N	0.10	U	0.25	0.10	mg/L			04/22/15 07:25	1

Lab Sample ID: LCS 680-379704/1 — **Client Sample ID: Lab Control Sample**
Matrix: Water — **Prep Type: Total/NA**
Analysis Batch: 379704

Analyte	Spike Added	LCS Result	LCS Qualifier	Unit	D	%Rec	%Rec. Limits
Ammonia as N	1.00	1.00		mg/L		100	90 - 110

Lab Sample ID: 660-66409-F-4 MS — **Client Sample ID: Matrix Spike**
Matrix: Water — **Prep Type: Total/NA**
Analysis Batch: 379704

Analyte	Sample Result	Sample Qualifier	Spike Added	MS Result	MS Qualifier	Unit	D	%Rec	%Rec. Limits		
Ammonia as N	0.13	I	1.00	1.17		mg/L		104	90 - 110		

Lab Sample ID: 660-66409-F-4 MSD — **Client Sample ID: Matrix Spike Duplicate**
Matrix: Water — **Prep Type: Total/NA**
Analysis Batch: 379704

Analyte	Sample Result	Sample Qualifier	Spike Added	MSD Result	MSD Qualifier	Unit	D	%Rec	%Rec. Limits	RPD	RPD Limit
Ammonia as N	0.322		1.00	1.17	J3	mg/L		85	90 - 110	0	30

Lab Sample ID: 660-66410-C-9 DU — **Client Sample ID: Duplicate**
Matrix: Water — **Prep Type: Total/NA**
Analysis Batch: 379704

Analyte	Sample Result	Sample Qualifier		DU Result	DU Qualifier	Unit	D			RPD	RPD Limit
Ammonia as N	0.10	U		0.10	U	mg/L				NC	30

Method: 351.2 - Nitrogen, Total Kjeldahl

Lab Sample ID: MB 680-379358/1-A — **Client Sample ID: Method Blank**
Matrix: Water — **Prep Type: Total/NA**
Analysis Batch: 379570 — **Prep Batch: 379358**

Analyte	MB Result	MB Qualifier	PQL	MDL	Unit	D	Prepared	Analyzed	Dil Fac
Nitrogen, Kjeldahl	0.10	U	0.20	0.10	mg/L		04/20/15 07:46	04/21/15 10:50	1

Lab Sample ID: LCS 680-379358/2-A — **Client Sample ID: Lab Control Sample**
Matrix: Water — **Prep Type: Total/NA**
Analysis Batch: 379570 — **Prep Batch: 379358**

Analyte	Spike Added	LCS Result	LCS Qualifier	Unit	D	%Rec	%Rec. Limits
Nitrogen, Kjeldahl	2.00	2.13		mg/L		107	75 - 125

Lab Sample ID: 680-111661-B-1-B MS — **Client Sample ID: Matrix Spike**
Matrix: Water — **Prep Type: Total/NA**
Analysis Batch: 379570 — **Prep Batch: 379358**

Analyte	Sample Result	Sample Qualifier	Spike Added	MS Result	MS Qualifier	Unit	D	%Rec	%Rec. Limits
Nitrogen, Kjeldahl	0.56		2.00	2.30		mg/L		87	75 - 125

Lab Sample ID: 680-111661-B-1-C MSD — **Client Sample ID: Matrix Spike Duplicate**
Matrix: Water — **Prep Type: Total/NA**
Analysis Batch: 379570 — **Prep Batch: 379358**

Analyte	Sample Result	Sample Qualifier	Spike Added	MSD Result	MSD Qualifier	Unit	D	%Rec	%Rec. Limits	RPD	RPD Limit
Nitrogen, Kjeldahl	0.56		2.00	2.41		mg/L		93	75 - 125	5	40

Lab Sample ID: 680-111661-B-2-B DU — **Client Sample ID: Duplicate**
Matrix: Water — **Prep Type: Total/NA**
Analysis Batch: 379570 — **Prep Batch: 379358**

Analyte	Sample Result	Sample Qualifier	DU Result	DU Qualifier	Unit	D	RPD	RPD Limit
Nitrogen, Kjeldahl	0.38		0.396		mg/L		4	40

Method: 353.2 - Nitrogen, Nitrate-Nitrite

Lab Sample ID: MB 680-379203/13 — **Client Sample ID: Method Blank**
Matrix: Water — **Prep Type: Total/NA**
Analysis Batch: 379203

Analyte	MB Result	MB Qualifier	PQL	MDL	Unit	D	Prepared	Analyzed	Dil Fac
Nitrate Nitrite as N	0.010	U	0.050	0.010	mg/L			04/17/15 14:36	1

Lab Sample ID: LCS 680-379203/15 — **Client Sample ID: Lab Control Sample**
Matrix: Water — **Prep Type: Total/NA**
Analysis Batch: 379203

Analyte	Spike Added	LCS Result	LCS Qualifier	Unit	D	%Rec	%Rec. Limits
Nitrate Nitrite as N	1.00	1.04		mg/L		104	90 - 110

Method: 353.2 - Nitrogen, Nitrate-Nitrite (Continued)

Lab Sample ID: 680-111670-A-1 MS — **Client Sample ID: Matrix Spike**
Matrix: Water — **Prep Type: Total/NA**
Analysis Batch: 379203

Analyte	Sample Result	Sample Qualifier	Spike Added	MS Result	MS Qualifier	Unit	D	%Rec	%Rec. Limits		
Nitrate Nitrite as N	0.87		1.00	1.79		mg/L		91	90 - 110		

Lab Sample ID: 680-111670-A-1 MSD — **Client Sample ID: Matrix Spike Duplicate**
Matrix: Water — **Prep Type: Total/NA**
Analysis Batch: 379203

Analyte	Sample Result	Sample Qualifier	Spike Added	MSD Result	MSD Qualifier	Unit	D	%Rec	%Rec. Limits	RPD	RPD Limit
Nitrate Nitrite as N	0.87		1.00	1.81		mg/L		94	90 - 110	1	10

Lab Sample ID: 680-111670-A-2 DU — **Client Sample ID: Duplicate**
Matrix: Water — **Prep Type: Total/NA**
Analysis Batch: 379203

Analyte	Sample Result	Sample Qualifier		DU Result	DU Qualifier	Unit	D			RPD	RPD Limit
Nitrate Nitrite as N	0.010	U		0.010	U	mg/L					

Method: 365.4 - Phosphorus, Total

Lab Sample ID: MB 680-379358/1-A — **Client Sample ID: Method Blank**
Matrix: Water — **Prep Type: Total/NA**
Analysis Batch: 379569 — **Prep Batch: 379358**

Analyte	MB Result	MB Qualifier	PQL	MDL	Unit	D	Prepared	Analyzed	Dil Fac
Phosphorus, Total	0.041	U	0.10	0.041	mg/L		04/20/15 07:46	04/21/15 10:50	1

Lab Sample ID: LCS 680-379358/2-A — **Client Sample ID: Lab Control Sample**
Matrix: Water — **Prep Type: Total/NA**
Analysis Batch: 379569 — **Prep Batch: 379358**

Analyte			Spike Added	LCS Result	LCS Qualifier	Unit	D	%Rec	%Rec. Limits		
Phosphorus, Total			2.00	2.00		mg/L		100	60 - 140		

Lab Sample ID: 680-111661-B-1-B MS — **Client Sample ID: Matrix Spike**
Matrix: Water — **Prep Type: Total/NA**
Analysis Batch: 379569 — **Prep Batch: 379358**

Analyte	Sample Result	Sample Qualifier	Spike Added	MS Result	MS Qualifier	Unit	D	%Rec	%Rec. Limits		
Phosphorus, Total	0.099	I	2.00	2.22		mg/L		106	60 - 140		

Lab Sample ID: 680-111661-B-1-C MSD — **Client Sample ID: Matrix Spike Duplicate**
Matrix: Water — **Prep Type: Total/NA**
Analysis Batch: 379569 — **Prep Batch: 379358**

Analyte	Sample Result	Sample Qualifier	Spike Added	MSD Result	MSD Qualifier	Unit	D	%Rec	%Rec. Limits	RPD	RPD Limit
Phosphorus, Total	0.099	I	2.00	2.32		mg/L		111	60 - 140	4	40

Method: 365.4 - Phosphorus, Total (Continued)

Lab Sample ID: 680-111661-B-2-B DU — **Client Sample ID: Duplicate**
Matrix: Water — **Prep Type: Total/NA**
Analysis Batch: 379569 — **Prep Batch: 379358**

Analyte	Sample Result	Sample Qualifier		DU Result	DU Qualifier	Unit	D			RPD	RPD Limit
Phosphorus, Total	0.067	I		0.0666	I	mg/L				0.6	40

Method: 4500 S2 F-2011 - Sulfide, Total

Lab Sample ID: MB 680-379159/1 — **Client Sample ID: Method Blank**
Matrix: Water — **Prep Type: Total/NA**
Analysis Batch: 379159

Analyte	MB Result	MB Qualifier	PQL	MDL	Unit	D	Prepared	Analyzed	Dil Fac
Total Sulfide	1.0	U	1.0	1.0	mg/L			04/17/15 13:03	1

Lab Sample ID: LCS 680-379159/2 — **Client Sample ID: Lab Control Sample**
Matrix: Water — **Prep Type: Total/NA**
Analysis Batch: 379159

Analyte			Spike Added	LCS Result	LCS Qualifier	Unit	D	%Rec	%Rec. Limits		
Total Sulfide			10.0	11.6		mg/L		116	75 - 125		

Lab Sample ID: LCSD 680-379159/3 — **Client Sample ID: Lab Control Sample Dup**
Matrix: Water — **Prep Type: Total/NA**
Analysis Batch: 379159

Analyte			Spike Added	LCSD Result	LCSD Qualifier	Unit	D	%Rec	%Rec. Limits	RPD	RPD Limit
Total Sulfide			10.0	11.2		mg/L		112	75 - 125	4	30

Lab Sample ID: 660-66356-E-5 DU — **Client Sample ID: Duplicate**
Matrix: Water — **Prep Type: Total/NA**
Analysis Batch: 379159

Analyte	Sample Result	Sample Qualifier		DU Result	DU Qualifier	Unit	D			RPD	RPD Limit
Total Sulfide	1.5			1.38		mg/L				8	30

Method: SM 2120B - Color, Colorimetric

Lab Sample ID: MB 660-157248/4 — **Client Sample ID: Method Blank**
Matrix: Water — **Prep Type: Total/NA**
Analysis Batch: 157248

Analyte	MB Result	MB Qualifier	PQL	MDL	Unit	D	Prepared	Analyzed	Dil Fac
Color	5.0	U	5.0	5.0	PCU			04/17/15 05:45	1
pH at time of analysis	6.57		1.0	1.0	SU			04/17/15 05:45	1

Lab Sample ID: LCS 660-157248/5 — **Client Sample ID: Lab Control Sample**
Matrix: Water — **Prep Type: Total/NA**
Analysis Batch: 157248

Analyte			Spike Added	LCS Result	LCS Qualifier	Unit	D	%Rec	%Rec. Limits		
Color			30.0	30.0		PCU		100	90 - 110		

Method: SM 2120B - Color, Colorimetric (Continued)

Lab Sample ID: 660-66410-B-1 DU — **Client Sample ID: Duplicate**
Matrix: Water — **Prep Type: Total/NA**
Analysis Batch: 157248

Analyte	Sample Result	Sample Qualifier		DU Result	DU Qualifier	Unit	D			RPD	RPD Limit
Color	70			70.0		PCU				0	20
pH at time of analysis	7.5			7.51		SU				0.3	

Method: SM 2130B - Turbidity

Lab Sample ID: MB 660-157231/2 — **Client Sample ID: Method Blank**
Matrix: Water — **Prep Type: Total/NA**
Analysis Batch: 157231

Analyte	MB Result	MB Qualifier	PQL	MDL	Unit	D	Prepared	Analyzed	Dil Fac
Turbidity	0.50	U	0.50	0.50	NTU			04/16/15 08:40	1

Lab Sample ID: LCS 660-157231/3 — **Client Sample ID: Lab Control Sample**
Matrix: Water — **Prep Type: Total/NA**
Analysis Batch: 157231

Analyte			Spike Added	LCS Result	LCS Qualifier	Unit	D	%Rec	%Rec. Limits		
Turbidity			40.0	39.2		NTU		98	90 - 110		

Lab Sample ID: LCSD 660-157231/6 — **Client Sample ID: Lab Control Sample Dup**
Matrix: Water — **Prep Type: Total/NA**
Analysis Batch: 157231

Analyte			Spike Added	LCSD Result	LCSD Qualifier	Unit	D	%Rec	%Rec. Limits	RPD	RPD Limit
Turbidity			40.0	40.0		NTU		100	90 - 110	2	20

Lab Sample ID: 660-66417-1 DU — **Client Sample ID: Lake Monroe Boat Ramp**
Matrix: Water — **Prep Type: Total/NA**
Analysis Batch: 157231

Analyte	Sample Result	Sample Qualifier		DU Result	DU Qualifier	Unit	D			RPD	RPD Limit
Turbidity	3.3			3.39		NTU				2	20

Method: SM 2320B - Alkalinity

Lab Sample ID: MB 660-157267/1 — **Client Sample ID: Method Blank**
Matrix: Water — **Prep Type: Total/NA**
Analysis Batch: 157267

Analyte	MB Result	MB Qualifier	PQL	MDL	Unit	D	Prepared	Analyzed	Dil Fac
Alkalinity as CaCO3	1.0	U	1.0	1.0	mg/L			04/17/15 05:25	1

Lab Sample ID: LCS 660-157267/3 — **Client Sample ID: Lab Control Sample**
Matrix: Water — **Prep Type: Total/NA**
Analysis Batch: 157267

Analyte			Spike Added	LCS Result	LCS Qualifier	Unit	D	%Rec	%Rec. Limits		
Alkalinity as CaCO3			118	124		mg/L		105	90 - 110		

Method: SM 2320B - Alkalinity (Continued)

Lab Sample ID: 660-66414-C-2 DU — **Client Sample ID: Duplicate**
Matrix: Water — **Prep Type: Total/NA**
Analysis Batch: 157267

Analyte	Sample Result	Sample Qualifier		DU Result	DU Qualifier	Unit	D			RPD	RPD Limit
Alkalinity as CaCO3	150			154		mg/L				0.5	30

Method: SM 2540C - Solids, Total Dissolved (TDS)

Lab Sample ID: MB 660-157274/1 — **Client Sample ID: Method Blank**
Matrix: Water — **Prep Type: Total/NA**
Analysis Batch: 157274

Analyte	MB Result	MB Qualifier	PQL	MDL	Unit	D	Prepared	Analyzed	Dil Fac
Total Dissolved Solids	5.0	U	5.0	5.0	mg/L			04/17/15 14:35	1

Lab Sample ID: LCS 660-157274/2 — **Client Sample ID: Lab Control Sample**
Matrix: Water — **Prep Type: Total/NA**
Analysis Batch: 157274

Analyte			Spike Added	LCS Result	LCS Qualifier	Unit	D	%Rec	%Rec. Limits		
Total Dissolved Solids			10000	9400		mg/L		94	80 - 120		

Lab Sample ID: 660-66414-B-1 DU — **Client Sample ID: Duplicate**
Matrix: Water — **Prep Type: Total/NA**
Analysis Batch: 157274

Analyte	Sample Result	Sample Qualifier		DU Result	DU Qualifier	Unit	D			RPD	RPD Limit
Total Dissolved Solids	350			352		mg/L				1	20

Method: SM 2540D - Solids, Total Suspended (TSS)

Lab Sample ID: MB 660-157258/1 — **Client Sample ID: Method Blank**
Matrix: Water — **Prep Type: Total/NA**
Analysis Batch: 157258

Analyte	MB Result	MB Qualifier	PQL	MDL	Unit	D	Prepared	Analyzed	Dil Fac
Total Suspended Solids	5.0	U	5.0	5.0	mg/L			04/17/15 09:45	1

Lab Sample ID: LCS 660-157258/2 — **Client Sample ID: Lab Control Sample**
Matrix: Water — **Prep Type: Total/NA**
Analysis Batch: 157258

Analyte			Spike Added	LCS Result	LCS Qualifier	Unit	D	%Rec	%Rec. Limits		
Total Suspended Solids			100	85.6		mg/L		86	80 - 120		

Lab Sample ID: 660-66411-A-1 DU — **Client Sample ID: Duplicate**
Matrix: Water — **Prep Type: Total/NA**
Analysis Batch: 157258

Analyte	Sample Result	Sample Qualifier		DU Result	DU Qualifier	Unit	D			RPD	RPD Limit
Total Suspended Solids	90			114	J3	mg/L				22	20

Method: SM 4500 H+ B - pH

Lab Sample ID: LCS 660-157288/1 — **Client Sample ID: Lab Control Sample**
Matrix: Water — **Prep Type: Total/NA**
Analysis Batch: 157288

Analyte			Spike Added	LCS Result	LCS Qualifier	Unit	D	%Rec	%Rec. Limits		
pH			6.00	6.010		SU		100	98 - 102		

Lab Sample ID: 660-66403-K-1 DU — **Client Sample ID: Duplicate**
Matrix: Water — **Prep Type: Total/NA**
Analysis Batch: 157288

Analyte	Sample Result	Sample Qualifier		DU Result	DU Qualifier	Unit	D			RPD	RPD Limit
pH	7.56			7.570		SU				0.1	20

Method: SM 4500 P E - Orthophosphate

Lab Sample ID: MB 660-157246/1-A — **Client Sample ID: Method Blank**
Matrix: Water — **Prep Type: Dissolved**
Analysis Batch: 157245

Analyte	MB Result	MB Qualifier	PQL	MDL	Unit	D	Prepared	Analyzed	Dil Fac
Orthophosphate	0.0050	U	0.010	0.0050	mg/L			04/16/15 10:30	1

Lab Sample ID: LCS 660-157246/2-A — **Client Sample ID: Lab Control Sample**
Matrix: Water — **Prep Type: Dissolved**
Analysis Batch: 157245

Analyte			Spike Added	LCS Result	LCS Qualifier	Unit	D	%Rec	%Rec. Limits		
Orthophosphate			0.300	0.318		mg/L		106	90 - 110		

Lab Sample ID: 660-66410-G-1 MS — **Client Sample ID: Matrix Spike**
Matrix: Water — **Prep Type: Dissolved**
Analysis Batch: 157245

Analyte	Sample Result	Sample Qualifier	Spike Added	MS Result	MS Qualifier	Unit	D	%Rec	%Rec. Limits		
Orthophosphate	0.077		0.300	0.393		mg/L		105	90 - 110		

Lab Sample ID: 660-66410-G-1 MSD — **Client Sample ID: Matrix Spike Duplicate**
Matrix: Water — **Prep Type: Dissolved**
Analysis Batch: 157245

Analyte	Sample Result	Sample Qualifier	Spike Added	MSD Result	MSD Qualifier	Unit	D	%Rec	%Rec. Limits	RPD	RPD Limit
Orthophosphate	0.077		0.300	0.391		mg/L		105	90 - 110	1	30

Method: SM 5310C - TOC

Lab Sample ID: MB 490-242993/1 — **Client Sample ID: Method Blank**
Matrix: Water — **Prep Type: Total/NA**
Analysis Batch: 242993

Analyte	MB Result	MB Qualifier	PQL	MDL	Unit	D	Prepared	Analyzed	Dil Fac
Total Organic Carbon	0.50	U	1.0	0.50	mg/L			04/21/15 12:25	1

Method: SM 5310C - TOC (Continued)

Lab Sample ID: LCS 490-242993/4 — **Client Sample ID: Lab Control Sample**
Matrix: Water — **Prep Type: Total/NA**
Analysis Batch: 242993

Analyte	Spike Added	LCS Result	LCS Qualifier	Unit	D	%Rec	%Rec. Limits
Total Organic Carbon	10.0	9.74		mg/L		97	90 - 110
TOC Result 1	10.0	9.79		mg/L		98	90 - 110
TOC Result 2	10.0	9.70		mg/L		97	90 - 110

Lab Sample ID: 490-76679-A-4 MS — **Client Sample ID: Matrix Spike**
Matrix: Water — **Prep Type: Total/NA**
Analysis Batch: 242993

Analyte	Sample Result	Sample Qualifier	Spike Added	MS Result	MS Qualifier	Unit	D	%Rec	%Rec. Limits
Total Organic Carbon	1.1	J3	20.0	12.6	J3	mg/L		57	75 - 122
TOC Result 1	1.2	J3	20.0	13.3	J3	mg/L		61	75 - 122
TOC Result 2	1.1	J3	20.0	11.8	J3	mg/L		54	75 - 122

QC Association Summary

Client: Tetra Tech, Inc.
Project/Site: Lake Monroe

TestAmerica Job ID: 660-66417-1

HPLC/IC

Analysis Batch: 379187

Lab Sample ID	Client Sample ID	Prep Type	Matrix	Method	Prep Batch
640-50943-A-1 MS	Matrix Spike	Total/NA	Water	300.0	
640-50943-A-1 MSD	Matrix Spike Duplicate	Total/NA	Water	300.0	
660-66417-1	Lake Monroe Boat Ramp	Total/NA	Water	300.0	
LCS 680-379187/36	Lab Control Sample	Total/NA	Water	300.0	
LCSD 680-379187/37	Lab Control Sample Dup	Total/NA	Water	300.0	
MB 680-379187/35	Method Blank	Total/NA	Water	300.0	

Metals

Prep Batch: 157251

Lab Sample ID	Client Sample ID	Prep Type	Matrix	Method	Prep Batch
660-66416-C-5-B MS	Matrix Spike	Total Recoverable	Water	3005A	
660-66416-C-5-C MSD	Matrix Spike Duplicate	Total Recoverable	Water	3005A	
660-66417-1	Lake Monroe Boat Ramp	Total Recoverable	Water	3005A	
LCS 660-157251/2-A	Lab Control Sample	Total Recoverable	Water	3005A	
MB 660-157251/1-A	Method Blank	Total Recoverable	Water	3005A	

Analysis Batch: 157263

Lab Sample ID	Client Sample ID	Prep Type	Matrix	Method	Prep Batch
660-66416-C-5-B MS	Matrix Spike	Total Recoverable	Water	6010B	157251
660-66416-C-5-C MSD	Matrix Spike Duplicate	Total Recoverable	Water	6010B	157251
660-66417-1	Lake Monroe Boat Ramp	Total Recoverable	Water	6010B	157251
LCS 660-157251/2-A	Lab Control Sample	Total Recoverable	Water	6010B	157251
MB 660-157251/1-A	Method Blank	Total Recoverable	Water	6010B	157251

Prep Batch: 157304

Lab Sample ID	Client Sample ID	Prep Type	Matrix	Method	Prep Batch
660-66417-1	Lake Monroe Boat Ramp	Total/NA	Water	7470A	
660-66448-D-1-B MS	Matrix Spike	Total/NA	Water	7470A	
660-66448-D-1-C MSD	Matrix Spike Duplicate	Total/NA	Water	7470A	
LCS 660-157304/14-A	Lab Control Sample	Total/NA	Water	7470A	
MB 660-157304/13-A	Method Blank	Total/NA	Water	7470A	

Analysis Batch: 157319

Lab Sample ID	Client Sample ID	Prep Type	Matrix	Method	Prep Batch
660-66417-1	Lake Monroe Boat Ramp	Total/NA	Water	7470A	157304
660-66448-D-1-B MS	Matrix Spike	Total/NA	Water	7470A	157304
660-66448-D-1-C MSD	Matrix Spike Duplicate	Total/NA	Water	7470A	157304
LCS 660-157304/14-A	Lab Control Sample	Total/NA	Water	7470A	157304
MB 660-157304/13-A	Method Blank	Total/NA	Water	7470A	157304

General Chemistry

Analysis Batch: 157231

Lab Sample ID	Client Sample ID	Prep Type	Matrix	Method	Prep Batch
660-66417-1	Lake Monroe Boat Ramp	Total/NA	Water	SM 2130B	
660-66417-1 DU	Lake Monroe Boat Ramp	Total/NA	Water	SM 2130B	
LCS 660-157231/3	Lab Control Sample	Total/NA	Water	SM 2130B	
LCSD 660-157231/6	Lab Control Sample Dup	Total/NA	Water	SM 2130B	
MB 660-157231/2	Method Blank	Total/NA	Water	SM 2130B	

General Chemistry (Continued)

Analysis Batch: 157245

Lab Sample ID	Client Sample ID	Prep Type	Matrix	Method	Prep Batch
660-66410-G-1 MS	Matrix Spike	Dissolved	Water	SM 4500 P E	
660-66410-G-1 MSD	Matrix Spike Duplicate	Dissolved	Water	SM 4500 P E	
660-66417-1	Lake Monroe Boat Ramp	Dissolved	Water	SM 4500 P E	
LCS 660-157246/2-A	Lab Control Sample	Dissolved	Water	SM 4500 P E	157246
MB 660-157246/1-A	Method Blank	Dissolved	Water	SM 4500 P E	157246

Filtration Batch: 157246

Lab Sample ID	Client Sample ID	Prep Type	Matrix	Method	Prep Batch
LCS 660-157246/2-A	Lab Control Sample	Dissolved	Water	FILTRATION	
MB 660-157246/1-A	Method Blank	Dissolved	Water	FILTRATION	

Analysis Batch: 157248

Lab Sample ID	Client Sample ID	Prep Type	Matrix	Method	Prep Batch
660-66410-B-1 DU	Duplicate	Total/NA	Water	SM 2120B	
660-66417-1	Lake Monroe Boat Ramp	Total/NA	Water	SM 2120B	
LCS 660-157248/5	Lab Control Sample	Total/NA	Water	SM 2120B	
MB 660-157248/4	Method Blank	Total/NA	Water	SM 2120B	

Analysis Batch: 157258

Lab Sample ID	Client Sample ID	Prep Type	Matrix	Method	Prep Batch
660-66411-A-1 DU	Duplicate	Total/NA	Water	SM 2540D	
660-66417-1	Lake Monroe Boat Ramp	Total/NA	Water	SM 2540D	
LCS 660-157258/2	Lab Control Sample	Total/NA	Water	SM 2540D	
MB 660-157258/1	Method Blank	Total/NA	Water	SM 2540D	

Analysis Batch: 157267

Lab Sample ID	Client Sample ID	Prep Type	Matrix	Method	Prep Batch
660-66414-C-2 DU	Duplicate	Total/NA	Water	SM 2320B	
660-66417-1	Lake Monroe Boat Ramp	Total/NA	Water	SM 2320B	
LCS 660-157267/3	Lab Control Sample	Total/NA	Water	SM 2320B	
MB 660-157267/1	Method Blank	Total/NA	Water	SM 2320B	

Analysis Batch: 157274

Lab Sample ID	Client Sample ID	Prep Type	Matrix	Method	Prep Batch
660-66414-B-1 DU	Duplicate	Total/NA	Water	SM 2540C	
660-66417-1	Lake Monroe Boat Ramp	Total/NA	Water	SM 2540C	
LCS 660-157274/2	Lab Control Sample	Total/NA	Water	SM 2540C	
MB 660-157274/1	Method Blank	Total/NA	Water	SM 2540C	

Analysis Batch: 157288

Lab Sample ID	Client Sample ID	Prep Type	Matrix	Method	Prep Batch
660-66403-K-1 DU	Duplicate	Total/NA	Water	SM 4500 H+ B	
660-66417-1	Lake Monroe Boat Ramp	Total/NA	Water	SM 4500 H+ B	
LCS 660-157288/1	Lab Control Sample	Total/NA	Water	SM 4500 H+ B	

Analysis Batch: 242993

Lab Sample ID	Client Sample ID	Prep Type	Matrix	Method	Prep Batch
490-76679-A-4 MS	Matrix Spike	Total/NA	Water	SM 5310C	
660-66417-1	Lake Monroe Boat Ramp	Total/NA	Water	SM 5310C	
LCS 490-242993/4	Lab Control Sample	Total/NA	Water	SM 5310C	
MB 490-242993/1	Method Blank	Total/NA	Water	SM 5310C	

General Chemistry (Continued)

Analysis Batch: 379159

Lab Sample ID	Client Sample ID	Prep Type	Matrix	Method	Prep Batch
660-66356-E-5 DU	Duplicate	Total/NA	Water	4500 S2 F-2011	
660-66417-1	Lake Monroe Boat Ramp	Total/NA	Water	4500 S2 F-2011	
LCS 680-379159/2	Lab Control Sample	Total/NA	Water	4500 S2 F-2011	
LCSD 680-379159/3	Lab Control Sample Dup	Total/NA	Water	4500 S2 F-2011	
MB 680-379159/1	Method Blank	Total/NA	Water	4500 S2 F-2011	

Analysis Batch: 379203

Lab Sample ID	Client Sample ID	Prep Type	Matrix	Method	Prep Batch
660-66417-1	Lake Monroe Boat Ramp	Total/NA	Water	353.2	
680-111670-A-1 MS	Matrix Spike	Total/NA	Water	353.2	
680-111670-A-1 MSD	Matrix Spike Duplicate	Total/NA	Water	353.2	
680-111670-A-2 DU	Duplicate	Total/NA	Water	353.2	
LCS 680-379203/15	Lab Control Sample	Total/NA	Water	353.2	
MB 680-379203/13	Method Blank	Total/NA	Water	353.2	

Prep Batch: 379358

Lab Sample ID	Client Sample ID	Prep Type	Matrix	Method	Prep Batch
660-66417-1	Lake Monroe Boat Ramp	Total/NA	Water	Digestion	
680-111661-B-1-B MS	Matrix Spike	Total/NA	Water	Digestion	
680-111661-B-1-C MSD	Matrix Spike Duplicate	Total/NA	Water	Digestion	
680-111661-B-2-B DU	Duplicate	Total/NA	Water	Digestion	
LCS 680-379358/2-A	Lab Control Sample	Total/NA	Water	Digestion	
MB 680-379358/1-A	Method Blank	Total/NA	Water	Digestion	

Analysis Batch: 379569

Lab Sample ID	Client Sample ID	Prep Type	Matrix	Method	Prep Batch
660-66417-1	Lake Monroe Boat Ramp	Total/NA	Water	365.4	379358
680-111661-B-1-B MS	Matrix Spike	Total/NA	Water	365.4	379358
680-111661-B-1-C MSD	Matrix Spike Duplicate	Total/NA	Water	365.4	379358
680-111661-B-2-B DU	Duplicate	Total/NA	Water	365.4	379358
LCS 680-379358/2-A	Lab Control Sample	Total/NA	Water	365.4	379358
MB 680-379358/1-A	Method Blank	Total/NA	Water	365.4	379358

Analysis Batch: 379570

Lab Sample ID	Client Sample ID	Prep Type	Matrix	Method	Prep Batch
660-66417-1	Lake Monroe Boat Ramp	Total/NA	Water	351.2	379358
680-111661-B-1-B MS	Matrix Spike	Total/NA	Water	351.2	379358
680-111661-B-1-C MSD	Matrix Spike Duplicate	Total/NA	Water	351.2	379358
680-111661-B-2-B DU	Duplicate	Total/NA	Water	351.2	379358
LCS 680-379358/2-A	Lab Control Sample	Total/NA	Water	351.2	379358
MB 680-379358/1-A	Method Blank	Total/NA	Water	351.2	379358

Analysis Batch: 379604

Lab Sample ID	Client Sample ID	Prep Type	Matrix	Method	Prep Batch
660-66417-1	Lake Monroe Boat Ramp	Total/NA	Water	Total Nitrogen	

Analysis Batch: 379704

Lab Sample ID	Client Sample ID	Prep Type	Matrix	Method	Prep Batch
660-66409-F-4 MS	Matrix Spike	Total/NA	Water	350.1	
660-66409-F-4 MSD	Matrix Spike Duplicate	Total/NA	Water	350.1	
660-66410-C-9 DU	Duplicate	Total/NA	Water	350.1	

General Chemistry (Continued)

Analysis Batch: 379704 (Continued)

Lab Sample ID	Client Sample ID	Prep Type	Matrix	Method	Prep Batch
660-66417-1	Lake Monroe Boat Ramp	Total/NA	Water	350.1	
LCS 680-379704/1	Lab Control Sample	Total/NA	Water	350.1	
MB 680-379704/2	Method Blank	Total/NA	Water	350.1	

Lab Chronicle

Client: Tetra Tech, Inc.
Project/Site: Lake Monroe

TestAmerica Job ID: 660-66417-1

Client Sample ID: Lake Monroe Boat Ramp

Lab Sample ID: 660-66417-1

Date Collected: 04/15/15 11:00

Matrix: Water

Date Received: 04/16/15 11:21

Prep Type	Batch Type	Batch Method	Run	Dilution Factor	Batch Number	Prepared or Analyzed	Analyst	Lab
Total/NA	Analysis	300.0		10	379187	04/17/15 22:09	AJO	TAL SAV
Total Recoverable	Prep	3005A			157251	04/17/15 07:39	ALQ	TAL TAM
Total Recoverable	Analysis	6010B		1	157263	04/17/15 13:16	GAF	TAL TAM
Total/NA	Prep	7470A			157304	04/20/15 10:00	GH1	TAL TAM
Total/NA	Analysis	7470A		1	157319	04/20/15 14:27	GH1	TAL TAM
Total/NA	Analysis	350.1		1	379704	04/22/15 08:25	JME	TAL SAV
Total/NA	Prep	Digestion			379358	04/20/15 07:46	JRJ	TAL SAV
Total/NA	Analysis	351.2		1	379570	04/21/15 11:21	JER	TAL SAV
Total/NA	Analysis	353.2		1	379203	04/17/15 14:56	GRX	TAL SAV
Total/NA	Prep	Digestion			379358	04/20/15 07:46	JRJ	TAL SAV
Total/NA	Analysis	365.4		1	379569	04/21/15 11:21	JER	TAL SAV
Total/NA	Analysis	4500 S2 F-2011		1	379159	04/17/15 13:03	JRJ	TAL SAV
Total/NA	Analysis	SM 2120B		2	157248	04/17/15 05:45	AJG	TAL TAM
Total/NA	Analysis	SM 2130B		1	157231	04/16/15 11:55	AJG	TAL TAM
Total/NA	Analysis	SM 2320B		1	157267	04/17/15 05:25	AJG	TAL TAM
Total/NA	Analysis	SM 2540C		1	157274	04/17/15 14:35	SC1	TAL TAM
Total/NA	Analysis	SM 2540D		1	157258	04/17/15 09:45	SC1	TAL TAM
Total/NA	Analysis	SM 4500 H+ B		1	157288	04/18/15 12:15	ELE	TAL TAM
Dissolved	Analysis	SM 4500 P E		1	157245	04/16/15 13:30	ELE	TAL TAM
Total/NA	Analysis	SM 5310C		1	242993	04/21/15 12:25	JAB	TAL NSH
Total/NA	Analysis	Total Nitrogen		1	379604	04/21/15 14:28	JER	TAL SAV

Laboratory References:

ENCO = ENCO-Orlando, 10775 Central Port Drive, Orlando, FL 32824, TEL (407)826-5314

TAL NSH = TestAmerica Nashville, 2960 Foster Creighton Drive, Nashville, TN 37204, TEL (615)726-0177

TAL SAV = TestAmerica Savannah, 5102 LaRoche Avenue, Savannah, GA 31404, TEL (912)354-7858

TAL TAM = TestAmerica Tampa, 6712 Benjamin Road, Suite 100, Tampa, FL 33634, TEL (813)885-7427

Method Summary

Client: Tetra Tech, Inc.
Project/Site: Lake Monroe

TestAmerica Job ID: 660-66417-1

Method	Method Description	Protocol	Laboratory
300.0	Anions, Ion Chromatography	MCAWW	TAL SAV
6010B	Metals (ICP)	SW846	TAL TAM
7470A	Mercury (CVAA)	SW846	TAL TAM
350.1	Nitrogen, Ammonia	MCAWW	TAL SAV
351.2	Nitrogen, Total Kjeldahl	MCAWW	TAL SAV
353.2	Nitrogen, Nitrate-Nitrite	MCAWW	TAL SAV
365.4	Phosphorus, Total	EPA	TAL SAV
4500 S2 F-2011	Sulfide, Total	SM	TAL SAV
SM 2120B	Color, Colorimetric	SM	TAL TAM
SM 2130B	Turbidity	SM	TAL TAM
SM 2320B	Alkalinity	SM	TAL TAM
SM 2540C	Solids, Total Dissolved (TDS)	SM	TAL TAM
SM 2540D	Solids, Total Suspended (TSS)	SM	TAL TAM
SM 4500 H+ B	pH	SM	TAL TAM
SM 4500 P E	Orthophosphate	SM	TAL TAM
SM 5310C	TOC	SM	TAL NSH
Total Nitrogen	Nitrogen, Total	EPA	TAL SAV
Chlorophyll A ug/L	Chlorophyll A	NONE	ENCO
Fecal Coliform	SM 9222D Fecal Coliform by MF	NONE	ENCO

Protocol References:

EPA = US Environmental Protection Agency

MCAWW = "Methods For Chemical Analysis Of Water And Wastes", EPA-600/4-79-020, March 1983 And Subsequent Revisions.

NONE = NONE

SM = "Standard Methods For The Examination Of Water And Wastewater",

SW846 = "Test Methods For Evaluating Solid Waste, Physical/Chemical Methods", Third Edition, November 1986 And Its Updates.

Laboratory References:

ENCO = ENCO-Orlando, 10775 Central Port Drive, Orlando, FL 32824, TEL (407)826-5314

TAL NSH = TestAmerica Nashville, 2960 Foster Creighton Drive, Nashville, TN 37204, TEL (615)726-0177

TAL SAV = TestAmerica Savannah, 5102 LaRoche Avenue, Savannah, GA 31404, TEL (912)354-7858

TAL TAM = TestAmerica Tampa, 6712 Benjamin Road, Suite 100, Tampa, FL 33634, TEL (813)885-7427

Certification Summary

Client: Tetra Tech, Inc.
Project/Site: Lake Monroe

TestAmerica Job ID: 660-66417-1

Laboratory: TestAmerica Tampa

Unless otherwise noted, all analytes for this laboratory were covered under each certification below.

Authority	Program	EPA Region	Certification ID	Expiration Date
Florida	NELAP	4	E84282	06-30-15

The following analytes are included in this report, but are not certified under this certification:

Analysis Method	Prep Method	Matrix	Analyte
SM 2120B		Water	pH at time of analysis

Laboratory: TestAmerica Nashville

All certifications held by this laboratory are listed. Not all certifications are applicable to this report.

Authority	Program	EPA Region	Certification ID	Expiration Date
A2LA	A2LA		NA: NELAP & A2LA	12-31-15
A2LA	ISO/IEC 17025		0453.07	12-31-15
Alaska (UST)	State Program	10	UST-087	10-31-15
Arizona	State Program	9	AZ0473	05-05-15 *
California	State Program	9	2938	10-31-16
Connecticut	State Program	1	PH-0220	12-31-15
Florida	NELAP	4	E87358	06-30-15
Illinois	NELAP	5	200010	12-09-15
Iowa	State Program	7	131	04-01-16
Kansas	NELAP	7	E-10229	04-30-15 *
Kentucky (UST)	State Program	4	19	06-30-15
Kentucky (WW)	State Program	4	90038	12-31-15
Louisiana	NELAP	6	30613	06-30-15
Maryland	State Program	3	316	03-31-16
Massachusetts	State Program	1	M-TN032	06-30-15
Minnesota	NELAP	5	047-999-345	12-31-15
Mississippi	State Program	4	N/A	06-30-15
Montana (UST)	State Program	8	NA	02-24-20
Nevada	State Program	9	TN00032	07-31-15
New Hampshire	NELAP	1	2963	10-09-15
New Jersey	NELAP	2	TN965	06-30-15
New York	NELAP	2	11342	03-31-16
North Carolina (WW/SW)	State Program	4	387	12-31-15
North Dakota	State Program	8	R-146	06-30-15
Ohio VAP	State Program	5	CL0033	10-16-15
Oklahoma	State Program	6	9412	08-31-15
Oregon	NELAP	10	TN200001	04-27-16
Pennsylvania	NELAP	3	68-00585	06-30-15
Rhode Island	State Program	1	LAO00268	12-30-15
South Carolina	State Program	4	84009 (001)	02-28-15 *
South Carolina (DW)	State Program	4	84009 (002)	02-23-17
Tennessee	State Program	4	2008	02-23-17
Texas	NELAP	6	T104704077	08-31-15
USDA	Federal		S-48469	10-30-16
Utah	NELAP	8	TN00032	07-31-15
Virginia	NELAP	3	460152	06-14-15
Washington	State Program	10	C789	07-19-15
West Virginia DEP	State Program	3	219	02-28-16
Wisconsin	State Program	5	998020430	08-31-15
Wyoming (UST)	A2LA	8	453.07	12-31-15

* Certification renewal pending - certification considered valid.

Certification Summary

Client: Tetra Tech, Inc.
Project/Site: Lake Monroe

TestAmerica Job ID: 660-66417-1

Laboratory: TestAmerica Savannah

Unless otherwise noted, all analytes for this laboratory were covered under each certification below.

Authority	Program	EPA Region	Certification ID	Expiration Date
Florida	NELAP	4	E87052	06-30-15

The following analytes are included in this report, but certification is not offered by the governing authority:

Analysis Method	Prep Method	Matrix	Analyte
Total Nitrogen		Water	Nitrogen, Total

ENCO Laboratories

Accurate. Timely. Responsive. Innovative.

10775 Central Port Drive
Orlando FL, 32824
Phone: 407.826.5314 FAX: 407.850.6945

Wednesday, April 22, 2015
Test America - Tampa (TE022)
Attn: Nancy Robertson
6712 Benjamin Road, Suite 100
Tampa, FL 33634

RE: Laboratory Results for
Project Number: 660-66417-1, Project Name/Desc: Test America -
ENCO Workorder(s): A502319

Dear Nancy Robertson,

Enclosed is a copy of your laboratory report for test samples received by our laboratory on Wednesday, April 15, 2015.

Unless otherwise noted in an attached project narrative, all samples were received in acceptable condition and processed in accordance with the referenced methods/procedures. Results for these procedures apply only to the samples as submitted.

The analytical results contained in this report are in compliance with NELAC standards, except as noted in the project narrative. This report shall not be reproduced except in full, without the written approval of the Laboratory.

This report contains only those analyses performed by Environmental Conservation Laboratories. Unless otherwise noted, all analyses were performed at ENCO Orlando. Data from outside organizations will be reported under separate cover.

If you have any questions or require further information, please do not hesitate to contact me.

Sincerely,

Ronald Wambles For David Camacho

Project Manager

Enclosure(s)

SAMPLE SUMMARY/LABORATORY CHRONICLE

Client ID: Lake Monroe Boat Ramp (660-66417-1) **Lab ID:** A502319-01 **Sampled:** 04/15/15 11:00 **Received:** 04/15/15 15:00

Parameter	Hold Date/Time(s)				Prep Date/Time(s)		Analysis Date/Time(s)	
SM 10200H-2001	04/17/15	11:00	04/29/15		04/15/15	16:00	04/20/15	14:18
SM 9222D-1997	04/15/15	17:00	04/16/15	15:50	04/15/15	15:50	04/16/15	15:50

SAMPLE DETECTION SUMMARY

Client ID: Lake Monroe Boat Ramp (660-66417-1) **Lab ID:** A502319-01

Analyte	Results	Flag	MDL	PQL	Units	Method	Notes
Chlorophyll a	13		0.50	0.50	ug/L	SM 10200H-2001	
Coliform, Fecal	5		1	1	CFU/100 ml	SM 9222D-1997	

This report relates only to the sample as received by the laboratory, and may only be reproduced in full.

www.encolabs.com

ANALYTICAL RESULTS

Description: Lake Monroe Boat Ramp (660-66417-1) **Lab Sample ID:** A502319-01 **Received:** 04/15/15 15:00

Matrix: Water **Sampled:** 04/15/15 11:00 **Work Order:** A502319

Project: Test America - **Sampled By:**

Classical Chemistry Parameters

^ - ENCO Orlando certified analyte [NELAC E83182]

Analyte [CAS Number]	Results	Flag	Units	DF	MDL	PQL	Batch	Method	Analyzed	By	Notes
Chlorophyll a [42617-16-3]^	**13**		ug/L	1	0.50	0.50	5D15021	SM 10200H-2001	04/20/15 14:18	M1N	

Microbiological Parameters

^ - ENCO Orlando certified analyte [NELAC E83182]

Analyte [CAS Number]	Results	Flag	Units	DF	MDL	PQL	Batch	Method	Analyzed	By	Notes
Coliform, Fecal^	**5**		CFU/100 ml	1	1	1	5D15043	SM 9222D-1997	04/16/15 15:50	M1N	

QUALITY CONTROL DATA

Classical Chemistry Parameters - Quality Control

Batch 5D15021 - NO PREP

Blank (5D15021-BLK1) Prepared: 04/15/2015 08:52 Analyzed: 04/20/2015 14:18

Analyte	Result	Flag	POL	Units	Spike Level	Source Result	%REC	%REC Limits	RPD	RPD Limit	Notes
Chlorophyll a	0.50	U	0.50	ug/L							

Duplicate (5D15021-DUP1) Prepared: 04/15/2015 08:52 Analyzed: 04/20/2015 14:18

Source: A501724-01

Analyte	Result	Flag	POL	Units	Spike Level	Source Result	%REC	%REC Limits	RPD	RPD Limit	Notes
Chlorophyll a	15		0.50	ug/L		15			2	25	

Microbiological Parameters - Quality Control

Batch 5D15043 - NO PREP

Blank (5D15043-BLK1) Prepared: 04/15/2015 12:54 Analyzed: 04/16/2015 12:54

Analyte	Result	Flag	POL	Units	Spike Level	Source Result	%REC	%REC Limits	RPD	RPD Limit	Notes
Coliform, Fecal	**Absent**	**U**	1	CFU/100 ml							

Duplicate (5D15043-DUP1) Prepared: 04/15/2015 12:54 Analyzed: 04/16/2015 12:54

Source: A502302-01

Analyte	Result	Flag	POL	Units	Spike Level	Source Result	%REC	%REC Limits	RPD	RPD Limit	Notes
Coliform, Fecal	<1	U	1	CFU/100 ml		1 U				25	

FLAGS/NOTES AND DEFINITIONS

PQL	PQL: Practical Quantitation Limit.
B	Results are based upon membrane filter colony counts that are outside the method indicated ideal range.
I	The reported value is between the laboratory method detection limit (MDL) and the practical quantitation limit (PQL).
J	Estimated value.
K	Off-scale low; Actual value is known to be less than the value given.
L	Off-scale high; Actual value is known to be greater than value given.
M	Presence of analyte is verified but not quantified; the actual value is less than the MRL but greater than the MDL.
N	Presumptive evidence of presence of material.
O	Sampled, but analysis lost or not performed.
Q	Sample exceeded the accepted holding time.
T	Value reported is less than the laboratory method detection limit. The value is reported for informational purposes only and shall not be used in statistical analysis.
U	Indicates that the compound was analyzed for but not detected.
V	Indicates that the analyte was detected in both the sample and the associated method blank.
Y	The laboratory analysis was from an improperly preserved sample. The data may not be accurate.
Z	Too many colonies were present (TNTC); the numeric value represents the filtration volume.
?	Data are rejected and should not be used. Some or all of the quality control data for the analyte were outside criteria, and the presence or absence of the analyte cannot be determined from the data.
*****	Not reported due to interference.

TestAmerica Tampa
6712 Benjamin Road Suite 100
Tampa, FL 33634
Phone (813) 885-7427 Fax (813) 885-7049

Chain of Custody Record

TestAmerica
THE LEADER IN ENVIRONMENTAL TESTING

Client Information (Sub Contract Lab)	Sampler:	Lab PM: Robertson, Nancy	Carrier Tracking No(s):	COC No: 660-77351.1
Client Contact: Shipping/Receiving	Phone:	E-Mail: nancy.robertson@testamericainc.com		Page: Page 1 of 1
Company: Environmental Conservation Laboratories				Job #: 660-66417-1
Address: 10775 Central Port Drive,	Due Date Requested: 4/22/2015			
City: Orlando	TAT Requested (days):			
State, Zip: FL, 32824				
Phone: 407-826-5314(Tel)	PO #:			
Email:	WO #:			
Project Name: Lake Monroe	Project #: 66008532			
Site:	SSOW#:			

Analysis Requested

Preservation Codes:
A - HCL, B - NaOH, C - Zn Acetate, D - Nitric Acid, E - NaHSO4, F - MeOH, G - Amchlor, H - Ascorbic Acid, I - Ice, J - DI Water, K - EDTA, L - EDA, M - Hexane, N - None, O - AsNaO2, P - Na2O4S, Q - Na2SO3, R - Na2S2SO3, S - H2SO4, T - TSP Dodecahydrate, U - Acetone, V - MCAA, W - ph 4-5, Z - other (specify)
Other:

A502319

Sample Identification - Client ID (Lab ID)	Sample Date	Sample Time	Sample Type (C=comp, G=grab)	Matrix (W=water, S=soil, O=waste/oil, BT=Tissue, A=Air)	Field Filtered Sample (Yes or No)	Perform MS/MSD (Yes or No)	SUB (Chlorophyll A ug/L)	SUB (Fecal Coliform) Fecal Coliform	Total Number of containers	Special Instructions/Note:
			Preservation Code:							
Lake Monroe Boat Ramp (660-66417-1)	4/15/15	11:00 Eastern		Water			X	X	2	Our price = $45

Possible Hazard Identification: Unconfirmed	Sample Disposal (A fee may be assessed if samples are retained longer than 1 month): ☐ Return To Client ☐ Disposal By Lab ☐ Archive For ____ Months
Deliverable Requested: I, II, III, IV, Other (specify)	Special Instructions/QC Requirements:

Empty Kit Relinquished by:	Date:	Time:	Method of Shipment:

Relinquished by:	Date/Time:	Company	Received by:	Date/Time:	Company
			Brandy Hu	4-15-14 1500	ENCO
Relinquished by:	Date/Time:	Company	Received by:	Date/Time:	Company
Relinquished by:	Date/Time:	Company	Received by:	Date/Time:	Company

Custody Seals Intact: Δ Yes Δ No
Custody Seal No.:
Cooler Temperature(s) °C and Other Remarks: Client cooler 45°

TestAmerica Tampa
6712 Benjamin Road
Suite 100
Tampa, FL 33634
Phone: 813.885.7427 Fax: CONTACT- Nancy Robertson (PM) Tampa

Chain of Custody Record

024504

TestAmerica
THE LEADER IN ENVIRONMENTAL TESTING
TestAmerica Laboratories, Inc.
TAL-8210 (0713)

Regulatory Program: ☐ DW ☐ NPDES ☐ RCRA ☐ Other:

Client Contact	Project Manager: Nancy Robertson	Site Contact:	Date: 4/15/15	COC No:
Company Name: ENCO	Tel/Fax:	Lab Contact: Nancy Robertson	Carrier:	____ of ____ COCs
Address:	Analysis Turnaround Time			Sampler:
City/State/Zip: Orlando FL	☐ CALENDAR DAYS ☐ WORKING DAYS			For Lab Use Only:
Phone:	TAT if different from Below ____			Walk-in Client:
Fax:	☐ 2 weeks			Lab Sampling:
Project Name: LAKE MONROE	☐ 1 week			
Project # 4400B532	☐ 2 days			Job / SDG No.:
PO#	☐ 1 day			

Sample Identification	Sample Date	Sample Time	Sample Type (C=Comp, G=Grab)	Matrix	# of Cont.	Filtered Sample (Y/N)	Perform MS / MSD (Y/N)	9222D-Fecal Coliform	Chl-A - 10/L	Sample Specific Notes: A502319
LK Monroe Boat Ramp	4/15/15	1100	G	SW	4			✓	✓	Tampa Lab will call with Log #

Preservation Used: 1= Ice, 2= HCl; 3= H2SO4; 4=HNO3; 5=NaOH; 6= Other ____

Possible Hazard Identification:
Are any samples from a listed EPA Hazardous Waste? Please List any EPA Waste Codes for the sample in the Comments Section if the lab is to dispose of the sample.
☐ Non-Hazard ☐ Flammable ☐ Skin Irritant ☐ Poison B ☐ Unknown

Sample Disposal (A fee may be assessed if samples are retained longer than 1 month)
☐ Return to Client ☐ Disposal by Lab ☐ Archive for ____ Months

Special Instructions/QC Requirements & Comments:

Custody Seals Intact: ☐ Yes ☐ No | Custody Seal No.: | Cooler Temp. (°C): Obs'd: 4.5° Corr'd: ____ | Therm ID No.: ____

Relinquished by:	Company:	Date/Time:	Received by:	Company:	Date/Time:
[signature]	TA Orlando	4/15/15 @ 1500	Brandy Hee	ENCO	4-15-15 1500
Relinquished by:	Company:	Date/Time:	Received by:	Company:	Date/Time:
Relinquished by:	Company:	Date/Time:	Received in Laboratory by:	Company:	Date/Time:

TestAmerica Tampa
6712 Benjamin Road Suite 100
Tampa, FL 33634
Phone (813) 885-7427 Fax (813) 885-7049

Chain of Custody Record

TestAmerica
THE LEADER IN ENVIRONMENTAL TESTING

4/23/2015

Client Information	Sampler:	Lab PM: Robertson, Nancy	Carrier Tracking No(s):	COC No: 660-62065-19926.1
Client Contact: Rasesh Shah	Phone: 407-839-3955	E-Mail: nancy.robertson@testamericainc.com		Page: Page 1 of 1
Company: Tetra Tech, Inc.				Job #:
Address: 201 E. Pine St., Ste. 1000	Due Date Requested:			
City: Orlando	TAT Requested (days):			
State, Zip: FL, 32801				
Phone:	PO #: Purchase Order Requested			
Email: rasesh.shah@tetratech.com	WO #:			
Project Name: Lake Monroe	Project #: 66008532			
Site:	SSOW#:			

Analysis Requested

Preservation Codes:
A - HCL, B - NaOH, C - Zn Acetate, D - Nitric Acid, E - NaHSO4, F - MeOH, G - Amchlor, H - Ascorbic Acid, I - Ice, J - DI Water, K - EDTA, L - EDA, M - Hexane, N - None, O - AsNaO2, P - Na2O4S, Q - Na2SO3, R - Na2S2SO3, S - H2SO4, T - TSP Dodecahydrate, U - Acetone, V - MCAA, W - ph 4-5, Z - other (specify)
Other:

Sample Identification	Sample Date	Sample Time	Sample Type (C=comp, G=grab)	Matrix (W=water, S=solid, O=waste/oil, BT=Tissue, A=Air)	Field Filtered Sample (Yes or No)	Perform MS/MSD (Yes or No)	2540C, 2540D	2320B, SM2130B, SM4500_H+	4500_P_E_Ortho - Orthophosphate	6010B, 7470A	2120B - Color	SUBCONTRACT - Chlorophyll A ug/L	9222D - Coliform, Fecal	300_ORGFM_28D - Chloride & Sulfate	350.1 - Ammonia as N	SM4500_S2_F - Total Sulfide	351.2, 353.2_Pres, 365.4, Nitrogen,Total	SM5310_TOC_B - Total Organic Carbon		Total Number of containers	Special Instructions/Note:
			Preservation Code:		X	X	N	N	N	D	N	N	R	N	S	CB	S	S		X	
Lake Monroe Boat Ramp	4/15/15	1100	G	Water			X	X	X	X	X	X	X	X	X	X	X	X			

Loc: 660
66417
660-66417 Chain of Custody

Possible Hazard Identification
☐ Non-Hazard ☐ Flammable ☐ Skin Irritant ☐ Poison B ☐ Unknown ☐ Radiological

Sample Disposal (A fee may be assessed if samples are retained longer than 1 month)
☐ Return To Client ☐ Disposal By Lab ☐ Archive For _____ Months

Deliverable Requested: I, II, III, IV, Other (specify)

Special Instructions/QC Requirements:

Empty Kit Relinquished by:	Date:	Time:	Method of Shipment:

Relinquished by:	Date/Time:	Company	Received by:	Date/Time:	Company
	4/15/15 1415	TT		4/15/15 @ 1415	TT
Relinquished by:	Date/Time:	Company	Received by:	Date/Time:	Company
	4/15/15 @ 1600	TT		4-16-15 0920	TA TPA
Relinquished by:	Date/Time:	Company	Received by:	Date/Time:	Company

Custody Seals Intact: Δ Yes Δ No	Custody Seal No.:	Cooler Temperature(s) °C and Other Remarks: 1.4/0.9 CU-09

TestAmerica Tampa
6712 Benjamin Road
Suite 100
Tampa, FL 33634
Phone: 813.885.7427 Fax: CONTACT- Nancy Robertson (PM) Tampa

Chain of Custody Record

024504

TestAmerica
THE LEADER IN ENVIRONMENTAL TESTING
TestAmerica Laboratories, Inc.
TAL-8210 (0713)

Regulatory Program: ☐ DW ☐ NPDES ☐ RCRA ☐ Other:

Client Contact	Project Manager: Nancy Robertson	Site Contact:	Date: 4/15/15	COC No:
Company Name: ENCO	Tel/Fax:	Lab Contact: Nancy Robertson	Carrier:	____ of ____ COCs
Address:	Analysis Turnaround Time			Sampler:
City/State/Zip: Orlando FL	☐ CALENDAR DAYS ☐ WORKING DAYS			For Lab Use Only:
Phone:	TAT if different from Below ____			Walk-in Client:
Fax:	☐ 2 weeks			Lab Sampling:
Project Name: Lake MONROE	☐ 1 week			
Site: Project # 16008532	☐ 2 days			Job / SDG No.:
PO#	☐ 1 day			

Sample Identification	Sample Date	Sample Time	Sample Type (C=Comp, G=Grab)	Matrix	# of Cont.	Filtered Sample (Y/N)	Perform MS / MSD (Y/N)	9222D-Fecal Coliform	Chl-A - vgl	Sample Specific Notes:
Lk Monroe Boat Ramp	4/15/15	1100	G	SW	4			✓	✓	Tampa Lab will call with Log #

Preservation Used: 1= Ice, 2= HCl, 3= H2SO4, 4=HNO3, 5=NaOH, 6= Other ____

Possible Hazard Identification:
Are any samples from a listed EPA Hazardous Waste? Please List any EPA Waste Codes for the sample in the Comments Section if the lab is to dispose of the sample.

☐ Non-Hazard ☐ Flammable ☐ Skin Irritant ☐ Poison B ☐ Unknown

Sample Disposal (A fee may be assessed if samples are retained longer than 1 month)

☐ Return to Client ☐ Disposal by Lab ☐ Archive for ____ Months

Special Instructions/QC Requirements & Comments:

Custody Seals Intact: ☐ Yes ☐ No | Custody Seal No.: | Cooler Temp. (°C): Obs'd: ____ Corr'd: ____ Therm ID No.: ____

Relinquished by:	Company:	Date/Time:	Received by:	Company:	Date/Time:
[signature]	TA Orlando	4/15/15 @ 1500	Brandy Hee	ENCO	4-15-15 · 1500
Relinquished by:	Company:	Date/Time:	Received by:	Company:	Date/Time.
Relinquished by:	Company:	Date/Time:	Received in Laboratory by.	Company:	Date/Time.

Login Sample Receipt Checklist

Client: Tetra Tech, Inc.

Job Number: 660-66417-1

Login Number: 66417

List Source: TestAmerica Tampa

List Number: 1

Creator: Southers, Kristin B

Question	Answer	Comment
Radioactivity wasn't checked or is </= background as measured by a survey meter.	N/A	
The cooler's custody seal, if present, is intact.	True	
Sample custody seals, if present, are intact.	True	
The cooler or samples do not appear to have been compromised or tampered with.	True	
Samples were received on ice.	True	
Cooler Temperature is acceptable.	True	
Cooler Temperature is recorded.	True	
COC is present.	True	
COC is filled out in ink and legible.	True	
COC is filled out with all pertinent information.	True	
Is the Field Sampler's name present on COC?	True	
There are no discrepancies between the containers received and the COC.	True	
Samples are received within Holding Time.	True	
Sample containers have legible labels.	True	
Containers are not broken or leaking.	True	
Sample collection date/times are provided.	True	
Appropriate sample containers are used.	True	
Sample bottles are completely filled.	True	
Sample Preservation Verified.	True	
There is sufficient vol. for all requested analyses, incl. any requested MS/MSDs	True	
Containers requiring zero headspace have no headspace or bubble is <6mm (1/4").	N/A	
Multiphasic samples are not present.	True	
Samples do not require splitting or compositing.	True	
Residual Chlorine Checked.	N/A	

Login Sample Receipt Checklist

Client: Tetra Tech, Inc.

Job Number: 660-66417-1

Login Number: 66417
List Number: 2
Creator: Banda, Christy S

List Source: TestAmerica Savannah
List Creation: 04/17/15 08:36 AM

Question	Answer	Comment
Radioactivity wasn't checked or is </= background as measured by a survey meter.	N/A	
The cooler's custody seal, if present, is intact.	True	
Sample custody seals, if present, are intact.	True	
The cooler or samples do not appear to have been compromised or tampered with.	True	
Samples were received on ice.	True	
Cooler Temperature is acceptable.	True	
Cooler Temperature is recorded.	True	
COC is present.	True	
COC is filled out in ink and legible.	True	
COC is filled out with all pertinent information.	True	
Is the Field Sampler's name present on COC?	N/A	
There are no discrepancies between the containers received and the COC.	True	
Samples are received within Holding Time.	True	
Sample containers have legible labels.	True	
Containers are not broken or leaking.	True	
Sample collection date/times are provided.	True	
Appropriate sample containers are used.	True	
Sample bottles are completely filled.	True	
Sample Preservation Verified.	N/A	
There is sufficient vol. for all requested analyses, incl. any requested MS/MSDs	True	
Containers requiring zero headspace have no headspace or bubble is <6mm (1/4").	N/A	
Multiphasic samples are not present.	True	
Samples do not require splitting or compositing.	True	
Residual Chlorine Checked.	N/A	

3. Lake Monroe Water Analytical Testing Report (04/30/2015)

TestAmerica

THE LEADER IN ENVIRONMENTAL TESTING

ANALYTICAL REPORT

TestAmerica Laboratories, Inc.
TestAmerica Tampa
6712 Benjamin Road
Suite 100
Tampa, FL 33634
Tel: (813)885-7427

TestAmerica Job ID: 660-66541-1
Client Project/Site: Lake Monroe

For:
Tetra Tech, Inc.
201 E. Pine St., Ste. 1000
Orlando, Florida 32801

Attn: Rasesh Shah

Authorized for release by:
4/30/2015 3:44:11 PM

Nancy Robertson, Project Manager II
(813)885-7427
nancy.robertson@testamericainc.com

LINKS

Review your project results through TotalAccess

Have a Question? Ask The Expert

Visit us at: www.testamericainc.com

The test results in this report meet all 2003 NELAC and 2009 TNI requirements for accredited parameters, exceptions are noted in this report. This report may not be reproduced except in full, and with written approval from the laboratory. For questions please contact the Project Manager at the e-mail address or telephone number listed on this page.

This report has been electronically signed and authorized by the signatory. Electronic signature is intended to be the legally binding equivalent of a traditionally handwritten signature.

Results relate only to the items tested and the sample(s) as received by the laboratory.

Table of Contents

Cover Page 1
Table of Contents 2
Sample Summary 3
Case Narrative 4
Definitions/Glossary 5
Detection Summary 6
Client Sample Results 7
QC Sample Results 8
QC Association Summary 18
Lab Chronicle 22
Method Summary 23
Certification Summary 24
Subcontract Data 25
Chain of Custody 32
Receipt Checklists 33

Sample Summary

Client: Tetra Tech, Inc.
Project/Site: Lake Monroe

TestAmerica Job ID: 660-66541-1

Lab Sample ID	Client Sample ID	Matrix	Collected	Received
660-66541-1	Lake Monroe Boat Ramp	Water	04/23/15 11:00	04/24/15 08:25

Job ID: 660-66541-1

Laboratory: TestAmerica Tampa

Narrative

Job Narrative
660-66541-1

Comments
No additional comments.

Receipt
The sample was received on 4/24/2015 8:25 AM; the sample arrived in good condition, properly preserved and, where required, on ice. The temperature of the cooler at receipt was 0.5º C.

HPLC/IC
No analytical or quality issues were noted, other than those described in the Definitions/Glossary page.

Metals
No analytical or quality issues were noted, other than those described in the Definitions/Glossary page.

General Chemistry
Method SM 4500 H+ B: The method requested is normally performed in the field, and performing this method in the laboratory may produce biased results.

Method SM 4500 S2 F: Insufficient sample volume was available to perform a matrix spike/matrix spike duplicate (MS/MSD) associated 380545.

No additional analytical or quality issues were noted, other than those described above or in the Definitions/Glossary page.

Subcontract non-Sister
Chlorophyll-a and coliforms were sent to ENCO labs.

Qualifiers

HPLC/IC

Qualifier	Qualifier Description
U	Indicates that the compound was analyzed for but not detected.

Metals

Qualifier	Qualifier Description
U	Indicates that the compound was analyzed for but not detected.
I	The reported value is between the laboratory method detection limit and the laboratory practical quantitation limit.

General Chemistry

Qualifier	Qualifier Description
U	Indicates that the compound was analyzed for but not detected.
Q	Sample held beyond the accepted holding time.
I	The reported value is between the laboratory method detection limit and the laboratory practical quantitation limit.
J3	Estimated value; value may not be accurate. Spike recovery or RPD outside of criteria.

Glossary

Abbreviation	These commonly used abbreviations may or may not be present in this report.
¤	Listed under the "D" column to designate that the result is reported on a dry weight basis
%R	Percent Recovery
CFL	Contains Free Liquid
CNF	Contains no Free Liquid
DER	Duplicate error ratio (normalized absolute difference)
Dil Fac	Dilution Factor
DL, RA, RE, IN	Indicates a Dilution, Re-analysis, Re-extraction, or additional Initial metals/anion analysis of the sample
DLC	Decision level concentration
MDA	Minimum detectable activity
EDL	Estimated Detection Limit
MDC	Minimum detectable concentration
MDL	Method Detection Limit
ML	Minimum Level (Dioxin)
NC	Not Calculated
ND	Not detected at the reporting limit (or MDL or EDL if shown)
PQL	Practical Quantitation Limit
QC	Quality Control
RER	Relative error ratio
RL	Reporting Limit or Requested Limit (Radiochemistry)
RPD	Relative Percent Difference, a measure of the relative difference between two points
TEF	Toxicity Equivalent Factor (Dioxin)
TEQ	Toxicity Equivalent Quotient (Dioxin)

Detection Summary

Client: Tetra Tech, Inc.
Project/Site: Lake Monroe

TestAmerica Job ID: 660-66541-1

Client Sample ID: Lake Monroe Boat Ramp — Lab Sample ID: 660-66541-1

Analyte	Result	Qualifier	PQL	MDL	Unit	Dil Fac	D	Method	Prep Type
Sulfate	63		2.0	0.80	mg/L	2		300.0	Total/NA
Chloride	250		5.0	2.0	mg/L	10		300.0	Total/NA
Iron	0.18	I	0.20	0.050	mg/L	1		6010B	Total Recoverable
Manganese	0.014		0.0040	0.0010	mg/L	1		6010B	Total Recoverable
Nitrogen, Kjeldahl	1.0		0.20	0.10	mg/L	1		351.2	Total/NA
Phosphorus, Total	0.098	I	0.10	0.041	mg/L	1		365.4	Total/NA
Total Sulfide	1.2		1.0	1.0	mg/L	1		4500 S2 F-2011	Total/NA
Total Organic Carbon	19		1.0	0.26	mg/L	1		5310C-2000	Total/NA
Color	150		50	50	PCU	10		SM 2120B	Total/NA
pH at time of analysis	7.7		1.0	1.0	SU	10		SM 2120B	Total/NA
Turbidity	2.0		0.50	0.50	NTU	1		SM 2130B	Total/NA
Alkalinity as CaCO3	79		1.0	1.0	mg/L	1		SM 2320B	Total/NA
Total Dissolved Solids	580		5.0	5.0	mg/L	1		SM 2540C	Total/NA
Total Suspended Solids	4.4		1.3	1.3	mg/L	1		SM 2540D	Total/NA
pH	7.72	Q			SU	1		SM 4500 H+ B	Total/NA
Nitrogen, Total	1.0		0.25	0.25	mg/L	1		Total Nitrogen	Total/NA
Orthophosphate	0.027		0.010	0.0050	mg/L	1		SM 4500 P E	Dissolved

This Detection Summary does not include radiochemical test results.

Client Sample Results

Client: Tetra Tech, Inc.
Project/Site: Lake Monroe

TestAmerica Job ID: 660-66541-1

Client Sample ID: Lake Monroe Boat Ramp

Lab Sample ID: 660-66541-1

Date Collected: 04/23/15 11:00
Matrix: Water
Date Received: 04/24/15 08:25

Method: 300.0 - Anions, Ion Chromatography

Analyte	Result	Qualifier	PQL	MDL	Unit	D	Prepared	Analyzed	Dil Fac
Sulfate	63		2.0	0.80	mg/L			04/28/15 15:48	2
Chloride	250		5.0	2.0	mg/L			04/28/15 16:19	10

Method: 6010B - Metals (ICP) - Total Recoverable

Analyte	Result	Qualifier	PQL	MDL	Unit	D	Prepared	Analyzed	Dil Fac
Cadmium	0.0010	U	0.0040	0.0010	mg/L		04/28/15 08:00	04/28/15 14:25	1
Iron	0.18	I	0.20	0.050	mg/L		04/28/15 08:00	04/28/15 14:25	1
Manganese	0.014		0.0040	0.0010	mg/L		04/28/15 08:00	04/28/15 14:25	1
Nickel	0.0020	U	0.0080	0.0020	mg/L		04/28/15 08:00	04/28/15 14:25	1
Zinc	0.0050	U	0.020	0.0050	mg/L		04/28/15 08:00	04/28/15 14:25	1

Method: 7470A - Mercury (CVAA)

Analyte	Result	Qualifier	PQL	MDL	Unit	D	Prepared	Analyzed	Dil Fac
Mercury	0.072	U	0.20	0.072	ug/L		04/29/15 14:20	04/29/15 17:31	1

General Chemistry

Analyte	Result	Qualifier	PQL	MDL	Unit	D	Prepared	Analyzed	Dil Fac
Ammonia as N	0.10	U	0.25	0.10	mg/L			04/28/15 11:08	1
Nitrogen, Kjeldahl	1.0		0.20	0.10	mg/L		04/29/15 09:07	04/30/15 09:44	1
Nitrate Nitrite as N	0.010	U	0.050	0.010	mg/L			04/28/15 14:13	1
Phosphorus, Total	0.098	I	0.10	0.041	mg/L		04/29/15 09:07	04/30/15 09:44	1
Total Sulfide	1.2		1.0	1.0	mg/L			04/28/15 10:16	1
Total Organic Carbon	19		1.0	0.26	mg/L			04/29/15 11:05	1
Color	150		50	50	PCU			04/24/15 12:15	10
pH at time of analysis	7.7		1.0	1.0	SU			04/24/15 12:15	10
Turbidity	2.0		0.50	0.50	NTU			04/24/15 11:50	1
Alkalinity as CaCO3	79		1.0	1.0	mg/L			04/27/15 07:25	1
Total Dissolved Solids	580		5.0	5.0	mg/L			04/27/15 15:33	1
Total Suspended Solids	4.4		1.3	1.3	mg/L			04/28/15 11:03	1
pH	7.72	Q			SU			04/24/15 11:40	1
Nitrogen, Total	1.0		0.25	0.25	mg/L			04/28/15 14:03	1

General Chemistry - Dissolved

Analyte	Result	Qualifier	PQL	MDL	Unit	D	Prepared	Analyzed	Dil Fac
Orthophosphate	0.027		0.010	0.0050	mg/L			04/24/15 11:25	1

QC Sample Results

Client: Tetra Tech, Inc.
Project/Site: Lake Monroe

TestAmerica Job ID: 660-66541-1

Method: 300.0 - Anions, Ion Chromatography

Lab Sample ID: MB 680-380693/2 — **Client Sample ID: Method Blank**
Matrix: Water — **Prep Type: Total/NA**
Analysis Batch: 380693

Analyte	MB Result	MB Qualifier	PQL	MDL	Unit	D	Prepared	Analyzed	Dil Fac
Sulfate	0.40	U	1.0	0.40	mg/L			04/28/15 09:54	1
Chloride	0.20	U	0.50	0.20	mg/L			04/28/15 09:54	1

Lab Sample ID: LCS 680-380693/3 — **Client Sample ID: Lab Control Sample**
Matrix: Water — **Prep Type: Total/NA**
Analysis Batch: 380693

Analyte	Spike Added	LCS Result	LCS Qualifier	Unit	D	%Rec	%Rec. Limits
Sulfate	10.0	10.9		mg/L		109	90 - 110
Chloride	10.0	10.6		mg/L		106	90 - 110

Lab Sample ID: LCSD 680-380693/4 — **Client Sample ID: Lab Control Sample Dup**
Matrix: Water — **Prep Type: Total/NA**
Analysis Batch: 380693

Analyte	Spike Added	LCSD Result	LCSD Qualifier	Unit	D	%Rec	%Rec. Limits	RPD	RPD Limit
Sulfate	10.0	10.9		mg/L		109	90 - 110	1	30
Chloride	10.0	10.6		mg/L		106	90 - 110	0	30

Lab Sample ID: 660-66538-B-1 MS — **Client Sample ID: Matrix Spike**
Matrix: Water — **Prep Type: Total/NA**
Analysis Batch: 380693

Analyte	Sample Result	Sample Qualifier	Spike Added	MS Result	MS Qualifier	Unit	D	%Rec	%Rec. Limits
Sulfate	21		10.0	31.3		mg/L		103	80 - 120
Chloride	11		10.0	21.8		mg/L		107	80 - 120

Lab Sample ID: 660-66538-B-1 MSD — **Client Sample ID: Matrix Spike Duplicate**
Matrix: Water — **Prep Type: Total/NA**
Analysis Batch: 380693

Analyte	Sample Result	Sample Qualifier	Spike Added	MSD Result	MSD Qualifier	Unit	D	%Rec	%Rec. Limits	RPD	RPD Limit
Sulfate	21		10.0	31.3		mg/L		103	80 - 120	0	30
Chloride	11		10.0	21.8		mg/L		107	80 - 120	0	30

Method: 6010B - Metals (ICP)

Lab Sample ID: MB 660-157491/1-A — **Client Sample ID: Method Blank**
Matrix: Water — **Prep Type: Total Recoverable**
Analysis Batch: 157498 — **Prep Batch: 157491**

Analyte	MB Result	MB Qualifier	PQL	MDL	Unit	D	Prepared	Analyzed	Dil Fac
Cadmium	0.0010	U	0.0040	0.0010	mg/L		04/28/15 08:00	04/28/15 13:36	1
Iron	0.050	U	0.20	0.050	mg/L		04/28/15 08:00	04/28/15 13:36	1
Manganese	0.0010	U	0.0040	0.0010	mg/L		04/28/15 08:00	04/28/15 13:36	1
Nickel	0.0020	U	0.0080	0.0020	mg/L		04/28/15 08:00	04/28/15 13:36	1
Zinc	0.0050	U	0.020	0.0050	mg/L		04/28/15 08:00	04/28/15 13:36	1

Method: 6010B - Metals (ICP) (Continued)

Lab Sample ID: LCS 660-157491/2-A — **Client Sample ID: Lab Control Sample**
Matrix: Water — **Prep Type: Total Recoverable**
Analysis Batch: 157498 — **Prep Batch: 157491**

Analyte	Spike Added	LCS Result	LCS Qualifier	Unit	D	%Rec	%Rec. Limits
Cadmium	1.00	0.978		mg/L		98	80 - 120
Iron	1.00	1.00		mg/L		100	80 - 120
Manganese	1.00	1.01		mg/L		101	80 - 120
Nickel	1.00	1.01		mg/L		101	80 - 120
Zinc	1.00	1.02		mg/L		102	80 - 120

Lab Sample ID: 660-66508-H-6-B MS — **Client Sample ID: Matrix Spike**
Matrix: Water — **Prep Type: Dissolved**
Analysis Batch: 157498 — **Prep Batch: 157491**

Analyte	Sample Result	Sample Qualifier	Spike Added	MS Result	MS Qualifier	Unit	D	%Rec	%Rec. Limits
Cadmium	0.0010	U	1.00	0.974		mg/L		97	80 - 120
Iron	2.8		1.00	3.85		mg/L		103	80 - 120
Manganese	0.056		1.00	1.06		mg/L		101	80 - 120
Nickel	0.0020	U	1.00	1.01		mg/L		101	80 - 120
Zinc	0.0076	I	1.00	1.02		mg/L		101	80 - 120

Lab Sample ID: 660-66508-H-6-C MSD — **Client Sample ID: Matrix Spike Duplicate**
Matrix: Water — **Prep Type: Dissolved**
Analysis Batch: 157498 — **Prep Batch: 157491**

Analyte	Sample Result	Sample Qualifier	Spike Added	MSD Result	MSD Qualifier	Unit	D	%Rec	%Rec. Limits	RPD	RPD Limit
Cadmium	0.0010	U	1.00	0.977		mg/L		98	80 - 120	0	20
Iron	2.8		1.00	3.79		mg/L		97	80 - 120	2	20
Manganese	0.056		1.00	1.06		mg/L		100	80 - 120	0	20
Nickel	0.0020	U	1.00	1.01		mg/L		101	80 - 120	0	20
Zinc	0.0076	I	1.00	1.02		mg/L		102	80 - 120	0	20

Method: 7470A - Mercury (CVAA)

Lab Sample ID: MB 660-157550/13-A — **Client Sample ID: Method Blank**
Matrix: Water — **Prep Type: Total/NA**
Analysis Batch: 157554 — **Prep Batch: 157550**

Analyte	MB Result	MB Qualifier	PQL	MDL	Unit	D	Prepared	Analyzed	Dil Fac
Mercury	0.072	U	0.20	0.072	ug/L		04/29/15 14:20	04/29/15 17:26	1

Lab Sample ID: LCS 660-157550/14-A — **Client Sample ID: Lab Control Sample**
Matrix: Water — **Prep Type: Total/NA**
Analysis Batch: 157554 — **Prep Batch: 157550**

Analyte	Spike Added	LCS Result	LCS Qualifier	Unit	D	%Rec	%Rec. Limits
Mercury	1.40	1.33		ug/L		95	80 - 120

Method: 7470A - Mercury (CVAA) (Continued)

Lab Sample ID: 660-66541-1 MS — **Client Sample ID: Lake Monroe Boat Ramp**
Matrix: Water — **Prep Type: Total/NA**
Analysis Batch: 157554 — **Prep Batch: 157550**

Analyte	Sample Result	Sample Qualifier	Spike Added	MS Result	MS Qualifier	Unit	D	%Rec	%Rec. Limits
Mercury	0.072	U	1.40	1.20		ug/L		86	80 - 120

Lab Sample ID: 660-66541-1 MSD — **Client Sample ID: Lake Monroe Boat Ramp**
Matrix: Water — **Prep Type: Total/NA**
Analysis Batch: 157554 — **Prep Batch: 157550**

Analyte	Sample Result	Sample Qualifier	Spike Added	MSD Result	MSD Qualifier	Unit	D	%Rec	%Rec. Limits	RPD	RPD Limit
Mercury	0.072	U	1.40	1.24		ug/L		88	80 - 120	3	20

Method: 350.1 - Nitrogen, Ammonia

Lab Sample ID: MB 680-380643/2 — **Client Sample ID: Method Blank**
Matrix: Water — **Prep Type: Total/NA**
Analysis Batch: 380643

Analyte	MB Result	MB Qualifier	PQL	MDL	Unit	D	Prepared	Analyzed	Dil Fac
Ammonia as N	0.10	U	0.25	0.10	mg/L			04/28/15 10:59	1

Lab Sample ID: LCS 680-380643/13 — **Client Sample ID: Lab Control Sample**
Matrix: Water — **Prep Type: Total/NA**
Analysis Batch: 380643

Analyte	Spike Added	LCS Result	LCS Qualifier	Unit	D	%Rec	%Rec. Limits
Ammonia as N	1.00	1.01		mg/L		101	90 - 110

Lab Sample ID: 640-51008-C-4 MS — **Client Sample ID: Matrix Spike**
Matrix: Water — **Prep Type: Total/NA**
Analysis Batch: 380643

Analyte	Sample Result	Sample Qualifier	Spike Added	MS Result	MS Qualifier	Unit	D	%Rec	%Rec. Limits
Ammonia as N	0.10	U	1.00	1.06		mg/L		106	90 - 110

Lab Sample ID: 640-51008-C-4 MSD — **Client Sample ID: Matrix Spike Duplicate**
Matrix: Water — **Prep Type: Total/NA**
Analysis Batch: 380643

Analyte	Sample Result	Sample Qualifier	Spike Added	MSD Result	MSD Qualifier	Unit	D	%Rec	%Rec. Limits	RPD	RPD Limit
Ammonia as N	0.10	U	1.00	1.05		mg/L		105	90 - 110	0	30

Lab Sample ID: 680-111904-F-1 DU — **Client Sample ID: Duplicate**
Matrix: Water — **Prep Type: Total/NA**
Analysis Batch: 380643

Analyte	Sample Result	Sample Qualifier	DU Result	DU Qualifier	Unit	D	RPD	RPD Limit
Ammonia as N	1.2		1.17		mg/L		0.8	30

Method: 351.2 - Nitrogen, Total Kjeldahl

Lab Sample ID: MB 680-380733/1-A — **Client Sample ID: Method Blank**
Matrix: Water — **Prep Type: Total/NA**
Analysis Batch: 380963 — **Prep Batch: 380733**

Analyte	MB Result	MB Qualifier	PQL	MDL	Unit	D	Prepared	Analyzed	Dil Fac
Nitrogen, Kjeldahl	0.10	U	0.20	0.10	mg/L		04/29/15 09:07	04/30/15 09:35	1

Lab Sample ID: LCS 680-380733/2-A — **Client Sample ID: Lab Control Sample**
Matrix: Water — **Prep Type: Total/NA**
Analysis Batch: 380963 — **Prep Batch: 380733**

Analyte	Spike Added	LCS Result	LCS Qualifier	Unit	D	%Rec	%Rec. Limits
Nitrogen, Kjeldahl	2.00	2.11		mg/L		106	75 - 125

Lab Sample ID: 680-111904-H-1-B MS ^10 — **Client Sample ID: Matrix Spike**
Matrix: Water — **Prep Type: Total/NA**
Analysis Batch: 380963 — **Prep Batch: 380733**

Analyte	Sample Result	Sample Qualifier	Spike Added	MS Result	MS Qualifier	Unit	D	%Rec	%Rec. Limits
Nitrogen, Kjeldahl	12	J3	2.00	12.6	J3	mg/L		50	75 - 125

Lab Sample ID: 680-111904-H-1-C MSD ^10 — **Client Sample ID: Matrix Spike Duplicate**
Matrix: Water — **Prep Type: Total/NA**
Analysis Batch: 380963 — **Prep Batch: 380733**

Analyte	Sample Result	Sample Qualifier	Spike Added	MSD Result	MSD Qualifier	Unit	D	%Rec	%Rec. Limits	RPD	RPD Limit
Nitrogen, Kjeldahl	12	J3	2.00	13.9		mg/L		115	75 - 125	10	40

Lab Sample ID: 640-51021-H-2-B DU — **Client Sample ID: Duplicate**
Matrix: Water — **Prep Type: Total/NA**
Analysis Batch: 380963 — **Prep Batch: 380733**

Analyte	Sample Result	Sample Qualifier	DU Result	DU Qualifier	Unit	D	RPD	RPD Limit
Nitrogen, Kjeldahl	0.48		0.534		mg/L		11	40

Method: 353.2 - Nitrogen, Nitrate-Nitrite

Lab Sample ID: MB 680-380645/13 — **Client Sample ID: Method Blank**
Matrix: Water — **Prep Type: Total/NA**
Analysis Batch: 380645

Analyte	MB Result	MB Qualifier	PQL	MDL	Unit	D	Prepared	Analyzed	Dil Fac
Nitrate Nitrite as N	0.010	U	0.050	0.010	mg/L			04/28/15 13:37	1

Lab Sample ID: LCS 680-380645/15 — **Client Sample ID: Lab Control Sample**
Matrix: Water — **Prep Type: Total/NA**
Analysis Batch: 380645

Analyte	Spike Added	LCS Result	LCS Qualifier	Unit	D	%Rec	%Rec. Limits
Nitrate Nitrite as N	1.00	1.04		mg/L		104	90 - 110

Method: 353.2 - Nitrogen, Nitrate-Nitrite (Continued)

Lab Sample ID: LCSD 680-380645/16 — **Client Sample ID: Lab Control Sample Dup**
Matrix: Water — **Prep Type: Total/NA**
Analysis Batch: 380645

Analyte			Spike Added	LCSD Result	LCSD Qualifier	Unit	D	%Rec	%Rec. Limits	RPD	RPD Limit
Nitrate Nitrite as N			1.00	1.04		mg/L		104	90 - 110	0	10

Lab Sample ID: 640-51021-L-1 DU — **Client Sample ID: Duplicate**
Matrix: Water — **Prep Type: Total/NA**
Analysis Batch: 380645

Analyte	Sample Result	Sample Qualifier		DU Result	DU Qualifier	Unit	D			RPD	RPD Limit
Nitrate Nitrite as N	0.010	U		0.010	U	mg/L				NC	10

Method: 365.4 - Phosphorus, Total

Lab Sample ID: MB 680-380733/1-A — **Client Sample ID: Method Blank**
Matrix: Water — **Prep Type: Total/NA**
Analysis Batch: 380962 — **Prep Batch: 380733**

Analyte	MB Result	MB Qualifier	PQL	MDL	Unit	D	Prepared	Analyzed	Dil Fac
Phosphorus, Total	0.041	U	0.10	0.041	mg/L		04/29/15 09:07	04/30/15 09:35	1

Lab Sample ID: LCS 680-380733/2-A — **Client Sample ID: Lab Control Sample**
Matrix: Water — **Prep Type: Total/NA**
Analysis Batch: 380962 — **Prep Batch: 380733**

Analyte			Spike Added	LCS Result	LCS Qualifier	Unit	D	%Rec	%Rec. Limits		
Phosphorus, Total			2.00	1.99		mg/L		100	60 - 140		

Lab Sample ID: 680-111904-H-1-B MS — **Client Sample ID: Matrix Spike**
Matrix: Water — **Prep Type: Total/NA**
Analysis Batch: 380962 — **Prep Batch: 380733**

Analyte	Sample Result	Sample Qualifier	Spike Added	MS Result	MS Qualifier	Unit	D	%Rec	%Rec. Limits		
Phosphorus, Total	2.9		2.00	4.65		mg/L		86	60 - 140		

Lab Sample ID: 680-111904-H-1-C MSD — **Client Sample ID: Matrix Spike Duplicate**
Matrix: Water — **Prep Type: Total/NA**
Analysis Batch: 380962 — **Prep Batch: 380733**

Analyte	Sample Result	Sample Qualifier	Spike Added	MSD Result	MSD Qualifier	Unit	D	%Rec	%Rec. Limits	RPD	RPD Limit
Phosphorus, Total	2.9		2.00	4.96		mg/L		101	60 - 140	6	40

Lab Sample ID: 640-51021-H-2-B DU — **Client Sample ID: Duplicate**
Matrix: Water — **Prep Type: Total/NA**
Analysis Batch: 380962 — **Prep Batch: 380733**

Analyte	Sample Result	Sample Qualifier		DU Result	DU Qualifier	Unit	D			RPD	RPD Limit
Phosphorus, Total	0.041	U		0.041	U	mg/L				NC	40

Method: 4500 S2 F-2011 - Sulfide, Total

Lab Sample ID: MB 680-380545/1 — **Client Sample ID: Method Blank**
Matrix: Water — **Prep Type: Total/NA**
Analysis Batch: 380545

Analyte	MB Result	MB Qualifier	PQL	MDL	Unit	D	Prepared	Analyzed	Dil Fac
Total Sulfide	1.0	U	1.0	1.0	mg/L			04/28/15 10:16	1

Lab Sample ID: LCS 680-380545/2 — **Client Sample ID: Lab Control Sample**
Matrix: Water — **Prep Type: Total/NA**
Analysis Batch: 380545

Analyte	Spike Added	LCS Result	LCS Qualifier	Unit	D	%Rec	%Rec. Limits
Total Sulfide	10.0	11.8		mg/L		118	75 - 125

Lab Sample ID: LCSD 680-380545/3 — **Client Sample ID: Lab Control Sample Dup**
Matrix: Water — **Prep Type: Total/NA**
Analysis Batch: 380545

Analyte	Spike Added	LCSD Result	LCSD Qualifier	Unit	D	%Rec	%Rec. Limits	RPD	RPD Limit
Total Sulfide	10.0	11.6		mg/L		116	75 - 125	1	30

Lab Sample ID: 680-111940-H-26 DU — **Client Sample ID: Duplicate**
Matrix: Water — **Prep Type: Total/NA**
Analysis Batch: 380545

Analyte	Sample Result	Sample Qualifier	DU Result	DU Qualifier	Unit	D	RPD	RPD Limit
Total Sulfide	1.0	U	1.0	U	mg/L		NC	30

Method: 5310C-2000 - Total Organic Carbon/Persulfate - Ultrav

Lab Sample ID: MB 240-178540/4 — **Client Sample ID: Method Blank**
Matrix: Water — **Prep Type: Total/NA**
Analysis Batch: 178540

Analyte	MB Result	MB Qualifier	PQL	MDL	Unit	D	Prepared	Analyzed	Dil Fac
Total Organic Carbon	0.26	U	1.0	0.26	mg/L			04/29/15 09:41	1

Lab Sample ID: LCS 240-178540/6 — **Client Sample ID: Lab Control Sample**
Matrix: Water — **Prep Type: Total/NA**
Analysis Batch: 178540

Analyte	Spike Added	LCS Result	LCS Qualifier	Unit	D	%Rec	%Rec. Limits
Total Organic Carbon	45.3	47.7		mg/L		106	88 - 115

Lab Sample ID: LLCS 240-178540/5 — **Client Sample ID: Lab Control Sample**
Matrix: Water — **Prep Type: Total/NA**
Analysis Batch: 178540

Analyte	Spike Added	LLCS Result	LLCS Qualifier	Unit	D	%Rec	%Rec. Limits
Total Organic Carbon	5.38	5.58		mg/L		104	88 - 115

Method: 5310C-2000 - Total Organic Carbon/Persulfate - Ultrav (Continued)

Lab Sample ID: 660-66546-A-1 MS — **Client Sample ID: Matrix Spike**
Matrix: Water — **Prep Type: Total/NA**
Analysis Batch: 178540

Analyte	Sample Result	Sample Qualifier	Spike Added	MS Result	MS Qualifier	Unit	D	%Rec	%Rec. Limits		
Total Organic Carbon	0.66	I	25.0	27.7		mg/L		108	72 - 136		

Lab Sample ID: 660-66546-A-1 MSD — **Client Sample ID: Matrix Spike Duplicate**
Matrix: Water — **Prep Type: Total/NA**
Analysis Batch: 178540

Analyte	Sample Result	Sample Qualifier	Spike Added	MSD Result	MSD Qualifier	Unit	D	%Rec	%Rec. Limits	RPD	RPD Limit
Total Organic Carbon	0.66	I	25.0	27.4		mg/L		107	72 - 136	1	20

Method: SM 2120B - Color, Colorimetric

Lab Sample ID: MB 660-157437/4 — **Client Sample ID: Method Blank**
Matrix: Water — **Prep Type: Total/NA**
Analysis Batch: 157437

Analyte	MB Result	MB Qualifier	PQL	MDL	Unit	D	Prepared	Analyzed	Dil Fac
Color	5.0	U	5.0	5.0	PCU			04/24/15 12:15	1
pH at time of analysis	6.57		1.0	1.0	SU			04/24/15 12:15	1

Lab Sample ID: LCS 660-157437/5 — **Client Sample ID: Lab Control Sample**
Matrix: Water — **Prep Type: Total/NA**
Analysis Batch: 157437

Analyte			Spike Added	LCS Result	LCS Qualifier	Unit	D	%Rec	%Rec. Limits		
Color			30.0	30.0		PCU		100	90 - 110		

Lab Sample ID: 660-66541-1 DU — **Client Sample ID: Lake Monroe Boat Ramp**
Matrix: Water — **Prep Type: Total/NA**
Analysis Batch: 157437

Analyte	Sample Result	Sample Qualifier		DU Result	DU Qualifier	Unit	D			RPD	RPD Limit
Color	150			150		PCU				0	20
pH at time of analysis	7.7			7.73		SU				0.1	

Method: SM 2130B - Turbidity

Lab Sample ID: MB 660-157441/2 — **Client Sample ID: Method Blank**
Matrix: Water — **Prep Type: Total/NA**
Analysis Batch: 157441

Analyte	MB Result	MB Qualifier	PQL	MDL	Unit	D	Prepared	Analyzed	Dil Fac
Turbidity	0.50	U	0.50	0.50	NTU			04/24/15 11:50	1

Lab Sample ID: LCS 660-157441/3 — **Client Sample ID: Lab Control Sample**
Matrix: Water — **Prep Type: Total/NA**
Analysis Batch: 157441

Analyte			Spike Added	LCS Result	LCS Qualifier	Unit	D	%Rec	%Rec. Limits		
Turbidity			40.0	38.3		NTU		96	90 - 110		

Method: SM 2130B - Turbidity (Continued)

Lab Sample ID: LCSD 660-157441/6 — **Client Sample ID: Lab Control Sample Dup**
Matrix: Water — **Prep Type: Total/NA**
Analysis Batch: 157441

Analyte			Spike Added	LCSD Result	LCSD Qualifier	Unit	D	%Rec	%Rec. Limits	RPD	RPD Limit
Turbidity			40.0	39.0		NTU		98	90 - 110	2	20

Lab Sample ID: 660-66525-A-1 DU — **Client Sample ID: Duplicate**
Matrix: Water — **Prep Type: Total/NA**
Analysis Batch: 157441

Analyte	Sample Result	Sample Qualifier		DU Result	DU Qualifier	Unit	D			RPD	RPD Limit
Turbidity	6.7			6.63		NTU				0.6	20

Method: SM 2320B - Alkalinity

Lab Sample ID: MB 660-157478/1 — **Client Sample ID: Method Blank**
Matrix: Water — **Prep Type: Total/NA**
Analysis Batch: 157478

Analyte	MB Result	MB Qualifier	PQL	MDL	Unit	D	Prepared	Analyzed	Dil Fac
Alkalinity as CaCO3	1.0	U	1.0	1.0	mg/L			04/27/15 07:25	1

Lab Sample ID: LCS 660-157478/3 — **Client Sample ID: Lab Control Sample**
Matrix: Water — **Prep Type: Total/NA**
Analysis Batch: 157478

Analyte			Spike Added	LCS Result	LCS Qualifier	Unit	D	%Rec	%Rec. Limits		
Alkalinity as CaCO3			118	122		mg/L		103	90 - 110		

Lab Sample ID: 660-66541-1 DU — **Client Sample ID: Lake Monroe Boat Ramp**
Matrix: Water — **Prep Type: Total/NA**
Analysis Batch: 157478

Analyte	Sample Result	Sample Qualifier		DU Result	DU Qualifier	Unit	D			RPD	RPD Limit
Alkalinity as CaCO3	79			80.5		mg/L				2	30

Method: SM 2540C - Solids, Total Dissolved (TDS)

Lab Sample ID: MB 660-157484/1 — **Client Sample ID: Method Blank**
Matrix: Water — **Prep Type: Total/NA**
Analysis Batch: 157484

Analyte	MB Result	MB Qualifier	PQL	MDL	Unit	D	Prepared	Analyzed	Dil Fac
Total Dissolved Solids	5.0	U	5.0	5.0	mg/L			04/27/15 15:33	1

Lab Sample ID: LCS 660-157484/2 — **Client Sample ID: Lab Control Sample**
Matrix: Water — **Prep Type: Total/NA**
Analysis Batch: 157484

Analyte			Spike Added	LCS Result	LCS Qualifier	Unit	D	%Rec	%Rec. Limits		
Total Dissolved Solids			10000	9470		mg/L		95	80 - 120		

Method: SM 2540C - Solids, Total Dissolved (TDS) (Continued)

Lab Sample ID: 660-66525-A-7 DU — **Client Sample ID: Duplicate**
Matrix: Water — **Prep Type: Total/NA**
Analysis Batch: 157484

Analyte	Sample Result	Sample Qualifier		DU Result	DU Qualifier	Unit	D			RPD	RPD Limit
Total Dissolved Solids	320			322		mg/L				2	20

Method: SM 2540D - Solids, Total Suspended (TSS)

Lab Sample ID: MB 660-157508/1 — **Client Sample ID: Method Blank**
Matrix: Water — **Prep Type: Total/NA**
Analysis Batch: 157508

Analyte	MB Result	MB Qualifier	PQL	MDL	Unit	D	Prepared	Analyzed	Dil Fac
Total Suspended Solids	5.0	U	5.0	5.0	mg/L			04/28/15 11:03	1

Lab Sample ID: LCS 660-157508/2 — **Client Sample ID: Lab Control Sample**
Matrix: Water — **Prep Type: Total/NA**
Analysis Batch: 157508

Analyte			Spike Added	LCS Result	LCS Qualifier	Unit	D	%Rec	%Rec. Limits		
Total Suspended Solids			100	93.2		mg/L		93	80 - 120		

Lab Sample ID: 640-51007-A-1 DU — **Client Sample ID: Duplicate**
Matrix: Water — **Prep Type: Total/NA**
Analysis Batch: 157508

Analyte	Sample Result	Sample Qualifier		DU Result	DU Qualifier	Unit	D			RPD	RPD Limit
Total Suspended Solids	620			664		mg/L				7	20

Method: SM 4500 H+ B - pH

Lab Sample ID: LCS 660-157436/1 — **Client Sample ID: Lab Control Sample**
Matrix: Water — **Prep Type: Total/NA**
Analysis Batch: 157436

Analyte			Spike Added	LCS Result	LCS Qualifier	Unit	D	%Rec	%Rec. Limits		
pH			6.00	6.010		SU		100	98 - 102		

Lab Sample ID: 660-66536-K-1 DU — **Client Sample ID: Duplicate**
Matrix: Water — **Prep Type: Total/NA**
Analysis Batch: 157436

Analyte	Sample Result	Sample Qualifier		DU Result	DU Qualifier	Unit	D			RPD	RPD Limit
pH	5.65			5.640		SU				0.2	20

QC Sample Results

Client: Tetra Tech, Inc.
Project/Site: Lake Monroe

TestAmerica Job ID: 660-66541-1

Method: SM 4500 P E - Orthophosphate

Lab Sample ID: MB 660-157442/4
Matrix: Water
Analysis Batch: 157442

Client Sample ID: Method Blank
Prep Type: Total/NA

Analyte	MB Result	MB Qualifier	PQL	MDL	Unit	D	Prepared	Analyzed	Dil Fac
Orthophosphate	0.0050	U	0.010	0.0050	mg/L			04/24/15 11:25	1

Lab Sample ID: LCS 660-157442/5
Matrix: Water
Analysis Batch: 157442

Client Sample ID: Lab Control Sample
Prep Type: Total/NA

Analyte			Spike Added	LCS Result	LCS Qualifier	Unit	D	%Rec	%Rec. Limits		
Orthophosphate			0.300	0.328		mg/L		109	90 - 110		

Lab Sample ID: 660-66541-1 MS
Matrix: Water
Analysis Batch: 157442

Client Sample ID: Lake Monroe Boat Ramp
Prep Type: Dissolved

Analyte	Sample Result	Sample Qualifier	Spike Added	MS Result	MS Qualifier	Unit	D	%Rec	%Rec. Limits		
Orthophosphate	0.027		0.300	0.349		mg/L		107	90 - 110		

Lab Sample ID: 660-66541-1 MSD
Matrix: Water
Analysis Batch: 157442

Client Sample ID: Lake Monroe Boat Ramp
Prep Type: Dissolved

Analyte	Sample Result	Sample Qualifier	Spike Added	MSD Result	MSD Qualifier	Unit	D	%Rec	%Rec. Limits	RPD	RPD Limit
Orthophosphate	0.027		0.300	0.347		mg/L		107	90 - 110	1	30

QC Association Summary

Client: Tetra Tech, Inc.
Project/Site: Lake Monroe

TestAmerica Job ID: 660-66541-1

HPLC/IC

Analysis Batch: 380693

Lab Sample ID	Client Sample ID	Prep Type	Matrix	Method	Prep Batch
660-66538-B-1 MS	Matrix Spike	Total/NA	Water	300.0	
660-66538-B-1 MSD	Matrix Spike Duplicate	Total/NA	Water	300.0	
660-66541-1	Lake Monroe Boat Ramp	Total/NA	Water	300.0	
660-66541-1	Lake Monroe Boat Ramp	Total/NA	Water	300.0	
LCS 680-380693/3	Lab Control Sample	Total/NA	Water	300.0	
LCSD 680-380693/4	Lab Control Sample Dup	Total/NA	Water	300.0	
MB 680-380693/2	Method Blank	Total/NA	Water	300.0	

Metals

Prep Batch: 157491

Lab Sample ID	Client Sample ID	Prep Type	Matrix	Method	Prep Batch
660-66508-H-6-B MS	Matrix Spike	Dissolved	Water	3005A	
660-66508-H-6-C MSD	Matrix Spike Duplicate	Dissolved	Water	3005A	
660-66541-1	Lake Monroe Boat Ramp	Total Recoverable	Water	3005A	
LCS 660-157491/2-A	Lab Control Sample	Total Recoverable	Water	3005A	
MB 660-157491/1-A	Method Blank	Total Recoverable	Water	3005A	

Analysis Batch: 157498

Lab Sample ID	Client Sample ID	Prep Type	Matrix	Method	Prep Batch
660-66508-H-6-B MS	Matrix Spike	Dissolved	Water	6010B	157491
660-66508-H-6-C MSD	Matrix Spike Duplicate	Dissolved	Water	6010B	157491
660-66541-1	Lake Monroe Boat Ramp	Total Recoverable	Water	6010B	157491
LCS 660-157491/2-A	Lab Control Sample	Total Recoverable	Water	6010B	157491
MB 660-157491/1-A	Method Blank	Total Recoverable	Water	6010B	157491

Prep Batch: 157550

Lab Sample ID	Client Sample ID	Prep Type	Matrix	Method	Prep Batch
660-66541-1	Lake Monroe Boat Ramp	Total/NA	Water	7470A	
660-66541-1 MS	Lake Monroe Boat Ramp	Total/NA	Water	7470A	
660-66541-1 MSD	Lake Monroe Boat Ramp	Total/NA	Water	7470A	
LCS 660-157550/14-A	Lab Control Sample	Total/NA	Water	7470A	
MB 660-157550/13-A	Method Blank	Total/NA	Water	7470A	

Analysis Batch: 157554

Lab Sample ID	Client Sample ID	Prep Type	Matrix	Method	Prep Batch
660-66541-1	Lake Monroe Boat Ramp	Total/NA	Water	7470A	157550
660-66541-1 MS	Lake Monroe Boat Ramp	Total/NA	Water	7470A	157550
660-66541-1 MSD	Lake Monroe Boat Ramp	Total/NA	Water	7470A	157550
LCS 660-157550/14-A	Lab Control Sample	Total/NA	Water	7470A	157550
MB 660-157550/13-A	Method Blank	Total/NA	Water	7470A	157550

General Chemistry

Analysis Batch: 157436

Lab Sample ID	Client Sample ID	Prep Type	Matrix	Method	Prep Batch
660-66536-K-1 DU	Duplicate	Total/NA	Water	SM 4500 H+ B	
660-66541-1	Lake Monroe Boat Ramp	Total/NA	Water	SM 4500 H+ B	
LCS 660-157436/1	Lab Control Sample	Total/NA	Water	SM 4500 H+ B	

General Chemistry (Continued)

Analysis Batch: 157437

Lab Sample ID	Client Sample ID	Prep Type	Matrix	Method	Prep Batch
660-66541-1	Lake Monroe Boat Ramp	Total/NA	Water	SM 2120B	
660-66541-1 DU	Lake Monroe Boat Ramp	Total/NA	Water	SM 2120B	
LCS 660-157437/5	Lab Control Sample	Total/NA	Water	SM 2120B	
MB 660-157437/4	Method Blank	Total/NA	Water	SM 2120B	

Analysis Batch: 157441

Lab Sample ID	Client Sample ID	Prep Type	Matrix	Method	Prep Batch
660-66525-A-1 DU	Duplicate	Total/NA	Water	SM 2130B	
660-66541-1	Lake Monroe Boat Ramp	Total/NA	Water	SM 2130B	
LCS 660-157441/3	Lab Control Sample	Total/NA	Water	SM 2130B	
LCSD 660-157441/6	Lab Control Sample Dup	Total/NA	Water	SM 2130B	
MB 660-157441/2	Method Blank	Total/NA	Water	SM 2130B	

Analysis Batch: 157442

Lab Sample ID	Client Sample ID	Prep Type	Matrix	Method	Prep Batch
660-66541-1	Lake Monroe Boat Ramp	Dissolved	Water	SM 4500 P E	
660-66541-1 MS	Lake Monroe Boat Ramp	Dissolved	Water	SM 4500 P E	
660-66541-1 MSD	Lake Monroe Boat Ramp	Dissolved	Water	SM 4500 P E	
LCS 660-157442/5	Lab Control Sample	Total/NA	Water	SM 4500 P E	
MB 660-157442/4	Method Blank	Total/NA	Water	SM 4500 P E	

Analysis Batch: 157478

Lab Sample ID	Client Sample ID	Prep Type	Matrix	Method	Prep Batch
660-66541-1	Lake Monroe Boat Ramp	Total/NA	Water	SM 2320B	
660-66541-1 DU	Lake Monroe Boat Ramp	Total/NA	Water	SM 2320B	
LCS 660-157478/3	Lab Control Sample	Total/NA	Water	SM 2320B	
MB 660-157478/1	Method Blank	Total/NA	Water	SM 2320B	

Analysis Batch: 157484

Lab Sample ID	Client Sample ID	Prep Type	Matrix	Method	Prep Batch
660-66525-A-7 DU	Duplicate	Total/NA	Water	SM 2540C	
660-66541-1	Lake Monroe Boat Ramp	Total/NA	Water	SM 2540C	
LCS 660-157484/2	Lab Control Sample	Total/NA	Water	SM 2540C	
MB 660-157484/1	Method Blank	Total/NA	Water	SM 2540C	

Analysis Batch: 157508

Lab Sample ID	Client Sample ID	Prep Type	Matrix	Method	Prep Batch
640-51007-A-1 DU	Duplicate	Total/NA	Water	SM 2540D	
660-66541-1	Lake Monroe Boat Ramp	Total/NA	Water	SM 2540D	
LCS 660-157508/2	Lab Control Sample	Total/NA	Water	SM 2540D	
MB 660-157508/1	Method Blank	Total/NA	Water	SM 2540D	

Analysis Batch: 178540

Lab Sample ID	Client Sample ID	Prep Type	Matrix	Method	Prep Batch
660-66541-1	Lake Monroe Boat Ramp	Total/NA	Water	5310C-2000	
660-66546-A-1 MS	Matrix Spike	Total/NA	Water	5310C-2000	
660-66546-A-1 MSD	Matrix Spike Duplicate	Total/NA	Water	5310C-2000	
LCS 240-178540/6	Lab Control Sample	Total/NA	Water	5310C-2000	
LLCS 240-178540/5	Lab Control Sample	Total/NA	Water	5310C-2000	
MB 240-178540/4	Method Blank	Total/NA	Water	5310C-2000	

General Chemistry (Continued)

Analysis Batch: 380545

Lab Sample ID	Client Sample ID	Prep Type	Matrix	Method	Prep Batch
660-66541-1	Lake Monroe Boat Ramp	Total/NA	Water	4500 S2 F-2011	
680-111940-H-26 DU	Duplicate	Total/NA	Water	4500 S2 F-2011	
LCS 680-380545/2	Lab Control Sample	Total/NA	Water	4500 S2 F-2011	
LCSD 680-380545/3	Lab Control Sample Dup	Total/NA	Water	4500 S2 F-2011	
MB 680-380545/1	Method Blank	Total/NA	Water	4500 S2 F-2011	

Analysis Batch: 380632

Lab Sample ID	Client Sample ID	Prep Type	Matrix	Method	Prep Batch
660-66541-1	Lake Monroe Boat Ramp	Total/NA	Water	Total Nitrogen	

Analysis Batch: 380643

Lab Sample ID	Client Sample ID	Prep Type	Matrix	Method	Prep Batch
640-51008-C-4 MS	Matrix Spike	Total/NA	Water	350.1	
640-51008-C-4 MSD	Matrix Spike Duplicate	Total/NA	Water	350.1	
660-66541-1	Lake Monroe Boat Ramp	Total/NA	Water	350.1	
680-111904-F-1 DU	Duplicate	Total/NA	Water	350.1	
LCS 680-380643/13	Lab Control Sample	Total/NA	Water	350.1	
MB 680-380643/2	Method Blank	Total/NA	Water	350.1	

Analysis Batch: 380645

Lab Sample ID	Client Sample ID	Prep Type	Matrix	Method	Prep Batch
640-51021-L-1 DU	Duplicate	Total/NA	Water	353.2	
660-66541-1	Lake Monroe Boat Ramp	Total/NA	Water	353.2	
LCS 680-380645/15	Lab Control Sample	Total/NA	Water	353.2	
LCSD 680-380645/16	Lab Control Sample Dup	Total/NA	Water	353.2	
MB 680-380645/13	Method Blank	Total/NA	Water	353.2	

Prep Batch: 380733

Lab Sample ID	Client Sample ID	Prep Type	Matrix	Method	Prep Batch
640-51021-H-2-B DU	Duplicate	Total/NA	Water	Digestion	
660-66541-1	Lake Monroe Boat Ramp	Total/NA	Water	Digestion	
680-111904-H-1-B MS	Matrix Spike	Total/NA	Water	Digestion	
680-111904-H-1-B MS ^10	Matrix Spike	Total/NA	Water	Digestion	
680-111904-H-1-C MSD	Matrix Spike Duplicate	Total/NA	Water	Digestion	
680-111904-H-1-C MSD ^10	Matrix Spike Duplicate	Total/NA	Water	Digestion	
LCS 680-380733/2-A	Lab Control Sample	Total/NA	Water	Digestion	
MB 680-380733/1-A	Method Blank	Total/NA	Water	Digestion	

Analysis Batch: 380962

Lab Sample ID	Client Sample ID	Prep Type	Matrix	Method	Prep Batch
640-51021-H-2-B DU	Duplicate	Total/NA	Water	365.4	380733
660-66541-1	Lake Monroe Boat Ramp	Total/NA	Water	365.4	380733
680-111904-H-1-B MS	Matrix Spike	Total/NA	Water	365.4	380733
680-111904-H-1-C MSD	Matrix Spike Duplicate	Total/NA	Water	365.4	380733
LCS 680-380733/2-A	Lab Control Sample	Total/NA	Water	365.4	380733
MB 680-380733/1-A	Method Blank	Total/NA	Water	365.4	380733

Analysis Batch: 380963

Lab Sample ID	Client Sample ID	Prep Type	Matrix	Method	Prep Batch
640-51021-H-2-B DU	Duplicate	Total/NA	Water	351.2	380733
660-66541-1	Lake Monroe Boat Ramp	Total/NA	Water	351.2	380733

General Chemistry (Continued)

Analysis Batch: 380963 (Continued)

Lab Sample ID	Client Sample ID	Prep Type	Matrix	Method	Prep Batch
680-111904-H-1-B MS ^10	Matrix Spike	Total/NA	Water	351.2	380733
680-111904-H-1-C MSD ^10	Matrix Spike Duplicate	Total/NA	Water	351.2	380733
LCS 680-380733/2-A	Lab Control Sample	Total/NA	Water	351.2	380733
MB 680-380733/1-A	Method Blank	Total/NA	Water	351.2	380733

Lab Chronicle

Client: Tetra Tech, Inc.
Project/Site: Lake Monroe

TestAmerica Job ID: 660-66541-1

Client Sample ID: Lake Monroe Boat Ramp

Lab Sample ID: 660-66541-1

Date Collected: 04/23/15 11:00

Matrix: Water

Date Received: 04/24/15 08:25

Prep Type	Batch Type	Batch Method	Run	Dilution Factor	Batch Number	Prepared or Analyzed	Analyst	Lab
Total/NA	Analysis	300.0		2	380693	04/28/15 15:48	AJO	TAL SAV
Total/NA	Analysis	300.0		10	380693	04/28/15 16:19	AJO	TAL SAV
Total Recoverable	Prep	3005A			157491	04/28/15 08:00	GAF	TAL TAM
Total Recoverable	Analysis	6010B		1	157498	04/28/15 14:25	GAF	TAL TAM
Total/NA	Prep	7470A			157550	04/29/15 14:20	GH1	TAL TAM
Total/NA	Analysis	7470A		1	157554	04/29/15 17:31	GH1	TAL TAM
Total/NA	Analysis	350.1		1	380643	04/28/15 11:08	JME	TAL SAV
Total/NA	Prep	Digestion			380733	04/29/15 09:07	JRJ	TAL SAV
Total/NA	Analysis	351.2		1	380963	04/30/15 09:44	JER	TAL SAV
Total/NA	Analysis	353.2		1	380645	04/28/15 14:13	GRX	TAL SAV
Total/NA	Prep	Digestion			380733	04/29/15 09:07	JRJ	TAL SAV
Total/NA	Analysis	365.4		1	380962	04/30/15 09:44	JER	TAL SAV
Total/NA	Analysis	4500 S2 F-2011		1	380545	04/28/15 10:16	JRJ	TAL SAV
Total/NA	Analysis	5310C-2000		1	178540	04/29/15 11:05	TPH	TAL CAN
Total/NA	Analysis	SM 2120B		10	157437	04/24/15 12:15	AJG	TAL TAM
Total/NA	Analysis	SM 2130B		1	157441	04/24/15 11:50	ELE	TAL TAM
Total/NA	Analysis	SM 2320B		1	157478	04/27/15 07:25	AJG	TAL TAM
Total/NA	Analysis	SM 2540C		1	157484	04/27/15 15:33	SC1	TAL TAM
Total/NA	Analysis	SM 2540D		1	157508	04/28/15 11:03	SC1	TAL TAM
Total/NA	Analysis	SM 4500 H+ B		1	157436	04/24/15 11:40	AJG	TAL TAM
Dissolved	Analysis	SM 4500 P E		1	157442	04/24/15 11:25	ELE	TAL TAM
Total/NA	Analysis	Total Nitrogen		1	380632	04/28/15 14:03	JER	TAL SAV

Laboratory References:

ENCO = ENCO-Orlando, 10775 Central Port Drive, Orlando, FL 32824, TEL (407)826-5314

TAL CAN = TestAmerica Canton, 4101 Shuffel Street NW, North Canton, OH 44720, TEL (330)497-9396

TAL SAV = TestAmerica Savannah, 5102 LaRoche Avenue, Savannah, GA 31404, TEL (912)354-7858

TAL TAM = TestAmerica Tampa, 6712 Benjamin Road, Suite 100, Tampa, FL 33634, TEL (813)885-7427

Method Summary

Client: Tetra Tech, Inc.
Project/Site: Lake Monroe

TestAmerica Job ID: 660-66541-1

Method	Method Description	Protocol	Laboratory
300.0	Anions, Ion Chromatography	MCAWW	TAL SAV
6010B	Metals (ICP)	SW846	TAL TAM
7470A	Mercury (CVAA)	SW846	TAL TAM
350.1	Nitrogen, Ammonia	MCAWW	TAL SAV
351.2	Nitrogen, Total Kjeldahl	MCAWW	TAL SAV
353.2	Nitrogen, Nitrate-Nitrite	MCAWW	TAL SAV
365.4	Phosphorus, Total	EPA	TAL SAV
4500 S2 F-2011	Sulfide, Total	SM	TAL SAV
5310C-2000	Total Organic Carbon/Persulfate - Ultrav	SM	TAL CAN
SM 2120B	Color, Colorimetric	SM	TAL TAM
SM 2130B	Turbidity	SM	TAL TAM
SM 2320B	Alkalinity	SM	TAL TAM
SM 2540C	Solids, Total Dissolved (TDS)	SM	TAL TAM
SM 2540D	Solids, Total Suspended (TSS)	SM	TAL TAM
SM 4500 H+ B	pH	SM	TAL TAM
SM 4500 P E	Orthophosphate	SM	TAL TAM
Total Nitrogen	Nitrogen, Total	EPA	TAL SAV
Chlorophyll A ug/L	Chlorophyll A	NONE	ENCO
Fecal Coliform	SM 9222D Fecal Coliform by MF	NONE	ENCO

Protocol References:

EPA = US Environmental Protection Agency

MCAWW = "Methods For Chemical Analysis Of Water And Wastes", EPA-600/4-79-020, March 1983 And Subsequent Revisions.

NONE = NONE

SM = "Standard Methods For The Examination Of Water And Wastewater",

SW846 = "Test Methods For Evaluating Solid Waste, Physical/Chemical Methods", Third Edition, November 1986 And Its Updates.

Laboratory References:

ENCO = ENCO-Orlando, 10775 Central Port Drive, Orlando, FL 32824, TEL (407)826-5314

TAL CAN = TestAmerica Canton, 4101 Shuffel Street NW, North Canton, OH 44720, TEL (330)497-9396

TAL SAV = TestAmerica Savannah, 5102 LaRoche Avenue, Savannah, GA 31404, TEL (912)354-7858

TAL TAM = TestAmerica Tampa, 6712 Benjamin Road, Suite 100, Tampa, FL 33634, TEL (813)885-7427

Certification Summary

Client: Tetra Tech, Inc.
Project/Site: Lake Monroe

TestAmerica Job ID: 660-66541-1

Laboratory: TestAmerica Tampa

Unless otherwise noted, all analytes for this laboratory were covered under each certification below.

Authority	Program	EPA Region	Certification ID	Expiration Date
Florida	NELAP	4	E84282	06-30-15

The following analytes are included in this report, but are not certified under this certification:

Analysis Method	Prep Method	Matrix	Analyte
SM 2120B		Water	pH at time of analysis

Laboratory: TestAmerica Canton

All certifications held by this laboratory are listed. Not all certifications are applicable to this report.

Authority	Program	EPA Region	Certification ID	Expiration Date
California	NELAP	9	01144CA	06-30-14 *
California	State Program	9	2927	04-30-15 *
Connecticut	State Program	1	PH-0590	12-31-15
Florida	NELAP	4	E87225	06-30-15 *
Georgia	State Program	4	N/A	06-30-15 *
Illinois	NELAP	5	200004	07-31-15
Kansas	NELAP	7	E-10336	04-30-15 *
Kentucky (UST)	State Program	4	58	06-30-15 *
Kentucky (WW)	State Program	4	98016	12-31-15
L-A-B	DoD ELAP		L2315	07-18-16
Minnesota	NELAP	5	039-999-348	12-31-15
Nevada	State Program	9	OH-000482008A	07-31-15
New Jersey	NELAP	2	OH001	06-30-15 *
New York	NELAP	2	10975	03-31-16 *
Ohio VAP	State Program	5	CL0024	10-31-15
Oregon	NELAP	10	4062	02-23-16
Pennsylvania	NELAP	3	68-00340	08-31-15
Texas	NELAP	6		08-31-15
USDA	Federal		P330-13-00319	11-26-16
Virginia	NELAP	3	460175	09-14-15
Washington	State Program	10	C971	01-12-16
West Virginia DEP	State Program	3	210	12-31-15
Wisconsin	State Program	5	999518190	08-31-15

Laboratory: TestAmerica Savannah

Unless otherwise noted, all analytes for this laboratory were covered under each certification below.

Authority	Program	EPA Region	Certification ID	Expiration Date
Florida	NELAP	4	E87052	06-30-15

The following analytes are included in this report, but certification is not offered by the governing authority:

Analysis Method	Prep Method	Matrix	Analyte
Total Nitrogen		Water	Nitrogen, Total

* Certification renewal pending - certification considered valid.

ENCO Laboratories

Accurate. Timely. Responsive. Innovative.

10775 Central Port Drive
Orlando FL, 32824
Phone: 407.826.5314 FAX: 407.850.6945

Thursday, April 30, 2015
Test America - Tampa (TE022)
Attn: Nancy Robertson
6712 Benjamin Road, Suite 100
Tampa, FL 33634

RE: Laboratory Results for
Project Number: 660-66541, Project Name/Desc: Test America -
ENCO Workorder(s): A502500

Dear Nancy Robertson,

Enclosed is a copy of your laboratory report for test samples received by our laboratory on Thursday, April 23, 2015.

Unless otherwise noted in an attached project narrative, all samples were received in acceptable condition and processed in accordance with the referenced methods/procedures. Results for these procedures apply only to the samples as submitted.

The analytical results contained in this report are in compliance with NELAC standards, except as noted in the project narrative. This report shall not be reproduced except in full, without the written approval of the Laboratory.

This report contains only those analyses performed by Environmental Conservation Laboratories. Unless otherwise noted, all analyses were performed at ENCO Orlando. Data from outside organizations will be reported under separate cover.

If you have any questions or require further information, please do not hesitate to contact me.

Sincerely,

Ronald Wambles For David Camacho

Project Manager

Enclosure(s)

SAMPLE SUMMARY/LABORATORY CHRONICLE

Client ID: LK Monroe Boat Ramp **Lab ID:** A502500-01 **Sampled:** 04/23/15 11:00 **Received:** 04/23/15 15:49

Parameter	Hold Date/Time(s)				Prep Date/Time(s)		Analysis Date/Time(s)	
SM 10200H-2001	04/25/15	11:00	05/07/15		04/23/15	16:00	04/28/15	14:30
SM 9222D-1997	04/23/15	17:00	04/24/15	16:12	04/23/15	16:12	04/24/15	16:00

SAMPLE DETECTION SUMMARY

Client ID: LK Monroe Boat Ramp **Lab ID:** A502500-01

Analyte	Results	Flag	MDL	PQL	Units	Method	Notes
Chlorophyll a	8.5		0.50	0.50	mg/m3	SM 10200H-2001	
Coliform, Fecal	4		1	1	CFU/100 ml	SM 9222D-1997	

This report relates only to the sample as received by the laboratory, and may only be reproduced in full.

www.encolabs.com

ANALYTICAL RESULTS

Description:	LK Monroe Boat Ramp	**Lab Sample ID:**	A502500-01	**Received:**	04/23/15 15:49
Matrix:	Surface Water	**Sampled:**	04/23/15 11:00	**Work Order:**	A502500
Project:	Test America -	**Sampled By:**			

Classical Chemistry Parameters

^ - ENCO Orlando certified analyte [NELAC E83182]

Analyte [CAS Number]	Results	Flag	Units	DF	MDL	PQL	Batch	Method	Analyzed	By	Notes
Chlorophyll a [42617-16-3]^	**8.5**		mg/m3	1	0.50	0.50	5D23045	SM 10200H-2001	04/28/15 14:30	M1N	

Microbiological Parameters

^ - ENCO Orlando certified analyte [NELAC E83182]

Analyte [CAS Number]	Results	Flag	Units	DF	MDL	PQL	Batch	Method	Analyzed	By	Notes
Coliform, Fecal^	**4**		CFU/100 ml	1	1	1	5D23046	SM 9222D-1997	04/24/15 16:00	M1N	

QUALITY CONTROL DATA

Classical Chemistry Parameters - Quality Control

Batch 5D23045 - NO PREP

Blank (5D23045-BLK1) Prepared: 04/23/2015 16:00 Analyzed: 04/28/2015 14:30

Analyte	Result	Flag	POL	Units	Spike Level	Source Result	%REC	%REC Limits	RPD	RPD Limit	Notes
Chlorophyll a	0.50	U	0.50	mg/m3							

Duplicate (5D23045-DUP1) Prepared: 04/23/2015 16:00 Analyzed: 04/28/2015 14:30

Source: A502483-01

Analyte	Result	Flag	POL	Units	Spike Level	Source Result	%REC	%REC Limits	RPD	RPD Limit	Notes
Chlorophyll a	2.7		0.50	mg/m3		2.1			22	25	

Microbiological Parameters - Quality Control

Batch 5D23046 - NO PREP

Blank (5D23046-BLK1) Prepared: 04/23/2015 14:25 Analyzed: 04/24/2015 14:25

Analyte	Result	Flag	POL	Units	Spike Level	Source Result	%REC	%REC Limits	RPD	RPD Limit	Notes
Coliform, Fecal	**Absent**	**U**	1	CFU/100 ml							

Duplicate (5D23046-DUP1) Prepared: 04/23/2015 14:25 Analyzed: 04/24/2015 14:25

Source: A502482-01

Analyte	Result	Flag	POL	Units	Spike Level	Source Result	%REC	%REC Limits	RPD	RPD Limit	Notes
Coliform, Fecal	<1	U	1	CFU/100 ml		1 U				25	

FLAGS/NOTES AND DEFINITIONS

PQL	PQL: Practical Quantitation Limit.
B	Results are based upon membrane filter colony counts that are outside the method indicated ideal range.
I	The reported value is between the laboratory method detection limit (MDL) and the practical quantitation limit (PQL).
J	Estimated value.
K	Off-scale low; Actual value is known to be less than the value given.
L	Off-scale high; Actual value is known to be greater than value given.
M	Presence of analyte is verified but not quantified; the actual value is less than the MRL but greater than the MDL.
N	Presumptive evidence of presence of material.
O	Sampled, but analysis lost or not performed.
Q	Sample exceeded the accepted holding time.
T	Value reported is less than the laboratory method detection limit. The value is reported for informational purposes only and shall not be used in statistical analysis.
U	Indicates that the compound was analyzed for but not detected.
V	Indicates that the analyte was detected in both the sample and the associated method blank.
Y	The laboratory analysis was from an improperly preserved sample. The data may not be accurate.
Z	Too many colonies were present (TNTC); the numeric value represents the filtration volume.
?	Data are rejected and should not be used. Some or all of the quality control data for the analyte were outside criteria, and the presence or absence of the analyte cannot be determined from the data.
*****	Not reported due to interference.

TestAmerica Tampa
6712 Benjamin Road
Suite 100
Tampa, FL 33634
Phone: 813.885.7427 Fax:

Chain of Custody Record

024502

TestAmerica
THE LEADER IN ENVIRONMENTAL TESTING
TestAmerica Laboratories, Inc.
TAL-8210 (0713)

CONTACT Nancy Robertson (PM) For Log #

Regulatory Program: ☐ DW ☐ NPDES ☐ RCRA ☐ Other:

Client Contact	Project Manager: Nancy Robertson	Site Contact:	Date:	COC No:
Company Name: ENCO	Tel/Fax:	Lab Contact:	Carrier:	____ of ____ COCs
Address:	Analysis Turnaround Time			Sampler:
City/State/Zip: Orlando	☐ CALENDAR DAYS ☐ WORKING DAYS			For Lab Use Only:
Phone:	TAT if different from Below ____			Walk-in Client:
Fax:	☐ 2 weeks			Lab Sampling:
Project Name: LK Monroe	☐ 1 week			
Site:	☐ 2 days			Job / SDG No.:
66008532	☐ 1 day			

Sample Identification	Sample Date	Sample Time	Sample Type (C=Comp, G=Grab)	Matrix	# of Cont.	Filtered Sample (Y / N)	Perform MS / MSD (Y / N)	Fecal Coliform	CHL-A	Sample Specific Notes: A502500
LK Monroe Boat Ramp	4/23/15	1100	G	SW	4			X	X	

Preservation Used: 1= Ice, 2= HCl; 3= H2SO4; 4=HNO3; 5=NaOH; 6= Other ____

Possible Hazard Identification:
Are any samples from a listed EPA Hazardous Waste? Please List any EPA Waste Codes for the sample in the Comments Section if the lab is to dispose of the sample.
☐ Non-Hazard ☐ Flammable ☐ Skin Irritant ☐ Poison B ☐ Unknown

Sample Disposal (A fee may be assessed if samples are retained longer than 1 month)
☐ Return to Client ☐ Disposal by Lab ☐ Archive for ____ Months

Special Instructions/QC Requirements & Comments:

Custody Seals Intact: ☐ Yes ☐ No | Custody Seal No.: | Cooler Temp. (°C): Obs'd: ____ Corr'd: ____ | Therm ID No.: ____

Relinquished by:	Company:	Date/Time:	Received by:	Company:	Date/Time:
[signature]	TA Orlando	4/23/15 @ 1549	Brandy Hice	ENCO	4-23-15 1549
Relinquished by:	Company:	Date/Time:	Received by:	Company:	Date/Time:
Relinquished by:	Company:	Date/Time:	Received in Laboratory by:	Company:	Date/Time:

3.9°C

TestAmerica Tampa
6712 Benjamin Road Suite 100
Tampa, FL 33634
Phone (813) 885-7427 Fax (813) 885-7049

Chain of Custody Record

TestAmerica
THE LEADER IN ENVIRONMENTAL TESTING

Client Information	Sampler:	Lab PM: Robertson, Nancy	Carrier Tracking No(s):	COC No 660-62247-19983.1
Client Contact: Rasesh Shah	Phone: 407 - 839 - 3955	E-Mail: nancy.robertson@testamericainc.com		Page Page 1 of 1
Company: Tetra Tech, Inc.				Job #:
Address: 201 E. Pine St , Ste 1000	Due Date Requested:			
City: Orlando	TAT Requested (days):			
State, Zip: FL, 32801				
Phone:	PO #: Purchase Order Requested			
Email: rasesh.shah@tetratech.com	WO #:			
Project Name: Lake Monroe	Project #: 66008532			
Site:	SSOW#:			

Analysis Requested

Preservation Codes:
A - HCL, B - NaOH, C - Zn Acetate, D - Nitric Acid, E - NaHSO4, F - MeOH, G - Amchlor, H - Ascorbic Acid, I - Ice, J - DI Water, K - EDTA, L - EDA, M - Hexane, N - None, O - AsNaO2, P - Na2O4S, Q - Na2SO3, R - Na2S2SO3, S - H2SO4, T - TSP Dodecahydrate, U - Acetone, V - MCAA, W - ph 4-5, Z - other (specify)
Other:

Sample Identification	Sample Date	Sample Time	Sample Type (C=comp, G=grab)	Matrix (W=water, S=solid, O=waste/oil, BT=Tissue, A=Air)	Field Filtered Sample (Yes or No)	Perform MS/MSD (Yes or No)	2540C, 2540D	2320B, SM2130B, SM4500_H+	4500_P_E_Ortho - Orthophosphate	6010B, 7470A	2120B - Color	SUBCONTRACT - Chlorophyll A ug/L	9222D - Coliform, Fecal	300_ORGFM_28D - Chloride & Sulfate	350.1 - Ammonia as N	SM4500_S2_F - Total Sulfide	351.2, 353.2_Pres, 365.4, Nitrogen,Total	SM5310_TOC_B - Total Organic Carbon		Total Number of containers	Special Instructions/Note:
				Preservation Code:			N	N	N	D	N	N	R	N	S	CB	S	S			
Lake Monroe Boat Ramp	4/23/15	11:00	G	Water	N		X	X	X	X	X	X	X	X	X	X	X	X			
				Water																	

Loc: 660
66541

660-66541 Chain of Custody

Possible Hazard Identification
☐ Non-Hazard ☐ Flammable ☐ Skin Irritant ☐ Poison B ☐ Unknown ☐ Radiological

Sample Disposal (A fee may be assessed if samples are retained longer than 1 month)
☐ Return To Client ☐ Disposal By Lab ☐ Archive For _____ Months

Deliverable Requested. I, II, III, IV, Other (specify)

Special Instructions/QC Requirements:

Empty Kit Relinquished by:	Date: 4-17-15	Time: 12:50	Method of Shipment: Lab courier		
Relinquished by:	Date/Time: 4/23/15 3pm	Company TT	Received by:	Date/Time:	Company
Relinquished by:	Date/Time: 4/23/15	Company	Received by:	Date/Time: 4.24.15 0825	Company TA TPA
Relinquished by:	Date/Time:	Company	Received by:	Date/Time:	Company

Custody Seals Intact: Δ Yes Δ No
Custody Seal No.:
Cooler Temperature(s) °C and Other Remarks: 2.5 cbo 9

Login Sample Receipt Checklist

Client: Tetra Tech, Inc.

Job Number: 660-66541-1

Login Number: 66541
List Number: 1
Creator: Southers, Kristin B

List Source: TestAmerica Tampa

Question	Answer	Comment
Radioactivity wasn't checked or is </= background as measured by a survey meter.	N/A	
The cooler's custody seal, if present, is intact.	True	
Sample custody seals, if present, are intact.	True	
The cooler or samples do not appear to have been compromised or tampered with.	True	
Samples were received on ice.	True	
Cooler Temperature is acceptable.	True	
Cooler Temperature is recorded.	True	
COC is present.	True	
COC is filled out in ink and legible.	True	
COC is filled out with all pertinent information.	True	
Is the Field Sampler's name present on COC?	True	
There are no discrepancies between the containers received and the COC.	True	
Samples are received within Holding Time.	True	
Sample containers have legible labels.	True	
Containers are not broken or leaking.	True	
Sample collection date/times are provided.	True	
Appropriate sample containers are used.	True	
Sample bottles are completely filled.	True	
Sample Preservation Verified.	True	
There is sufficient vol. for all requested analyses, incl. any requested MS/MSDs	True	
Containers requiring zero headspace have no headspace or bubble is <6mm (1/4").	N/A	
Multiphasic samples are not present.	True	
Samples do not require splitting or compositing.	True	
Residual Chlorine Checked.	N/A	

Login Sample Receipt Checklist

Client: Tetra Tech, Inc.

Job Number: 660-66541-1

Login Number: 66541
List Number: 2
Creator: Banda, Christy S

List Source: TestAmerica Savannah
List Creation: 04/25/15 08:40 AM

Question	Answer	Comment
Radioactivity wasn't checked or is </= background as measured by a survey meter.	N/A	
The cooler's custody seal, if present, is intact.	True	
Sample custody seals, if present, are intact.	True	
The cooler or samples do not appear to have been compromised or tampered with.	True	
Samples were received on ice.	True	
Cooler Temperature is acceptable.	True	
Cooler Temperature is recorded.	True	
COC is present.	True	
COC is filled out in ink and legible.	True	
COC is filled out with all pertinent information.	True	
Is the Field Sampler's name present on COC?	N/A	
There are no discrepancies between the containers received and the COC.	True	
Samples are received within Holding Time.	True	
Sample containers have legible labels.	True	
Containers are not broken or leaking.	True	
Sample collection date/times are provided.	True	
Appropriate sample containers are used.	True	
Sample bottles are completely filled.	True	
Sample Preservation Verified.	N/A	
There is sufficient vol. for all requested analyses, incl. any requested MS/MSDs	True	
Containers requiring zero headspace have no headspace or bubble is <6mm (1/4").	N/A	
Multiphasic samples are not present.	True	
Samples do not require splitting or compositing.	True	
Residual Chlorine Checked.	N/A	

4. Lake Monroe Water Analytical Testing Report (05/06/2015)

TestAmerica

THE LEADER IN ENVIRONMENTAL TESTING

ANALYTICAL REPORT

TestAmerica Laboratories, Inc.
TestAmerica Tampa
6712 Benjamin Road
Suite 100
Tampa, FL 33634
Tel: (813)885-7427

TestAmerica Job ID: 660-66589-1
Client Project/Site: Lake Monroe

For:
Tetra Tech, Inc.
201 E. Pine St., Ste. 1000
Orlando, Florida 32801

Attn: Rasesh Shah

Authorized for release by:
5/6/2015 2:19:15 PM

Nancy Robertson, Project Manager II
(813)885-7427
nancy.robertson@testamericainc.com

LINKS

Review your project results through TotalAccess

Have a Question? Ask The Expert

Visit us at: www.testamericainc.com

The test results in this report meet all 2003 NELAC and 2009 TNI requirements for accredited parameters, exceptions are noted in this report. This report may not be reproduced except in full, and with written approval from the laboratory. For questions please contact the Project Manager at the e-mail address or telephone number listed on this page.

This report has been electronically signed and authorized by the signatory. Electronic signature is intended to be the legally binding equivalent of a traditionally handwritten signature.

Results relate only to the items tested and the sample(s) as received by the laboratory.

Table of Contents

Cover Page 1
Table of Contents 2
Sample Summary 3
Case Narrative 4
Definitions/Glossary 5
Detection Summary 6
Client Sample Results 7
QC Sample Results 8
QC Association Summary 18
Lab Chronicle 21
Method Summary 22
Certification Summary 23
Subcontract Data 24
Chain of Custody 31
Receipt Checklists 32

Sample Summary

Client: Tetra Tech, Inc.
Project/Site: Lake Monroe

TestAmerica Job ID: 660-66589-1

Lab Sample ID	Client Sample ID	Matrix	Collected	Received
660-66589-1	Lake Monroe Boat Ramp	Water	04/28/15 12:30	04/29/15 08:55

Case Narrative

Client: Tetra Tech, Inc.
Project/Site: Lake Monroe

TestAmerica Job ID: 660-66589-1

Job ID: 660-66589-1

Laboratory: TestAmerica Tampa

Narrative

Job Narrative
660-66589-1

Comments
No additional comments.

Receipt
The sample was received on 4/29/2015 8:55 AM; the sample arrived in good condition, properly preserved and, where required, on ice.
The temperature of the cooler at receipt was 1.3º C.

HPLC/IC
No analytical or quality issues were noted, other than those described in the Definitions/Glossary page.

Metals
No analytical or quality issues were noted, other than those described in the Definitions/Glossary page.

General Chemistry
Method SM 4500 H+ B: The method requested is normally performed in the field, and performing this method in the laboratory may produce biased results.

No additional analytical or quality issues were noted, other than those described above or in the Definitions/Glossary page.

Subcontract non-Sister
Chlorophyll A and Fecal Coliform subcontracted to ENCO.

Definitions/Glossary

Client: Tetra Tech, Inc.
Project/Site: Lake Monroe

TestAmerica Job ID: 660-66589-1

Qualifiers

HPLC/IC

Qualifier	Qualifier Description
U	Indicates that the compound was analyzed for but not detected.

Metals

Qualifier	Qualifier Description
U	Indicates that the compound was analyzed for but not detected.
I	The reported value is between the laboratory method detection limit and the laboratory practical quantitation limit.

General Chemistry

Qualifier	Qualifier Description
J3	Estimated value; value may not be accurate. Spike recovery or RPD outside of criteria.
Q	Sample held beyond the accepted holding time.
U	Indicates that the compound was analyzed for but not detected.
I	The reported value is between the laboratory method detection limit and the laboratory practical quantitation limit.

Glossary

Abbreviation	These commonly used abbreviations may or may not be present in this report.
¤	Listed under the "D" column to designate that the result is reported on a dry weight basis
%R	Percent Recovery
CFL	Contains Free Liquid
CNF	Contains no Free Liquid
DER	Duplicate error ratio (normalized absolute difference)
Dil Fac	Dilution Factor
DL, RA, RE, IN	Indicates a Dilution, Re-analysis, Re-extraction, or additional Initial metals/anion analysis of the sample
DLC	Decision level concentration
MDA	Minimum detectable activity
EDL	Estimated Detection Limit
MDC	Minimum detectable concentration
MDL	Method Detection Limit
ML	Minimum Level (Dioxin)
NC	Not Calculated
ND	Not detected at the reporting limit (or MDL or EDL if shown)
PQL	Practical Quantitation Limit
QC	Quality Control
RER	Relative error ratio
RL	Reporting Limit or Requested Limit (Radiochemistry)
RPD	Relative Percent Difference, a measure of the relative difference between two points
TEF	Toxicity Equivalent Factor (Dioxin)
TEQ	Toxicity Equivalent Quotient (Dioxin)

Detection Summary

Client: Tetra Tech, Inc.
Project/Site: Lake Monroe

TestAmerica Job ID: 660-66589-1

Client Sample ID: Lake Monroe Boat Ramp — Lab Sample ID: 660-66589-1

Analyte	Result	Qualifier	PQL	MDL	Unit	Dil Fac	D	Method	Prep Type
Sulfate	47		2.0	0.80	mg/L	2		300.0	Total/NA
Chloride	270		5.0	2.0	mg/L	10		300.0	Total/NA
Iron	0.19	I	0.20	0.050	mg/L	1		6010B	Total Recoverable
Manganese	0.022		0.0040	0.0010	mg/L	1		6010B	Total Recoverable
Nitrogen, Kjeldahl	1.9		0.20	0.10	mg/L	1		351.2	Total/NA
Phosphorus, Total	0.14		0.10	0.041	mg/L	1		365.4	Total/NA
Total Organic Carbon	20		1.0	0.080	mg/L	1		5310C-2000	Total/NA
Color	120		10	10	PCU	2		SM 2120B	Total/NA
pH at time of analysis	7.8		1.0	1.0	SU	2		SM 2120B	Total/NA
Turbidity	5.9		0.50	0.50	NTU	1		SM 2130B	Total/NA
Alkalinity as CaCO3	77		1.0	1.0	mg/L	1		SM 2320B	Total/NA
Total Dissolved Solids	610		5.0	5.0	mg/L	1		SM 2540C	Total/NA
Total Suspended Solids	16		2.5	2.5	mg/L	1		SM 2540D	Total/NA
pH	7.77	Q			SU	1		SM 4500 H+ B	Total/NA
Nitrogen, Total	1.9		0.25	0.25	mg/L	1		Total Nitrogen	Total/NA
Orthophosphate	0.043		0.010	0.0050	mg/L	1		SM 4500 P E	Dissolved

This Detection Summary does not include radiochemical test results.

Client Sample Results

Client: Tetra Tech, Inc.
Project/Site: Lake Monroe

TestAmerica Job ID: 660-66589-1

Client Sample ID: Lake Monroe Boat Ramp

Lab Sample ID: 660-66589-1

Date Collected: 04/28/15 12:30
Matrix: Water
Date Received: 04/29/15 08:55

Method: 300.0 - Anions, Ion Chromatography

Analyte	Result	Qualifier	PQL	MDL	Unit	D	Prepared	Analyzed	Dil Fac
Sulfate	47		2.0	0.80	mg/L			05/01/15 16:43	2
Chloride	270		5.0	2.0	mg/L			05/01/15 16:28	10

Method: 6010B - Metals (ICP) - Total Recoverable

Analyte	Result	Qualifier	PQL	MDL	Unit	D	Prepared	Analyzed	Dil Fac
Cadmium	0.0010	U	0.0040	0.0010	mg/L		04/29/15 12:30	04/30/15 08:45	1
Iron	0.19	I	0.20	0.050	mg/L		04/29/15 12:30	04/30/15 08:45	1
Manganese	0.022		0.0040	0.0010	mg/L		04/29/15 12:30	04/30/15 08:45	1
Nickel	0.0020	U	0.0080	0.0020	mg/L		04/29/15 12:30	04/30/15 08:45	1
Zinc	0.0050	U	0.020	0.0050	mg/L		04/29/15 12:30	04/30/15 08:45	1

Method: 7470A - Mercury (CVAA)

Analyte	Result	Qualifier	PQL	MDL	Unit	D	Prepared	Analyzed	Dil Fac
Mercury	0.072	U	0.20	0.072	ug/L		05/04/15 12:20	05/04/15 15:22	1

General Chemistry

Analyte	Result	Qualifier	PQL	MDL	Unit	D	Prepared	Analyzed	Dil Fac
Ammonia as N	0.10	U	0.25	0.10	mg/L			05/01/15 11:56	1
Nitrogen, Kjeldahl	1.9		0.20	0.10	mg/L		05/01/15 07:43	05/04/15 10:08	1
Nitrate Nitrite as N	0.010	U	0.050	0.010	mg/L			04/30/15 14:55	1
Phosphorus, Total	0.14		0.10	0.041	mg/L		05/01/15 07:43	05/04/15 10:08	1
Total Sulfide	1.0	U	1.0	1.0	mg/L			05/01/15 12:24	1
Total Organic Carbon	20		1.0	0.080	mg/L			05/01/15 10:58	1
Color	120		10	10	PCU			04/29/15 13:05	2
pH at time of analysis	7.8		1.0	1.0	SU			04/29/15 13:05	2
Turbidity	5.9		0.50	0.50	NTU			04/30/15 05:35	1
Alkalinity as CaCO3	77		1.0	1.0	mg/L			04/30/15 05:43	1
Total Dissolved Solids	610		5.0	5.0	mg/L			04/29/15 14:31	1
Total Suspended Solids	16		2.5	2.5	mg/L			04/29/15 10:34	1
pH	7.77	Q			SU			04/29/15 13:20	1
Nitrogen, Total	1.9		0.25	0.25	mg/L			04/30/15 13:00	1

General Chemistry - Dissolved

Analyte	Result	Qualifier	PQL	MDL	Unit	D	Prepared	Analyzed	Dil Fac
Orthophosphate	0.043		0.010	0.0050	mg/L			04/29/15 15:20	1

Method: 300.0 - Anions, Ion Chromatography

Lab Sample ID: MB 680-381122/2 — **Client Sample ID: Method Blank**
Matrix: Water — **Prep Type: Total/NA**
Analysis Batch: 381122

Analyte	MB Result	MB Qualifier	PQL	MDL	Unit	D	Prepared	Analyzed	Dil Fac
Sulfate	0.40	U	1.0	0.40	mg/L			05/01/15 11:23	1
Chloride	0.20	U	0.50	0.20	mg/L			05/01/15 11:23	1

Lab Sample ID: LCS 680-381122/3 — **Client Sample ID: Lab Control Sample**
Matrix: Water — **Prep Type: Total/NA**
Analysis Batch: 381122

Analyte	Spike Added	LCS Result	LCS Qualifier	Unit	D	%Rec	%Rec. Limits
Sulfate	10.0	10.6		mg/L		106	90 - 110
Chloride	10.0	10.2		mg/L		102	90 - 110

Lab Sample ID: LCSD 680-381122/4 — **Client Sample ID: Lab Control Sample Dup**
Matrix: Water — **Prep Type: Total/NA**
Analysis Batch: 381122

Analyte	Spike Added	LCSD Result	LCSD Qualifier	Unit	D	%Rec	%Rec. Limits	RPD	RPD Limit
Sulfate	10.0	10.6		mg/L		106	90 - 110	0	30
Chloride	10.0	10.2		mg/L		102	90 - 110	0	30

Lab Sample ID: 640-51048-A-6 MS — **Client Sample ID: Matrix Spike**
Matrix: Water — **Prep Type: Total/NA**
Analysis Batch: 381122

Analyte	Sample Result	Sample Qualifier	Spike Added	MS Result	MS Qualifier	Unit	D	%Rec	%Rec. Limits
Sulfate	510		200	712		mg/L		101	80 - 120
Chloride	120		200	327		mg/L		102	80 - 120

Lab Sample ID: 640-51048-A-6 MSD — **Client Sample ID: Matrix Spike Duplicate**
Matrix: Water — **Prep Type: Total/NA**
Analysis Batch: 381122

Analyte	Sample Result	Sample Qualifier	Spike Added	MSD Result	MSD Qualifier	Unit	D	%Rec	%Rec. Limits	RPD	RPD Limit
Sulfate	510		200	702		mg/L		96	80 - 120	1	30
Chloride	120		200	326		mg/L		101	80 - 120	1	30

Method: 6010B - Metals (ICP)

Lab Sample ID: MB 660-157544/1-A — **Client Sample ID: Method Blank**
Matrix: Water — **Prep Type: Total Recoverable**
Analysis Batch: 157566 — **Prep Batch: 157544**

Analyte	MB Result	MB Qualifier	PQL	MDL	Unit	D	Prepared	Analyzed	Dil Fac
Cadmium	0.0010	U	0.0040	0.0010	mg/L		04/29/15 12:30	04/30/15 08:03	1
Iron	0.050	U	0.20	0.050	mg/L		04/29/15 12:30	04/30/15 08:03	1
Manganese	0.0010	U	0.0040	0.0010	mg/L		04/29/15 12:30	04/30/15 08:03	1
Nickel	0.0020	U	0.0080	0.0020	mg/L		04/29/15 12:30	04/30/15 08:03	1
Zinc	0.0050	U	0.020	0.0050	mg/L		04/29/15 12:30	04/30/15 08:03	1

Method: 6010B - Metals (ICP) (Continued)

Lab Sample ID: LCS 660-157544/2-A — **Client Sample ID: Lab Control Sample**
Matrix: Water — **Prep Type: Total Recoverable**
Analysis Batch: 157566 — **Prep Batch: 157544**

Analyte	Spike Added	LCS Result	LCS Qualifier	Unit	D	%Rec	%Rec. Limits
Cadmium	1.00	0.981		mg/L		98	80 - 120
Iron	1.00	1.00		mg/L		100	80 - 120
Manganese	1.00	1.00		mg/L		100	80 - 120
Nickel	1.00	1.01		mg/L		101	80 - 120
Zinc	1.00	1.03		mg/L		103	80 - 120

Lab Sample ID: 660-66594-B-1-B MS — **Client Sample ID: Matrix Spike**
Matrix: Water — **Prep Type: Total Recoverable**
Analysis Batch: 157566 — **Prep Batch: 157544**

Analyte	Sample Result	Sample Qualifier	Spike Added	MS Result	MS Qualifier	Unit	D	%Rec	%Rec. Limits
Cadmium	0.0010	U	1.00	0.986		mg/L		99	80 - 120
Iron	1.3		1.00	2.31		mg/L		100	80 - 120
Manganese	0.018		1.00	1.01		mg/L		100	80 - 120
Nickel	0.015		1.00	1.00		mg/L		99	80 - 120
Zinc	0.021		1.00	1.06		mg/L		104	80 - 120

Lab Sample ID: 660-66594-B-1-C MSD — **Client Sample ID: Matrix Spike Duplicate**
Matrix: Water — **Prep Type: Total Recoverable**
Analysis Batch: 157566 — **Prep Batch: 157544**

Analyte	Sample Result	Sample Qualifier	Spike Added	MSD Result	MSD Qualifier	Unit	D	%Rec	%Rec. Limits	RPD	RPD Limit
Cadmium	0.0010	U	1.00	0.989		mg/L		99	80 - 120	0	20
Iron	1.3		1.00	2.35		mg/L		104	80 - 120	2	20
Manganese	0.018		1.00	1.01		mg/L		99	80 - 120	0	20
Nickel	0.015		1.00	1.00		mg/L		99	80 - 120	0	20
Zinc	0.021		1.00	1.07		mg/L		105	80 - 120	1	20

Method: 7470A - Mercury (CVAA)

Lab Sample ID: MB 660-157635/13-A — **Client Sample ID: Method Blank**
Matrix: Water — **Prep Type: Total/NA**
Analysis Batch: 157642 — **Prep Batch: 157635**

Analyte	MB Result	MB Qualifier	PQL	MDL	Unit	D	Prepared	Analyzed	Dil Fac
Mercury	0.072	U	0.20	0.072	ug/L		05/04/15 12:20	05/04/15 15:12	1

Lab Sample ID: LCS 660-157635/14-A — **Client Sample ID: Lab Control Sample**
Matrix: Water — **Prep Type: Total/NA**
Analysis Batch: 157642 — **Prep Batch: 157635**

Analyte	Spike Added	LCS Result	LCS Qualifier	Unit	D	%Rec	%Rec. Limits
Mercury	1.40	1.40		ug/L		100	80 - 120

Method: 7470A - Mercury (CVAA) (Continued)

Lab Sample ID: 660-66645-F-1-C MS — **Client Sample ID: Matrix Spike**
Matrix: Water — **Prep Type: Total/NA**
Analysis Batch: 157642 — **Prep Batch: 157635**

Analyte	Sample Result	Sample Qualifier	Spike Added	MS Result	MS Qualifier	Unit	D	%Rec	%Rec. Limits		
Mercury	0.072	U	1.40	1.41		ug/L		101	80 - 120		

Lab Sample ID: 660-66645-F-1-D MSD — **Client Sample ID: Matrix Spike Duplicate**
Matrix: Water — **Prep Type: Total/NA**
Analysis Batch: 157642 — **Prep Batch: 157635**

Analyte	Sample Result	Sample Qualifier	Spike Added	MSD Result	MSD Qualifier	Unit	D	%Rec	%Rec. Limits	RPD	RPD Limit
Mercury	0.072	U	1.40	1.43		ug/L		102	80 - 120	1	20

Method: 350.1 - Nitrogen, Ammonia

Lab Sample ID: MB 680-381171/11 — **Client Sample ID: Method Blank**
Matrix: Water — **Prep Type: Total/NA**
Analysis Batch: 381171

Analyte	MB Result	MB Qualifier	PQL	MDL	Unit	D	Prepared	Analyzed	Dil Fac
Ammonia as N	0.10	U	0.25	0.10	mg/L			05/01/15 11:56	1

Lab Sample ID: LCS 680-381171/1 — **Client Sample ID: Lab Control Sample**
Matrix: Water — **Prep Type: Total/NA**
Analysis Batch: 381171

Analyte			Spike Added	LCS Result	LCS Qualifier	Unit	D	%Rec	%Rec. Limits		
Ammonia as N			1.00	1.00		mg/L		100	90 - 110		

Lab Sample ID: 640-51048-A-5 MS — **Client Sample ID: Matrix Spike**
Matrix: Water — **Prep Type: Total/NA**
Analysis Batch: 381171

Analyte	Sample Result	Sample Qualifier	Spike Added	MS Result	MS Qualifier	Unit	D	%Rec	%Rec. Limits		
Ammonia as N	0.10	U	1.00	1.01		mg/L		101	90 - 110		

Lab Sample ID: 640-51048-A-5 MSD — **Client Sample ID: Matrix Spike Duplicate**
Matrix: Water — **Prep Type: Total/NA**
Analysis Batch: 381171

Analyte	Sample Result	Sample Qualifier	Spike Added	MSD Result	MSD Qualifier	Unit	D	%Rec	%Rec. Limits	RPD	RPD Limit
Ammonia as N	0.10	U	1.00	1.05		mg/L		105	90 - 110	4	30

Lab Sample ID: 680-112040-C-3 DU — **Client Sample ID: Duplicate**
Matrix: Water — **Prep Type: Total/NA**
Analysis Batch: 381171

Analyte	Sample Result	Sample Qualifier		DU Result	DU Qualifier	Unit	D			RPD	RPD Limit
Ammonia as N	0.18	I		0.165	I	mg/L				6	30

QC Sample Results

Client: Tetra Tech, Inc.
Project/Site: Lake Monroe

TestAmerica Job ID: 660-66589-1

Method: 351.2 - Nitrogen, Total Kjeldahl

Lab Sample ID: MB 680-381079/1-A — **Client Sample ID: Method Blank**
Matrix: Water — **Prep Type: Total/NA**
Analysis Batch: 381375 — **Prep Batch: 381079**

Analyte	MB Result	MB Qualifier	PQL	MDL	Unit	D	Prepared	Analyzed	Dil Fac
Nitrogen, Kjeldahl	0.10	U	0.20	0.10	mg/L		05/01/15 07:43	05/04/15 09:58	1

Lab Sample ID: LCS 680-381079/2-A — **Client Sample ID: Lab Control Sample**
Matrix: Water — **Prep Type: Total/NA**
Analysis Batch: 381375 — **Prep Batch: 381079**

Analyte	Spike Added	LCS Result	LCS Qualifier	Unit	D	%Rec	%Rec. Limits
Nitrogen, Kjeldahl	2.00	2.22		mg/L		111	75 - 125

Lab Sample ID: 660-66575-B-1-B MS ^10 — **Client Sample ID: Matrix Spike**
Matrix: Water — **Prep Type: Total/NA**
Analysis Batch: 381375 — **Prep Batch: 381079**

Analyte	Sample Result	Sample Qualifier	Spike Added	MS Result	MS Qualifier	Unit	D	%Rec	%Rec. Limits
Nitrogen, Kjeldahl	37	J3	2.00	43.5	J3	mg/L		340	75 - 125

Lab Sample ID: 660-66575-B-1-C MSD ^10 — **Client Sample ID: Matrix Spike Duplicate**
Matrix: Water — **Prep Type: Total/NA**
Analysis Batch: 381375 — **Prep Batch: 381079**

Analyte	Sample Result	Sample Qualifier	Spike Added	MSD Result	MSD Qualifier	Unit	D	%Rec	%Rec. Limits	RPD	RPD Limit
Nitrogen, Kjeldahl	37	J3	2.00	40.7	J3	mg/L		200	75 - 125	7	40

Lab Sample ID: 660-66575-B-2-B DU — **Client Sample ID: Duplicate**
Matrix: Water — **Prep Type: Total/NA**
Analysis Batch: 381375 — **Prep Batch: 381079**

Analyte	Sample Result	Sample Qualifier	DU Result	DU Qualifier	Unit	D	RPD	RPD Limit
Nitrogen, Kjeldahl	0.89		0.911		mg/L		2	40

Method: 353.2 - Nitrogen, Nitrate-Nitrite

Lab Sample ID: MB 680-381020/13 — **Client Sample ID: Method Blank**
Matrix: Water — **Prep Type: Total/NA**
Analysis Batch: 381020

Analyte	MB Result	MB Qualifier	PQL	MDL	Unit	D	Prepared	Analyzed	Dil Fac
Nitrate Nitrite as N	0.010	U	0.050	0.010	mg/L			04/30/15 13:37	1

Lab Sample ID: LCS 680-381020/15 — **Client Sample ID: Lab Control Sample**
Matrix: Water — **Prep Type: Total/NA**
Analysis Batch: 381020

Analyte	Spike Added	LCS Result	LCS Qualifier	Unit	D	%Rec	%Rec. Limits
Nitrate Nitrite as N	1.00	1.04		mg/L		104	90 - 110

Method: 353.2 - Nitrogen, Nitrate-Nitrite (Continued)

Lab Sample ID: 640-51047-A-5 MS ^50 — **Client Sample ID: Matrix Spike**
Matrix: Water — **Prep Type: Total/NA**
Analysis Batch: 381020

Analyte	Sample Result	Sample Qualifier	Spike Added	MS Result	MS Qualifier	Unit	D	%Rec	%Rec. Limits		
Nitrate Nitrite as N	30	J3	50.0	71.0	J3	mg/L		82	90 - 110		

Lab Sample ID: 640-51047-A-5 MSD ^50 — **Client Sample ID: Matrix Spike Duplicate**
Matrix: Water — **Prep Type: Total/NA**
Analysis Batch: 381020

Analyte	Sample Result	Sample Qualifier	Spike Added	MSD Result	MSD Qualifier	Unit	D	%Rec	%Rec. Limits	RPD	RPD Limit
Nitrate Nitrite as N	30	J3	50.0	71.0	J3	mg/L		83	90 - 110	0	10

Lab Sample ID: 660-66589-1 DU — **Client Sample ID: Lake Monroe Boat Ramp**
Matrix: Water — **Prep Type: Total/NA**
Analysis Batch: 381020

Analyte	Sample Result	Sample Qualifier		DU Result	DU Qualifier	Unit	D			RPD	RPD Limit
Nitrate Nitrite as N	0.010	U		0.010	U	mg/L				NC	10

Method: 365.4 - Phosphorus, Total

Lab Sample ID: MB 680-381079/1-A — **Client Sample ID: Method Blank**
Matrix: Water — **Prep Type: Total/NA**
Analysis Batch: 381374 — **Prep Batch: 381079**

Analyte	MB Result	MB Qualifier	PQL	MDL	Unit	D	Prepared	Analyzed	Dil Fac
Phosphorus, Total	0.041	U	0.10	0.041	mg/L		05/01/15 07:43	05/04/15 09:58	1

Lab Sample ID: LCS 680-381079/2-A — **Client Sample ID: Lab Control Sample**
Matrix: Water — **Prep Type: Total/NA**
Analysis Batch: 381374 — **Prep Batch: 381079**

Analyte			Spike Added	LCS Result	LCS Qualifier	Unit	D	%Rec	%Rec. Limits		
Phosphorus, Total			2.00	2.03		mg/L		102	60 - 140		

Lab Sample ID: 660-66575-B-1-B MS ^10 — **Client Sample ID: Matrix Spike**
Matrix: Water — **Prep Type: Total/NA**
Analysis Batch: 381374 — **Prep Batch: 381079**

Analyte	Sample Result	Sample Qualifier	Spike Added	MS Result	MS Qualifier	Unit	D	%Rec	%Rec. Limits		
Phosphorus, Total	5.8	J3	2.00	8.77	J3	mg/L		147	60 - 140		

Lab Sample ID: 660-66575-B-1-C MSD ^10 — **Client Sample ID: Matrix Spike Duplicate**
Matrix: Water — **Prep Type: Total/NA**
Analysis Batch: 381374 — **Prep Batch: 381079**

Analyte	Sample Result	Sample Qualifier	Spike Added	MSD Result	MSD Qualifier	Unit	D	%Rec	%Rec. Limits	RPD	RPD Limit
Phosphorus, Total	5.8	J3	2.00	8.34		mg/L		126	60 - 140	5	40

Method: 365.4 - Phosphorus, Total (Continued)

Lab Sample ID: 660-66575-B-2-B DU — **Client Sample ID: Duplicate**
Matrix: Water — **Prep Type: Total/NA**
Analysis Batch: 381374 — **Prep Batch: 381079**

Analyte	Sample Result	Sample Qualifier		DU Result	DU Qualifier	Unit	D			RPD	RPD Limit
Phosphorus, Total	0.14			0.137		mg/L				1	40

Method: 4500 S2 F-2011 - Sulfide, Total

Lab Sample ID: MB 680-381143/1 — **Client Sample ID: Method Blank**
Matrix: Water — **Prep Type: Total/NA**
Analysis Batch: 381143

Analyte	MB Result	MB Qualifier	PQL	MDL	Unit	D	Prepared	Analyzed	Dil Fac
Total Sulfide	1.0	U	1.0	1.0	mg/L			05/01/15 12:24	1

Lab Sample ID: LCS 680-381143/2 — **Client Sample ID: Lab Control Sample**
Matrix: Water — **Prep Type: Total/NA**
Analysis Batch: 381143

Analyte			Spike Added	LCS Result	LCS Qualifier	Unit	D	%Rec	%Rec. Limits		
Total Sulfide			10.0	10.5		mg/L		105	75 - 125		

Lab Sample ID: LCSD 680-381143/3 — **Client Sample ID: Lab Control Sample Dup**
Matrix: Water — **Prep Type: Total/NA**
Analysis Batch: 381143

Analyte			Spike Added	LCSD Result	LCSD Qualifier	Unit	D	%Rec	%Rec. Limits	RPD	RPD Limit
Total Sulfide			10.0	10.5		mg/L		105	75 - 125	0	30

Lab Sample ID: 680-112040-B-4 DU — **Client Sample ID: Duplicate**
Matrix: Water — **Prep Type: Total/NA**
Analysis Batch: 381143

Analyte	Sample Result	Sample Qualifier		DU Result	DU Qualifier	Unit	D			RPD	RPD Limit
Total Sulfide	1.0	U		1.0	U	mg/L				NC	30

Method: 5310C-2000 - Total Organic Carbon/Persulfate - Ultrav

Lab Sample ID: MB 240-178992/4 — **Client Sample ID: Method Blank**
Matrix: Water — **Prep Type: Total/NA**
Analysis Batch: 178992

Analyte	MB Result	MB Qualifier	PQL	MDL	Unit	D	Prepared	Analyzed	Dil Fac
Total Organic Carbon	0.100	I	1.0	0.080	mg/L			05/01/15 06:58	1

Lab Sample ID: LCS 240-178992/6 — **Client Sample ID: Lab Control Sample**
Matrix: Water — **Prep Type: Total/NA**
Analysis Batch: 178992

Analyte			Spike Added	LCS Result	LCS Qualifier	Unit	D	%Rec	%Rec. Limits		
Total Organic Carbon			45.3	48.3		mg/L		107	88 - 115		

Method: 5310C-2000 - Total Organic Carbon/Persulfate - Ultrav (Continued)

Lab Sample ID: LLCS 240-178992/5 — **Client Sample ID: Lab Control Sample**
Matrix: Water — **Prep Type: Total/NA**
Analysis Batch: 178992

Analyte	Spike Added	LLCS Result	LLCS Qualifier	Unit	D	%Rec	%Rec. Limits
Total Organic Carbon	5.38	5.68		mg/L		106	88 - 115

Lab Sample ID: 240-49953-E-7 MS — **Client Sample ID: Matrix Spike**
Matrix: Water — **Prep Type: Total/NA**
Analysis Batch: 178992

Analyte	Sample Result	Sample Qualifier	Spike Added	MS Result	MS Qualifier	Unit	D	%Rec	%Rec. Limits
Total Organic Carbon	6.8		25.0	32.5		mg/L		103	72 - 136

Lab Sample ID: 240-49953-E-7 MSD — **Client Sample ID: Matrix Spike Duplicate**
Matrix: Water — **Prep Type: Total/NA**
Analysis Batch: 178992

Analyte	Sample Result	Sample Qualifier	Spike Added	MSD Result	MSD Qualifier	Unit	D	%Rec	%Rec. Limits	RPD	RPD Limit
Total Organic Carbon	6.8		25.0	33.6		mg/L		107	72 - 136	3	20

Method: SM 2120B - Color, Colorimetric

Lab Sample ID: MB 660-157547/4 — **Client Sample ID: Method Blank**
Matrix: Water — **Prep Type: Total/NA**
Analysis Batch: 157547

Analyte	MB Result	MB Qualifier	PQL	MDL	Unit	D	Prepared	Analyzed	Dil Fac
Color	5.0	U	5.0	5.0	PCU			04/29/15 13:05	1
pH at time of analysis	6.48		1.0	1.0	SU			04/29/15 13:05	1

Lab Sample ID: LCS 660-157547/5 — **Client Sample ID: Lab Control Sample**
Matrix: Water — **Prep Type: Total/NA**
Analysis Batch: 157547

Analyte	Spike Added	LCS Result	LCS Qualifier	Unit	D	%Rec	%Rec. Limits
Color	30.0	30.0		PCU		100	90 - 110

Lab Sample ID: 660-66589-1 DU — **Client Sample ID: Lake Monroe Boat Ramp**
Matrix: Water — **Prep Type: Total/NA**
Analysis Batch: 157547

Analyte	Sample Result	Sample Qualifier	DU Result	DU Qualifier	Unit	D	RPD	RPD Limit
Color	120		120		PCU		0	20
pH at time of analysis	7.8		7.79		SU		0.1	

Method: SM 2130B - Turbidity

Lab Sample ID: MB 660-157555/2 — **Client Sample ID: Method Blank**
Matrix: Water — **Prep Type: Total/NA**
Analysis Batch: 157555

Analyte	MB Result	MB Qualifier	PQL	MDL	Unit	D	Prepared	Analyzed	Dil Fac
Turbidity	0.50	U	0.50	0.50	NTU			04/30/15 05:35	1

Method: SM 2130B - Turbidity (Continued)

Lab Sample ID: LCSD 660-157555/6 — **Client Sample ID: Lab Control Sample Dup**
Matrix: Water — **Prep Type: Total/NA**
Analysis Batch: 157555

Analyte			Spike Added	LCSD Result	LCSD Qualifier	Unit	D	%Rec	%Rec. Limits	RPD	RPD Limit
Turbidity			40.0	39.5		NTU		99	90 - 110	1	20

Lab Sample ID: 660-66589-1 DU — **Client Sample ID: Lake Monroe Boat Ramp**
Matrix: Water — **Prep Type: Total/NA**
Analysis Batch: 157555

Analyte	Sample Result	Sample Qualifier		DU Result	DU Qualifier	Unit	D			RPD	RPD Limit
Turbidity	5.9			5.96		NTU				1	20

Method: SM 2320B - Alkalinity

Lab Sample ID: MB 660-157578/1 — **Client Sample ID: Method Blank**
Matrix: Water — **Prep Type: Total/NA**
Analysis Batch: 157578

Analyte	MB Result	MB Qualifier	PQL	MDL	Unit	D	Prepared	Analyzed	Dil Fac
Alkalinity as CaCO3	1.0	U	1.0	1.0	mg/L			04/30/15 05:43	1

Lab Sample ID: LCS 660-157578/3 — **Client Sample ID: Lab Control Sample**
Matrix: Water — **Prep Type: Total/NA**
Analysis Batch: 157578

Analyte			Spike Added	LCS Result	LCS Qualifier	Unit	D	%Rec	%Rec. Limits		
Alkalinity as CaCO3			118	123		mg/L		104	90 - 110		

Lab Sample ID: 660-66589-1 DU — **Client Sample ID: Lake Monroe Boat Ramp**
Matrix: Water — **Prep Type: Total/NA**
Analysis Batch: 157578

Analyte	Sample Result	Sample Qualifier		DU Result	DU Qualifier	Unit	D			RPD	RPD Limit
Alkalinity as CaCO3	77			78.3		mg/L				1	30

Method: SM 2540C - Solids, Total Dissolved (TDS)

Lab Sample ID: MB 660-157551/1 — **Client Sample ID: Method Blank**
Matrix: Water — **Prep Type: Total/NA**
Analysis Batch: 157551

Analyte	MB Result	MB Qualifier	PQL	MDL	Unit	D	Prepared	Analyzed	Dil Fac
Total Dissolved Solids	5.0	U	5.0	5.0	mg/L			04/29/15 14:31	1

Lab Sample ID: LCS 660-157551/2 — **Client Sample ID: Lab Control Sample**
Matrix: Water — **Prep Type: Total/NA**
Analysis Batch: 157551

Analyte			Spike Added	LCS Result	LCS Qualifier	Unit	D	%Rec	%Rec. Limits		
Total Dissolved Solids			10000	9420		mg/L		94	80 - 120		

Method: SM 2540C - Solids, Total Dissolved (TDS) (Continued)

Lab Sample ID: 640-51026-E-4 DU — **Client Sample ID: Duplicate**
Matrix: Water — **Prep Type: Total/NA**
Analysis Batch: 157551

Analyte	Sample Result	Sample Qualifier		DU Result	DU Qualifier	Unit	D			RPD	RPD Limit
Total Dissolved Solids	100			90.0		mg/L				14	20

Method: SM 2540D - Solids, Total Suspended (TSS)

Lab Sample ID: MB 660-157542/1 — **Client Sample ID: Method Blank**
Matrix: Water — **Prep Type: Total/NA**
Analysis Batch: 157542

Analyte	MB Result	MB Qualifier	PQL	MDL	Unit	D	Prepared	Analyzed	Dil Fac
Total Suspended Solids	5.0	U	5.0	5.0	mg/L			04/29/15 10:34	1

Lab Sample ID: LCS 660-157542/2 — **Client Sample ID: Lab Control Sample**
Matrix: Water — **Prep Type: Total/NA**
Analysis Batch: 157542

Analyte			Spike Added	LCS Result	LCS Qualifier	Unit	D	%Rec	%Rec. Limits		
Total Suspended Solids			100	98.0		mg/L		98	80 - 120		

Lab Sample ID: 660-66592-A-1 DU — **Client Sample ID: Duplicate**
Matrix: Water — **Prep Type: Total/NA**
Analysis Batch: 157542

Analyte	Sample Result	Sample Qualifier		DU Result	DU Qualifier	Unit	D			RPD	RPD Limit
Total Suspended Solids	690			669		mg/L				3	20

Method: SM 4500 H+ B - pH

Lab Sample ID: LCS 660-157548/1 — **Client Sample ID: Lab Control Sample**
Matrix: Water — **Prep Type: Total/NA**
Analysis Batch: 157548

Analyte			Spike Added	LCS Result	LCS Qualifier	Unit	D	%Rec	%Rec. Limits		
pH			6.00	6.030		SU		101	98 - 102		

Lab Sample ID: 660-66589-1 DU — **Client Sample ID: Lake Monroe Boat Ramp**
Matrix: Water — **Prep Type: Total/NA**
Analysis Batch: 157548

Analyte	Sample Result	Sample Qualifier		DU Result	DU Qualifier	Unit	D			RPD	RPD Limit
pH	7.77	Q		7.780		SU				0.1	20

QC Sample Results

Client: Tetra Tech, Inc.
Project/Site: Lake Monroe

TestAmerica Job ID: 660-66589-1

Method: SM 4500 P E - Orthophosphate

Lab Sample ID: 660-66589-1 MS
Matrix: Water
Analysis Batch: 157582

Client Sample ID: Lake Monroe Boat Ramp
Prep Type: Dissolved

Analyte	Sample Result	Sample Qualifier	Spike Added	MS Result	MS Qualifier	Unit	D	%Rec	%Rec. Limits		
Orthophosphate	0.043		0.300	0.356		mg/L		104	90 - 110		

Lab Sample ID: 660-66589-1 MSD
Matrix: Water
Analysis Batch: 157582

Client Sample ID: Lake Monroe Boat Ramp
Prep Type: Dissolved

Analyte	Sample Result	Sample Qualifier	Spike Added	MSD Result	MSD Qualifier	Unit	D	%Rec	%Rec. Limits	RPD	RPD Limit
Orthophosphate	0.043		0.300	0.367		mg/L		108	90 - 110	3	30

QC Association Summary

Client: Tetra Tech, Inc.
Project/Site: Lake Monroe

TestAmerica Job ID: 660-66589-1

HPLC/IC

Analysis Batch: 381122

Lab Sample ID	Client Sample ID	Prep Type	Matrix	Method	Prep Batch
640-51048-A-6 MS	Matrix Spike	Total/NA	Water	300.0	
640-51048-A-6 MSD	Matrix Spike Duplicate	Total/NA	Water	300.0	
660-66589-1	Lake Monroe Boat Ramp	Total/NA	Water	300.0	
660-66589-1	Lake Monroe Boat Ramp	Total/NA	Water	300.0	
LCS 680-381122/3	Lab Control Sample	Total/NA	Water	300.0	
LCSD 680-381122/4	Lab Control Sample Dup	Total/NA	Water	300.0	
MB 680-381122/2	Method Blank	Total/NA	Water	300.0	

Metals

Prep Batch: 157544

Lab Sample ID	Client Sample ID	Prep Type	Matrix	Method	Prep Batch
660-66589-1	Lake Monroe Boat Ramp	Total Recoverable	Water	3005A	
660-66594-B-1-B MS	Matrix Spike	Total Recoverable	Water	3005A	
660-66594-B-1-C MSD	Matrix Spike Duplicate	Total Recoverable	Water	3005A	
LCS 660-157544/2-A	Lab Control Sample	Total Recoverable	Water	3005A	
MB 660-157544/1-A	Method Blank	Total Recoverable	Water	3005A	

Analysis Batch: 157566

Lab Sample ID	Client Sample ID	Prep Type	Matrix	Method	Prep Batch
660-66589-1	Lake Monroe Boat Ramp	Total Recoverable	Water	6010B	157544
660-66594-B-1-B MS	Matrix Spike	Total Recoverable	Water	6010B	157544
660-66594-B-1-C MSD	Matrix Spike Duplicate	Total Recoverable	Water	6010B	157544
LCS 660-157544/2-A	Lab Control Sample	Total Recoverable	Water	6010B	157544
MB 660-157544/1-A	Method Blank	Total Recoverable	Water	6010B	157544

Prep Batch: 157635

Lab Sample ID	Client Sample ID	Prep Type	Matrix	Method	Prep Batch
660-66589-1	Lake Monroe Boat Ramp	Total/NA	Water	7470A	
660-66645-F-1-C MS	Matrix Spike	Total/NA	Water	7470A	
660-66645-F-1-D MSD	Matrix Spike Duplicate	Total/NA	Water	7470A	
LCS 660-157635/14-A	Lab Control Sample	Total/NA	Water	7470A	
MB 660-157635/13-A	Method Blank	Total/NA	Water	7470A	

Analysis Batch: 157642

Lab Sample ID	Client Sample ID	Prep Type	Matrix	Method	Prep Batch
660-66589-1	Lake Monroe Boat Ramp	Total/NA	Water	7470A	157635
660-66645-F-1-C MS	Matrix Spike	Total/NA	Water	7470A	157635
660-66645-F-1-D MSD	Matrix Spike Duplicate	Total/NA	Water	7470A	157635
LCS 660-157635/14-A	Lab Control Sample	Total/NA	Water	7470A	157635
MB 660-157635/13-A	Method Blank	Total/NA	Water	7470A	157635

General Chemistry

Analysis Batch: 157542

Lab Sample ID	Client Sample ID	Prep Type	Matrix	Method	Prep Batch
660-66589-1	Lake Monroe Boat Ramp	Total/NA	Water	SM 2540D	
660-66592-A-1 DU	Duplicate	Total/NA	Water	SM 2540D	
LCS 660-157542/2	Lab Control Sample	Total/NA	Water	SM 2540D	
MB 660-157542/1	Method Blank	Total/NA	Water	SM 2540D	

General Chemistry (Continued)

Analysis Batch: 157547

Lab Sample ID	Client Sample ID	Prep Type	Matrix	Method	Prep Batch
660-66589-1	Lake Monroe Boat Ramp	Total/NA	Water	SM 2120B	
660-66589-1 DU	Lake Monroe Boat Ramp	Total/NA	Water	SM 2120B	
LCS 660-157547/5	Lab Control Sample	Total/NA	Water	SM 2120B	
MB 660-157547/4	Method Blank	Total/NA	Water	SM 2120B	

Analysis Batch: 157548

Lab Sample ID	Client Sample ID	Prep Type	Matrix	Method	Prep Batch
660-66589-1	Lake Monroe Boat Ramp	Total/NA	Water	SM 4500 H+ B	
660-66589-1 DU	Lake Monroe Boat Ramp	Total/NA	Water	SM 4500 H+ B	
LCS 660-157548/1	Lab Control Sample	Total/NA	Water	SM 4500 H+ B	

Analysis Batch: 157551

Lab Sample ID	Client Sample ID	Prep Type	Matrix	Method	Prep Batch
640-51026-E-4 DU	Duplicate	Total/NA	Water	SM 2540C	
660-66589-1	Lake Monroe Boat Ramp	Total/NA	Water	SM 2540C	
LCS 660-157551/2	Lab Control Sample	Total/NA	Water	SM 2540C	
MB 660-157551/1	Method Blank	Total/NA	Water	SM 2540C	

Analysis Batch: 157555

Lab Sample ID	Client Sample ID	Prep Type	Matrix	Method	Prep Batch
660-66589-1	Lake Monroe Boat Ramp	Total/NA	Water	SM 2130B	
660-66589-1 DU	Lake Monroe Boat Ramp	Total/NA	Water	SM 2130B	
LCS 660-157555/3	Lab Control Sample	Total/NA	Water	SM 2130B	
LCSD 660-157555/6	Lab Control Sample Dup	Total/NA	Water	SM 2130B	
MB 660-157555/2	Method Blank	Total/NA	Water	SM 2130B	

Analysis Batch: 157578

Lab Sample ID	Client Sample ID	Prep Type	Matrix	Method	Prep Batch
660-66589-1	Lake Monroe Boat Ramp	Total/NA	Water	SM 2320B	
660-66589-1 DU	Lake Monroe Boat Ramp	Total/NA	Water	SM 2320B	
LCS 660-157578/3	Lab Control Sample	Total/NA	Water	SM 2320B	
MB 660-157578/1	Method Blank	Total/NA	Water	SM 2320B	

Analysis Batch: 157582

Lab Sample ID	Client Sample ID	Prep Type	Matrix	Method	Prep Batch
660-66589-1	Lake Monroe Boat Ramp	Dissolved	Water	SM 4500 P E	
660-66589-1 MS	Lake Monroe Boat Ramp	Dissolved	Water	SM 4500 P E	
660-66589-1 MSD	Lake Monroe Boat Ramp	Dissolved	Water	SM 4500 P E	

Analysis Batch: 178992

Lab Sample ID	Client Sample ID	Prep Type	Matrix	Method	Prep Batch
240-49953-E-7 MS	Matrix Spike	Total/NA	Water	5310C-2000	
240-49953-E-7 MSD	Matrix Spike Duplicate	Total/NA	Water	5310C-2000	
660-66589-1	Lake Monroe Boat Ramp	Total/NA	Water	5310C-2000	
LCS 240-178992/6	Lab Control Sample	Total/NA	Water	5310C-2000	
LLCS 240-178992/5	Lab Control Sample	Total/NA	Water	5310C-2000	
MB 240-178992/4	Method Blank	Total/NA	Water	5310C-2000	

Analysis Batch: 380972

Lab Sample ID	Client Sample ID	Prep Type	Matrix	Method	Prep Batch
660-66589-1	Lake Monroe Boat Ramp	Total/NA	Water	Total Nitrogen	

General Chemistry (Continued)

Analysis Batch: 381020

Lab Sample ID	Client Sample ID	Prep Type	Matrix	Method	Prep Batch
640-51047-A-5 MS ^50	Matrix Spike	Total/NA	Water	353.2	
640-51047-A-5 MSD ^50	Matrix Spike Duplicate	Total/NA	Water	353.2	
660-66589-1	Lake Monroe Boat Ramp	Total/NA	Water	353.2	
660-66589-1 DU	Lake Monroe Boat Ramp	Total/NA	Water	353.2	
LCS 680-381020/15	Lab Control Sample	Total/NA	Water	353.2	
MB 680-381020/13	Method Blank	Total/NA	Water	353.2	

Prep Batch: 381079

Lab Sample ID	Client Sample ID	Prep Type	Matrix	Method	Prep Batch
660-66575-B-1-B MS ^10	Matrix Spike	Total/NA	Water	Digestion	
660-66575-B-1-C MSD ^10	Matrix Spike Duplicate	Total/NA	Water	Digestion	
660-66575-B-2-B DU	Duplicate	Total/NA	Water	Digestion	
660-66589-1	Lake Monroe Boat Ramp	Total/NA	Water	Digestion	
LCS 680-381079/2-A	Lab Control Sample	Total/NA	Water	Digestion	
MB 680-381079/1-A	Method Blank	Total/NA	Water	Digestion	

Analysis Batch: 381143

Lab Sample ID	Client Sample ID	Prep Type	Matrix	Method	Prep Batch
660-66589-1	Lake Monroe Boat Ramp	Total/NA	Water	4500 S2 F-2011	
680-112040-B-4 DU	Duplicate	Total/NA	Water	4500 S2 F-2011	
LCS 680-381143/2	Lab Control Sample	Total/NA	Water	4500 S2 F-2011	
LCSD 680-381143/3	Lab Control Sample Dup	Total/NA	Water	4500 S2 F-2011	
MB 680-381143/1	Method Blank	Total/NA	Water	4500 S2 F-2011	

Analysis Batch: 381171

Lab Sample ID	Client Sample ID	Prep Type	Matrix	Method	Prep Batch
640-51048-A-5 MS	Matrix Spike	Total/NA	Water	350.1	
640-51048-A-5 MSD	Matrix Spike Duplicate	Total/NA	Water	350.1	
660-66589-1	Lake Monroe Boat Ramp	Total/NA	Water	350.1	
680-112040-C-3 DU	Duplicate	Total/NA	Water	350.1	
LCS 680-381171/1	Lab Control Sample	Total/NA	Water	350.1	
MB 680-381171/11	Method Blank	Total/NA	Water	350.1	

Analysis Batch: 381374

Lab Sample ID	Client Sample ID	Prep Type	Matrix	Method	Prep Batch
660-66575-B-1-B MS ^10	Matrix Spike	Total/NA	Water	365.4	381079
660-66575-B-1-C MSD ^10	Matrix Spike Duplicate	Total/NA	Water	365.4	381079
660-66575-B-2-B DU	Duplicate	Total/NA	Water	365.4	381079
660-66589-1	Lake Monroe Boat Ramp	Total/NA	Water	365.4	381079
LCS 680-381079/2-A	Lab Control Sample	Total/NA	Water	365.4	381079
MB 680-381079/1-A	Method Blank	Total/NA	Water	365.4	381079

Analysis Batch: 381375

Lab Sample ID	Client Sample ID	Prep Type	Matrix	Method	Prep Batch
660-66575-B-1-B MS ^10	Matrix Spike	Total/NA	Water	351.2	381079
660-66575-B-1-C MSD ^10	Matrix Spike Duplicate	Total/NA	Water	351.2	381079
660-66575-B-2-B DU	Duplicate	Total/NA	Water	351.2	381079
660-66589-1	Lake Monroe Boat Ramp	Total/NA	Water	351.2	381079
LCS 680-381079/2-A	Lab Control Sample	Total/NA	Water	351.2	381079
MB 680-381079/1-A	Method Blank	Total/NA	Water	351.2	381079

Lab Chronicle

Client: Tetra Tech, Inc.
Project/Site: Lake Monroe

TestAmerica Job ID: 660-66589-1

Client Sample ID: Lake Monroe Boat Ramp

Lab Sample ID: 660-66589-1

Date Collected: 04/28/15 12:30

Matrix: Water

Date Received: 04/29/15 08:55

Prep Type	Batch Type	Batch Method	Run	Dilution Factor	Batch Number	Prepared or Analyzed	Analyst	Lab
Total/NA	Analysis	300.0		10	381122	05/01/15 16:28	DAS	TAL SAV
Total/NA	Analysis	300.0		2	381122	05/01/15 16:43	DAS	TAL SAV
Total Recoverable	Prep	3005A			157544	04/29/15 12:30	GH1	TAL TAM
Total Recoverable	Analysis	6010B		1	157566	04/30/15 08:45	GAF	TAL TAM
Total/NA	Prep	7470A			157635	05/04/15 12:20	GH1	TAL TAM
Total/NA	Analysis	7470A		1	157642	05/04/15 15:22	GH1	TAL TAM
Total/NA	Analysis	350.1		1	381171	05/01/15 11:56	JME	TAL SAV
Total/NA	Prep	Digestion			381079	05/01/15 07:43	JRJ	TAL SAV
Total/NA	Analysis	351.2		1	381375	05/04/15 10:08	JER	TAL SAV
Total/NA	Analysis	353.2		1	381020	04/30/15 14:55	GRX	TAL SAV
Total/NA	Prep	Digestion			381079	05/01/15 07:43	JRJ	TAL SAV
Total/NA	Analysis	365.4		1	381374	05/04/15 10:08	JER	TAL SAV
Total/NA	Analysis	4500 S2 F-2011		1	381143	05/01/15 12:24	JRJ	TAL SAV
Total/NA	Analysis	5310C-2000		1	178992	05/01/15 10:58	TPH	TAL CAN
Total/NA	Analysis	SM 2120B		2	157547	04/29/15 13:05	AJG	TAL TAM
Total/NA	Analysis	SM 2130B		1	157555	04/30/15 05:35	AJG	TAL TAM
Total/NA	Analysis	SM 2320B		1	157578	04/30/15 05:43	AJG	TAL TAM
Total/NA	Analysis	SM 2540C		1	157551	04/29/15 14:31	SC1	TAL TAM
Total/NA	Analysis	SM 2540D		1	157542	04/29/15 10:34	SC1	TAL TAM
Total/NA	Analysis	SM 4500 H+ B		1	157548	04/29/15 13:20	AJG	TAL TAM
Dissolved	Analysis	SM 4500 P E		1	157582	04/29/15 15:20	ELE	TAL TAM
Total/NA	Analysis	Total Nitrogen		1	380972	04/30/15 13:00	JER	TAL SAV

Laboratory References:

ENCO = ENCO-Orlando, 10775 Central Port Drive, Orlando, FL 32824, TEL (407)826-5314

TAL CAN = TestAmerica Canton, 4101 Shuffel Street NW, North Canton, OH 44720, TEL (330)497-9396

TAL SAV = TestAmerica Savannah, 5102 LaRoche Avenue, Savannah, GA 31404, TEL (912)354-7858

TAL TAM = TestAmerica Tampa, 6712 Benjamin Road, Suite 100, Tampa, FL 33634, TEL (813)885-7427

Method Summary

Client: Tetra Tech, Inc.
Project/Site: Lake Monroe

TestAmerica Job ID: 660-66589-1

Method	Method Description	Protocol	Laboratory
300.0	Anions, Ion Chromatography	MCAWW	TAL SAV
6010B	Metals (ICP)	SW846	TAL TAM
7470A	Mercury (CVAA)	SW846	TAL TAM
350.1	Nitrogen, Ammonia	MCAWW	TAL SAV
351.2	Nitrogen, Total Kjeldahl	MCAWW	TAL SAV
353.2	Nitrogen, Nitrate-Nitrite	MCAWW	TAL SAV
365.4	Phosphorus, Total	EPA	TAL SAV
4500 S2 F-2011	Sulfide, Total	SM	TAL SAV
5310C-2000	Total Organic Carbon/Persulfate - Ultrav	SM	TAL CAN
SM 2120B	Color, Colorimetric	SM	TAL TAM
SM 2130B	Turbidity	SM	TAL TAM
SM 2320B	Alkalinity	SM	TAL TAM
SM 2540C	Solids, Total Dissolved (TDS)	SM	TAL TAM
SM 2540D	Solids, Total Suspended (TSS)	SM	TAL TAM
SM 4500 H+ B	pH	SM	TAL TAM
SM 4500 P E	Orthophosphate	SM	TAL TAM
Total Nitrogen	Nitrogen, Total	EPA	TAL SAV
Chlorophyll A ug/L	Chlorophyll A	NONE	ENCO
Fecal Coliform	SM 9222D Fecal Coliform by MF	NONE	ENCO

Protocol References:

EPA = US Environmental Protection Agency

MCAWW = "Methods For Chemical Analysis Of Water And Wastes", EPA-600/4-79-020, March 1983 And Subsequent Revisions.

NONE = NONE

SM = "Standard Methods For The Examination Of Water And Wastewater",

SW846 = "Test Methods For Evaluating Solid Waste, Physical/Chemical Methods", Third Edition, November 1986 And Its Updates.

Laboratory References:

ENCO = ENCO-Orlando, 10775 Central Port Drive, Orlando, FL 32824, TEL (407)826-5314

TAL CAN = TestAmerica Canton, 4101 Shuffel Street NW, North Canton, OH 44720, TEL (330)497-9396

TAL SAV = TestAmerica Savannah, 5102 LaRoche Avenue, Savannah, GA 31404, TEL (912)354-7858

TAL TAM = TestAmerica Tampa, 6712 Benjamin Road, Suite 100, Tampa, FL 33634, TEL (813)885-7427

Certification Summary

Client: Tetra Tech, Inc.
Project/Site: Lake Monroe

TestAmerica Job ID: 660-66589-1

Laboratory: TestAmerica Tampa

Unless otherwise noted, all analytes for this laboratory were covered under each certification below.

Authority	Program	EPA Region	Certification ID	Expiration Date
Florida	NELAP	4	E84282	06-30-15 *

The following analytes are included in this report, but are not certified under this certification:

Analysis Method	Prep Method	Matrix	Analyte
SM 2120B		Water	pH at time of analysis

Laboratory: TestAmerica Canton

All certifications held by this laboratory are listed. Not all certifications are applicable to this report.

Authority	Program	EPA Region	Certification ID	Expiration Date
California	NELAP	9	01144CA	06-30-14 *
California	State Program	9	2927	04-30-17
Connecticut	State Program	1	PH-0590	12-31-15
Florida	NELAP	4	E87225	06-30-15 *
Georgia	State Program	4	N/A	06-30-15 *
Illinois	NELAP	5	200004	07-31-15
Kansas	NELAP	7	E-10336	05-31-15 *
Kentucky (UST)	State Program	4	58	06-30-15 *
Kentucky (WW)	State Program	4	98016	12-31-15
L-A-B	DoD ELAP		L2315	07-18-16
Minnesota	NELAP	5	039-999-348	12-31-15
Nevada	State Program	9	OH-000482008A	07-31-15
New Jersey	NELAP	2	OH001	06-30-15 *
New York	NELAP	2	10975	03-31-16 *
Ohio VAP	State Program	5	CL0024	10-31-15
Oregon	NELAP	10	4062	02-23-16
Pennsylvania	NELAP	3	68-00340	08-31-15
Texas	NELAP	6		08-31-15
USDA	Federal		P330-13-00319	11-26-16
Virginia	NELAP	3	460175	09-14-15
Washington	State Program	10	C971	01-12-16
West Virginia DEP	State Program	3	210	12-31-15
Wisconsin	State Program	5	999518190	08-31-15

Laboratory: TestAmerica Savannah

Unless otherwise noted, all analytes for this laboratory were covered under each certification below.

Authority	Program	EPA Region	Certification ID	Expiration Date
Florida	NELAP	4	E87052	06-30-15

The following analytes are included in this report, but certification is not offered by the governing authority:

Analysis Method	Prep Method	Matrix	Analyte
Total Nitrogen		Water	Nitrogen, Total

* Certification renewal pending - certification considered valid.

ENCO Laboratories

Accurate. Timely. Responsive. Innovative.

10775 Central Port Drive
Orlando FL, 32824
Phone: 407.826.5314 FAX: 407.850.6945

Tuesday, May 5, 2015
Test America - Tampa (TE022)
Attn: Nancy Robertson
6712 Benjamin Road, Suite 100
Tampa, FL 33634

RE: Laboratory Results for
Project Number: 660-66589, Project Name/Desc: Test America -
ENCO Workorder(s): A502603

Dear Nancy Robertson,

Enclosed is a copy of your laboratory report for test samples received by our laboratory on Tuesday, April 28, 2015.

Unless otherwise noted in an attached project narrative, all samples were received in acceptable condition and processed in accordance with the referenced methods/procedures. Results for these procedures apply only to the samples as submitted.

The analytical results contained in this report are in compliance with NELAC standards, except as noted in the project narrative. This report shall not be reproduced except in full, without the written approval of the Laboratory.

This report contains only those analyses performed by Environmental Conservation Laboratories. Unless otherwise noted, all analyses were performed at ENCO Orlando. Data from outside organizations will be reported under separate cover.

If you have any questions or require further information, please do not hesitate to contact me.

Sincerely,

Ronald Wambles For David Camacho

Project Manager

Enclosure(s)

SAMPLE SUMMARY/LABORATORY CHRONICLE

Client ID: LK Monroe Boat Ramp **Lab ID:** A502603-01 **Sampled:** 04/28/15 12:30 **Received:** 04/28/15 15:07

Parameter	Hold Date/Time(s)				Prep Date/Time(s)		Analysis Date/Time(s)	
SM 10200H-2001	04/30/15	12:30	05/12/15		04/28/15	16:22	04/28/15	16:22
SM 9222D-1997	04/28/15	18:30	04/29/15	16:15	04/28/15	16:15	04/29/15	16:15

SAMPLE DETECTION SUMMARY

Client ID: LK Monroe Boat Ramp **Lab ID:** A502603-01

Analyte	Results	Flag	MDL	PQL	Units	Method	Notes
Chlorophyll a	25		0.50	0.50	mg/m3	SM 10200H-2001	
Coliform, Fecal	57		1	1	CFU/100 ml	SM 9222D-1997	

This report relates only to the sample as received by the laboratory, and may only be reproduced in full.

www.encolabs.com

ANALYTICAL RESULTS

Description:	LK Monroe Boat Ramp	**Lab Sample ID:**	A502603-01	**Received:**	04/28/15 15:07
Matrix:	Surface Water	**Sampled:**	04/28/15 12:30	**Work Order:**	A502603
Project:	Test America -	**Sampled By:**			

Classical Chemistry Parameters

^ - ENCO Orlando certified analyte [NELAC E83182]

Analyte [CAS Number]	Results	Flag	Units	DF	MDL	PQL	Batch	Method	Analyzed	By	Notes
Chlorophyll a [42617-16-3]^	**25**		mg/m3	1	0.50	0.50	5D28045	SM 10200H-2001	04/28/15 16:22	M1N	

Microbiological Parameters

^ - ENCO Orlando certified analyte [NELAC E83182]

Analyte [CAS Number]	Results	Flag	Units	DF	MDL	PQL	Batch	Method	Analyzed	By	Notes
Coliform, Fecal^	**57**		CFU/100 ml	1	1	1	5D28047	SM 9222D-1997	04/29/15 16:15	M1N	

QUALITY CONTROL DATA

Classical Chemistry Parameters - Quality Control

Batch 5D28045 - NO PREP

Blank (5D28045-BLK1) Prepared: 04/28/2015 11:30 Analyzed: 04/28/2015 11:30

Analyte	Result	Flag	POL	Units	Spike Level	Source Result	%REC	%REC Limits	RPD	RPD Limit	Notes
Chlorophyll a	0.50	U	0.50	mg/m3							

Duplicate (5D28045-DUP1) Prepared: 04/28/2015 11:30 Analyzed: 04/28/2015 11:30

Source: A502568-01

Analyte	Result	Flag	POL	Units	Spike Level	Source Result	%REC	%REC Limits	RPD	RPD Limit	Notes
Chlorophyll a	120		0.50	mg/m3		100			18	25	

Microbiological Parameters - Quality Control

Batch 5D28047 - NO PREP

Blank (5D28047-BLK1) Prepared: 04/28/2015 14:59 Analyzed: 04/29/2015 14:30

Analyte	Result	Flag	POL	Units	Spike Level	Source Result	%REC	%REC Limits	RPD	RPD Limit	Notes
Coliform, Fecal	**Absent**	**U**	1	CFU/100 ml							

Duplicate (5D28047-DUP1) Prepared: 04/28/2015 14:59 Analyzed: 04/29/2015 14:30

Source: A502595-01

Analyte	Result	Flag	POL	Units	Spike Level	Source Result	%REC	%REC Limits	RPD	RPD Limit	Notes
Coliform, Fecal	<1	U	1	CFU/100 ml		1 U				25	

FLAGS/NOTES AND DEFINITIONS

PQL	PQL: Practical Quantitation Limit.
B	Results are based upon membrane filter colony counts that are outside the method indicated ideal range.
I	The reported value is between the laboratory method detection limit (MDL) and the practical quantitation limit (PQL).
J	Estimated value.
K	Off-scale low; Actual value is known to be less than the value given.
L	Off-scale high; Actual value is known to be greater than value given.
M	Presence of analyte is verified but not quantified; the actual value is less than the MRL but greater than the MDL.
N	Presumptive evidence of presence of material.
O	Sampled, but analysis lost or not performed.
Q	Sample exceeded the accepted holding time.
T	Value reported is less than the laboratory method detection limit. The value is reported for informational purposes only and shall not be used in statistical analysis.
U	Indicates that the compound was analyzed for but not detected.
V	Indicates that the analyte was detected in both the sample and the associated method blank.
Y	The laboratory analysis was from an improperly preserved sample. The data may not be accurate.
Z	Too many colonies were present (TNTC); the numeric value represents the filtration volume.
?	Data are rejected and should not be used. Some or all of the quality control data for the analyte were outside criteria, and the presence or absence of the analyte cannot be determined from the data.
*****	Not reported due to interference.

TestAmerica Tampa
6712 Benjamin Road
Suite 100
Tampa, FL 33634
Phone: 813.885.7427 Fax:

Chain of Custody Record

024499

TestAmerica
THE LEADER IN ENVIRONMENTAL TESTING
TestAmerica Laboratories, Inc.
TAL-8210 (0713)

CONTACT: Nancy Robertson

Regulatory Program: ☐ DW ☐ NPDES ☐ RCRA ☐ Other:

Client Contact	Project Manager: Nancy Robertson	Site Contact:	Date: 4-28-15	COC No: 660-82449-19984.1
Company Name: ENCO	Tel/Fax:	Lab Contact: Nancy Robertson	Carrier:	____ of ____ COCs
Address:	Analysis Turnaround Time			Sampler:
City/State/Zip: Orlando, FL	☐ CALENDAR DAYS ☐ WORKING DAYS			For Lab Use Only:
Phone:	TAT if different from Below ____			Walk-in Client:
Fax:	☐ 2 weeks			Lab Sampling:
Project Name: LK MONROE	☐ 1 week			
Site:	☐ 2 days			Job / SDG No.:
~~PO#~~ Project# 66008532	☐ 1 day			

Sample Identification	Sample Date	Sample Time	Sample Type (C=Comp, G=Grab)	Matrix	# of Cont.	Filtered Sample (Y/N)	Perform MS / MSD (Y/N)	Fecal Coliform	CHL-A	Sample Specific Notes:
LK MONROE Boat Ramp	4/28/15	1230	G	SW	4			2	2	A502603

Preservation Used: 1= Ice, 2= HCl; 3= H2SO4; 4=HNO3; 5=NaOH; 6= Other _____

Possible Hazard Identification:
Are any samples from a listed EPA Hazardous Waste? Please List any EPA Waste Codes for the sample in the Comments Section if the lab is to dispose of the sample.
☐ Non-Hazard ☐ Flammable ☐ Skin Irritant ☐ Poison B ☐ Unknown

Sample Disposal (A fee may be assessed if samples are retained longer than 1 month)
☐ Return to Client ☐ Disposal by Lab ☐ Archive for _____ Months

Special Instructions/QC Requirements & Comments:

Custody Seals Intact: ☐ Yes ☐ No | Custody Seal No.: | Cooler Temp. (°C): Obs'd: 2.0 Corr'd: ____ | Therm ID No.: ____

Relinquished by:	Company:	Date/Time:	Received by:	Company:	Date/Time:
[signature]	TA Orlando	4/28/15 1507	Brandy Hu[illegible]	ENCO	4/28/15 1507
Relinquished by:	Company:	Date/Time:	Received by:	Company:	Date/Time:
Relinquished by:	Company:	Date/Time:	Received in Laboratory by:	Company:	Date/Time:

5/6/2015

TestAmerica Tampa
6712 Benjamin Road Suite 100
Tampa, FL 33634
Phone (813) 885-7427 Fax (813) 885-7049

Chain of Custody Record

TestAmerica
THE LEADER IN ENVIRONMENTAL TESTING

Client Information	Sampler:	Lab PM: Robertson, Nancy	Carrier Tracking No(s):	COC No: 660-62248-19984.1
Client Contact: Rasesh Shah	Phone:	E-Mail: nancy.robertson@testamericainc.com		Page: Page 1 of 1
Company: Tetra Tech, Inc.				Job #:
Address: 201 E. Pine St., Ste. 1000	Due Date Requested:			
City: Orlando	TAT Requested (days):			
State, Zip: FL, 32801				
Phone:	PO #: Purchase Order Requested			
Email: rasesh.shah@tetratech.com	WO #:			
Project Name: Lake Monroe	Project #: 66008532			
Site:	SSOW#:			

Analysis Requested

Preservation Codes:
A - HCL, B - NaOH, C - Zn Acetate, D - Nitric Acid, E - NaHSO4, F - MeOH, G - Amchlor, H - Ascorbic Acid, I - Ice, J - DI Water, K - EDTA, L - EDA
M - Hexane, N - None, O - AsNaO2, P - Na2O4S, Q - Na2SO3, R - Na2S2SO3, S - H2SO4, T - TSP Dodecahydrate, U - Acetone, V - MCAA, W - ph 4-5, Z - other (specify)
Other:

Sample Identification	Sample Date	Sample Time	Sample Type (C=comp, G=grab)	Matrix (W=water, S=solid, O=waste/oil, BT=Tissue, A=Air)	Field Filtered Sample (Yes or No)	Perform MS/MSD (Yes or No)	2540C, 2540D	2320B, SM2130B, SM4500_H+	4500_P_E_Ortho - Orthophosphate	6010B, 7470A	2120B - Color	SUBCONTRACT - Chlorophyll A ug/L	9222D - Coliform, Fecal	300_ORGFM_28D - Chloride & Sulfate	350.1 - Ammonia as N	SM4500_S2_F - Total Sulfide	351.2, 353.2_Pres, 365.4, Nitrogen,Total	SM5310_TOC_B - Total Organic Carbon	Total Number of containers	Special Instructions/Note:
			Preservation Code:		X	X	N	N	N	D	N	N	R	N	S	CB	S	S	X	
Lake Monroe Boat Ramp	4/28/15	1230	G	Water	N	N	X	X	X	X	X	X	X	X	X	X	X	X		
~~Wheeling PS~~	~~4/28/15~~		G	Water	N	N														

660-66589 Login
PM: Robertson, Nancy
Company: Tetra Tech, Inc.
Loc: 660
66589

Possible Hazard Identification
☐ Non-Hazard ☐ Flammable ☐ Skin Irritant ☐ Poison B ☐ Unknown ☐ Radiological

Sample Disposal (A fee may be assessed if samples are retained longer than 1 month)
☐ Return To Client ☐ Disposal By Lab ☐ Archive For _____ Months

Deliverable Requested: I, II, III, IV, Other (specify)

Special Instructions/QC Requirements:

Empty Kit Relinquished by:	Date: 4-0-15		Time: 13:30		Method of Shipment: lab courier	
Relinquished by:	Date/Time: 4/28/15 1330	Company TT	Received by:		Date/Time: 4/28/15 @ 1455	Company TA orl
Relinquished by:	Date/Time: 4/28/15 @ 1540	Company TA Orlando	Received by:		Date/Time: 04/29/15 0355	Company TA TPA
Relinquished by:	Date/Time:	Company	Received by:		Date/Time:	Company

Custody Seals Intact: Δ Yes Λ No
Custody Seal No.:
Cooler Temperature(s) °C and Other Remarks: 660-66589 1.8/1.3

Login Sample Receipt Checklist

Client: Tetra Tech, Inc.

Job Number: 660-66589-1

Login Number: 66589
List Number: 1
Creator: Conner, Keaton

List Source: TestAmerica Tampa

Question	Answer	Comment
Radioactivity wasn't checked or is </= background as measured by a survey meter.	N/A	
The cooler's custody seal, if present, is intact.	True	
Sample custody seals, if present, are intact.	True	
The cooler or samples do not appear to have been compromised or tampered with.	True	
Samples were received on ice.	True	
Cooler Temperature is acceptable.	True	
Cooler Temperature is recorded.	True	
COC is present.	True	
COC is filled out in ink and legible.	True	
COC is filled out with all pertinent information.	True	
Is the Field Sampler's name present on COC?	True	
There are no discrepancies between the containers received and the COC.	True	
Samples are received within Holding Time.	True	
Sample containers have legible labels.	True	
Containers are not broken or leaking.	True	
Sample collection date/times are provided.	True	
Appropriate sample containers are used.	True	
Sample bottles are completely filled.	True	
Sample Preservation Verified.	N/A	
There is sufficient vol. for all requested analyses, incl. any requested MS/MSDs	True	
Containers requiring zero headspace have no headspace or bubble is <6mm (1/4").	N/A	
Multiphasic samples are not present.	True	
Samples do not require splitting or compositing.	True	
Residual Chlorine Checked.	N/A	

Login Sample Receipt Checklist

Client: Tetra Tech, Inc.

Job Number: 660-66589-1

Login Number: 66589
List Number: 2
Creator: Kicklighter, Marilyn D

List Source: TestAmerica Savannah
List Creation: 04/30/15 09:36 AM

Question	Answer	Comment
Radioactivity wasn't checked or is </= background as measured by a survey meter.	N/A	
The cooler's custody seal, if present, is intact.	True	
Sample custody seals, if present, are intact.	True	
The cooler or samples do not appear to have been compromised or tampered with.	True	
Samples were received on ice.	True	
Cooler Temperature is acceptable.	True	
Cooler Temperature is recorded.	True	
COC is present.	True	
COC is filled out in ink and legible.	True	
COC is filled out with all pertinent information.	True	
Is the Field Sampler's name present on COC?	N/A	
There are no discrepancies between the containers received and the COC.	True	
Samples are received within Holding Time.	True	
Sample containers have legible labels.	True	
Containers are not broken or leaking.	True	
Sample collection date/times are provided.	True	
Appropriate sample containers are used.	True	
Sample bottles are completely filled.	True	
Sample Preservation Verified.	N/A	
There is sufficient vol. for all requested analyses, incl. any requested MS/MSDs	True	
Containers requiring zero headspace have no headspace or bubble is <6mm (1/4").	N/A	
Multiphasic samples are not present.	True	
Samples do not require splitting or compositing.	True	
Residual Chlorine Checked.	N/A	

5. Tivoli Wheeling Pump Station Water Analytical Testing Report (Base Flow) (05/14/2015)

TestAmerica

THE LEADER IN ENVIRONMENTAL TESTING

ANALYTICAL REPORT

TestAmerica Laboratories, Inc.
TestAmerica Tampa
6712 Benjamin Road
Suite 100
Tampa, FL 33634
Tel: (813)885-7427

TestAmerica Job ID: 660-66645-1
Client Project/Site: Lake Monroe

For:
Tetra Tech, Inc.
201 E. Pine St., Ste. 1000
Orlando, Florida 32801

Attn: Rasesh Shah

Authorized for release by:
5/14/2015 10:56:55 AM

Nancy Robertson, Project Manager II
(813)885-7427
nancy.robertson@testamericainc.com

LINKS

Review your project results through TotalAccess

Have a Question? Ask The Expert

Visit us at: www.testamericainc.com

The test results in this report meet all 2003 NELAC and 2009 TNI requirements for accredited parameters, exceptions are noted in this report. This report may not be reproduced except in full, and with written approval from the laboratory. For questions please contact the Project Manager at the e-mail address or telephone number listed on this page.

This report has been electronically signed and authorized by the signatory. Electronic signature is intended to be the legally binding equivalent of a traditionally handwritten signature.

Results relate only to the items tested and the sample(s) as received by the laboratory.

Table of Contents

Cover Page 1
Table of Contents 2
Sample Summary 3
Case Narrative 4
Definitions/Glossary 5
Detection Summary 6
Client Sample Results 7
QC Sample Results 8
QC Association Summary 18
Lab Chronicle 22
Method Summary 23
Certification Summary 24
Subcontract Data 25
Chain of Custody 32
Receipt Checklists 33

Sample Summary

Client: Tetra Tech, Inc.
Project/Site: Lake Monroe

TestAmerica Job ID: 660-66645-1

Lab Sample ID	Client Sample ID	Matrix	Collected	Received
660-66645-1	Wheeling PS Base Flow,Lake Clearwater	Water	04/30/15 10:25	05/01/15 09:05

Job ID: 660-66645-1

Laboratory: TestAmerica Tampa

Narrative

Job Narrative
660-66645-1

Comments
No additional comments.

Receipt
The sample was received on 5/1/2015 9:05 AM; the sample arrived in good condition, properly preserved and, where required, on ice. The temperature of the cooler at receipt was 1.3º C.

HPLC/IC
No analytical or quality issues were noted, other than those described in the Definitions/Glossary page.

Metals
Method 6010B: The method blank for 157629 contained an estimated result for manganese. The associated sample was not re-extracted and/or re-analyzed because results were greater than 10X the value found in the method blank.

No additional analytical or quality issues were noted, other than those described above or in the Definitions/Glossary page.

General Chemistry
Method 9040B, SM 4500 H+ B: The method requested is normally performed in the field, and performing this method in the laboratory may produce biased results.

No additional analytical or quality issues were noted, other than those described above or in the Definitions/Glossary page.

Subcontract non-Sister
Chlorophyll-A and coliforms were subcontracted to ENCO Labs.

Definitions/Glossary

Client: Tetra Tech, Inc.
Project/Site: Lake Monroe

TestAmerica Job ID: 660-66645-1

Qualifiers

HPLC/IC

Qualifier	Qualifier Description
U	Indicates that the compound was analyzed for but not detected.

Metals

Qualifier	Qualifier Description
U	Indicates that the compound was analyzed for but not detected.
I	The reported value is between the laboratory method detection limit and the laboratory practical quantitation limit.

General Chemistry

Qualifier	Qualifier Description
J3	Estimated value; value may not be accurate. Spike recovery or RPD outside of criteria.
U	Indicates that the compound was analyzed for but not detected.
Q	Sample held beyond the accepted holding time.
I	The reported value is between the laboratory method detection limit and the laboratory practical quantitation limit.

Glossary

Abbreviation	These commonly used abbreviations may or may not be present in this report.
¤	Listed under the "D" column to designate that the result is reported on a dry weight basis
%R	Percent Recovery
CFL	Contains Free Liquid
CNF	Contains no Free Liquid
DER	Duplicate error ratio (normalized absolute difference)
Dil Fac	Dilution Factor
DL, RA, RE, IN	Indicates a Dilution, Re-analysis, Re-extraction, or additional Initial metals/anion analysis of the sample
DLC	Decision level concentration
MDA	Minimum detectable activity
EDL	Estimated Detection Limit
MDC	Minimum detectable concentration
MDL	Method Detection Limit
ML	Minimum Level (Dioxin)
NC	Not Calculated
ND	Not detected at the reporting limit (or MDL or EDL if shown)
PQL	Practical Quantitation Limit
QC	Quality Control
RER	Relative error ratio
RL	Reporting Limit or Requested Limit (Radiochemistry)
RPD	Relative Percent Difference, a measure of the relative difference between two points
TEF	Toxicity Equivalent Factor (Dioxin)
TEQ	Toxicity Equivalent Quotient (Dioxin)

Detection Summary

Client: Tetra Tech, Inc.
Project/Site: Lake Monroe

TestAmerica Job ID: 660-66645-1

Client Sample ID: Wheeling PS Base Flow,Lake Clearwater — Lab Sample ID: 660-66645-1

Analyte	Result	Qualifier	PQL	MDL	Unit	Dil Fac	D	Method	Prep Type
Sulfate	18		1.0	0.40	mg/L	1		300.0	Total/NA
Chloride	69		1.0	0.40	mg/L	2		300.0	Total/NA
Iron	3.1		0.20	0.050	mg/L	1		6010B	Total Recoverable
Manganese	0.040		0.0040	0.0010	mg/L	1		6010B	Total Recoverable
Zinc	0.031		0.020	0.0050	mg/L	1		6010B	Total Recoverable
Nitrogen, Kjeldahl	1.2		0.20	0.10	mg/L	1		351.2	Total/NA
Nitrate Nitrite as N	3.0		0.25	0.050	mg/L	5		353.2	Total/NA
Phosphorus, Total	0.17		0.10	0.041	mg/L	1		365.4	Total/NA
Color	90		10	10	PCU	2		SM 2120B	Total/NA
pH at time of analysis	6.8		1.0	1.0	SU	2		SM 2120B	Total/NA
Turbidity	21		0.50	0.50	NTU	1		SM 2130B	Total/NA
Alkalinity as CaCO3	39		1.0	1.0	mg/L	1		SM 2320B	Total/NA
Total Dissolved Solids	200		5.0	5.0	mg/L	1		SM 2540C	Total/NA
Total Suspended Solids	34		1.8	1.8	mg/L	1		SM 2540D	Total/NA
pH	6.81	Q			SU	1		SM 4500 H+ B	Total/NA
Total Organic Carbon	12		1.0	0.50	mg/L	1		SM 5310B	Total/NA
Nitrogen, Total	4.2		0.25	0.25	mg/L	1		Total Nitrogen	Total/NA
Orthophosphate	0.016		0.010	0.0050	mg/L	1		SM 4500 P E	Dissolved

This Detection Summary does not include radiochemical test results.

Client Sample Results

Client: Tetra Tech, Inc.
Project/Site: Lake Monroe

TestAmerica Job ID: 660-66645-1

Client Sample ID: Wheeling PS Base Flow,Lake Clearwater

Lab Sample ID: 660-66645-1
Date Collected: 04/30/15 10:25
Matrix: Water
Date Received: 05/01/15 09:05

Method: 300.0 - Anions, Ion Chromatography

Analyte	Result	Qualifier	PQL	MDL	Unit	D	Prepared	Analyzed	Dil Fac
Sulfate	18		1.0	0.40	mg/L			05/06/15 02:47	1
Chloride	69		1.0	0.40	mg/L			05/06/15 16:40	2

Method: 6010B - Metals (ICP) - Total Recoverable

Analyte	Result	Qualifier	PQL	MDL	Unit	D	Prepared	Analyzed	Dil Fac
Cadmium	0.0010	U	0.0040	0.0010	mg/L		05/04/15 07:23	05/04/15 13:32	1
Iron	3.1		0.20	0.050	mg/L		05/04/15 07:23	05/04/15 13:32	1
Manganese	0.040		0.0040	0.0010	mg/L		05/04/15 07:23	05/04/15 13:32	1
Nickel	0.0020	U	0.0080	0.0020	mg/L		05/04/15 07:23	05/04/15 13:32	1
Zinc	0.031		0.020	0.0050	mg/L		05/04/15 07:23	05/04/15 13:32	1

Method: 7470A - Mercury (CVAA)

Analyte	Result	Qualifier	PQL	MDL	Unit	D	Prepared	Analyzed	Dil Fac
Mercury	0.072	U	0.20	0.072	ug/L		05/04/15 12:20	05/04/15 15:17	1

General Chemistry

Analyte	Result	Qualifier	PQL	MDL	Unit	D	Prepared	Analyzed	Dil Fac
Ammonia as N	0.10	U	0.25	0.10	mg/L			05/05/15 14:50	1
Nitrogen, Kjeldahl	1.2		0.20	0.10	mg/L		05/06/15 08:48	05/07/15 11:25	1
Nitrate Nitrite as N	3.0		0.25	0.050	mg/L			05/05/15 17:28	5
Phosphorus, Total	0.17		0.10	0.041	mg/L		05/06/15 08:48	05/07/15 11:25	1
Total Sulfide	1.0	U	1.0	1.0	mg/L			05/06/15 11:40	1
Color	90		10	10	PCU			05/01/15 12:25	2
pH at time of analysis	6.8		1.0	1.0	SU			05/01/15 12:25	2
Turbidity	21		0.50	0.50	NTU			05/01/15 13:20	1
Alkalinity as CaCO3	39		1.0	1.0	mg/L			05/05/15 05:39	1
Total Dissolved Solids	200		5.0	5.0	mg/L			05/01/15 12:58	1
Total Suspended Solids	34		1.8	1.8	mg/L			05/05/15 09:21	1
pH	6.81	Q			SU			05/01/15 10:45	1
Total Organic Carbon	12		1.0	0.50	mg/L			05/12/15 01:23	1
Nitrogen, Total	4.2		0.25	0.25	mg/L			05/05/15 09:53	1

General Chemistry - Dissolved

Analyte	Result	Qualifier	PQL	MDL	Unit	D	Prepared	Analyzed	Dil Fac
Orthophosphate	0.016		0.010	0.0050	mg/L			05/01/15 11:20	1

Method: 300.0 - Anions, Ion Chromatography

Lab Sample ID: MB 680-381659/2 — **Client Sample ID: Method Blank**
Matrix: Water — **Prep Type: Total/NA**
Analysis Batch: 381659

Analyte	MB Result	MB Qualifier	PQL	MDL	Unit	D	Prepared	Analyzed	Dil Fac
Sulfate	0.40	U	1.0	0.40	mg/L			05/06/15 00:28	1

Lab Sample ID: LCS 680-381659/3 — **Client Sample ID: Lab Control Sample**
Matrix: Water — **Prep Type: Total/NA**
Analysis Batch: 381659

Analyte	Spike Added	LCS Result	LCS Qualifier	Unit	D	%Rec	%Rec. Limits
Sulfate	10.0	10.2		mg/L		102	90 - 110

Lab Sample ID: LCSD 680-381659/4 — **Client Sample ID: Lab Control Sample Dup**
Matrix: Water — **Prep Type: Total/NA**
Analysis Batch: 381659

Analyte	Spike Added	LCSD Result	LCSD Qualifier	Unit	D	%Rec	%Rec. Limits	RPD	RPD Limit
Sulfate	10.0	10.3		mg/L		103	90 - 110	0	30

Lab Sample ID: 660-66645-1 MS — **Client Sample ID: Wheeling PS Base Flow,Lake Clearwater**
Matrix: Water — **Prep Type: Total/NA**
Analysis Batch: 381659

Analyte	Sample Result	Sample Qualifier	Spike Added	MS Result	MS Qualifier	Unit	D	%Rec	%Rec. Limits
Sulfate	18		10.0	27.8		mg/L		97	80 - 120

Lab Sample ID: 660-66645-1 MSD — **Client Sample ID: Wheeling PS Base Flow,Lake Clearwater**
Matrix: Water — **Prep Type: Total/NA**
Analysis Batch: 381659

Analyte	Sample Result	Sample Qualifier	Spike Added	MSD Result	MSD Qualifier	Unit	D	%Rec	%Rec. Limits	RPD	RPD Limit
Sulfate	18		10.0	27.8		mg/L		97	80 - 120	0	30

Lab Sample ID: MB 680-381869/2 — **Client Sample ID: Method Blank**
Matrix: Water — **Prep Type: Total/NA**
Analysis Batch: 381869

Analyte	MB Result	MB Qualifier	PQL	MDL	Unit	D	Prepared	Analyzed	Dil Fac
Chloride	0.20	U	0.50	0.20	mg/L			05/06/15 15:42	1

Lab Sample ID: LCS 680-381869/3 — **Client Sample ID: Lab Control Sample**
Matrix: Water — **Prep Type: Total/NA**
Analysis Batch: 381869

Analyte	Spike Added	LCS Result	LCS Qualifier	Unit	D	%Rec	%Rec. Limits
Chloride	10.0	10.2		mg/L		102	90 - 110

Lab Sample ID: LCSD 680-381869/4 — **Client Sample ID: Lab Control Sample Dup**
Matrix: Water — **Prep Type: Total/NA**
Analysis Batch: 381869

Analyte	Spike Added	LCSD Result	LCSD Qualifier	Unit	D	%Rec	%Rec. Limits	RPD	RPD Limit
Chloride	10.0	10.2		mg/L		102	90 - 110	0	30

QC Sample Results

Client: Tetra Tech, Inc.
Project/Site: Lake Monroe

TestAmerica Job ID: 660-66645-1

Lab Sample ID: 660-66651-O-1 MS
Matrix: Water
Analysis Batch: 381869

Client Sample ID: Matrix Spike
Prep Type: Total/NA

Analyte	Sample Result	Sample Qualifier	Spike Added	MS Result	MS Qualifier	Unit	D	%Rec	%Rec. Limits
Chloride	9.7		100	108		mg/L		99	80 - 120

Lab Sample ID: 660-66651-O-1 MSD
Matrix: Water
Analysis Batch: 381869

Client Sample ID: Matrix Spike Duplicate
Prep Type: Total/NA

Analyte	Sample Result	Sample Qualifier	Spike Added	MSD Result	MSD Qualifier	Unit	D	%Rec	%Rec. Limits	RPD	RPD Limit
Chloride	9.7		100	113		mg/L		104	80 - 120	5	30

Method: 6010B - Metals (ICP)

Lab Sample ID: MB 660-157626/1-A
Matrix: Water
Analysis Batch: 157629

Client Sample ID: Method Blank
Prep Type: Total Recoverable
Prep Batch: 157626

Analyte	MB Result	MB Qualifier	PQL	MDL	Unit	D	Prepared	Analyzed	Dil Fac
Cadmium	0.0010	U	0.0040	0.0010	mg/L		05/04/15 07:23	05/04/15 12:22	1
Iron	0.050	U	0.20	0.050	mg/L		05/04/15 07:23	05/04/15 12:22	1
Manganese	0.00126	I	0.0040	0.0010	mg/L		05/04/15 07:23	05/04/15 12:22	1
Nickel	0.0020	U	0.0080	0.0020	mg/L		05/04/15 07:23	05/04/15 12:22	1
Zinc	0.0050	U	0.020	0.0050	mg/L		05/04/15 07:23	05/04/15 12:22	1

Lab Sample ID: LCS 660-157626/2-A
Matrix: Water
Analysis Batch: 157629

Client Sample ID: Lab Control Sample
Prep Type: Total Recoverable
Prep Batch: 157626

Analyte	Spike Added	LCS Result	LCS Qualifier	Unit	D	%Rec	%Rec. Limits
Cadmium	1.00	1.00		mg/L		100	80 - 120
Iron	1.00	0.965		mg/L		96	80 - 120
Manganese	1.00	1.01		mg/L		101	80 - 120
Nickel	1.00	1.00		mg/L		100	80 - 120
Zinc	1.00	1.03		mg/L		103	80 - 120

Lab Sample ID: 640-51058-A-1-B MS
Matrix: Water
Analysis Batch: 157629

Client Sample ID: Matrix Spike
Prep Type: Total Recoverable
Prep Batch: 157626

Analyte	Sample Result	Sample Qualifier	Spike Added	MS Result	MS Qualifier	Unit	D	%Rec	%Rec. Limits
Cadmium	0.0010	U	1.00	1.04		mg/L		104	80 - 120
Iron	4.7		1.00	5.55		mg/L		84	80 - 120
Manganese	0.060		1.00	1.05		mg/L		99	80 - 120
Nickel	0.0020	U	1.00	0.978		mg/L		98	80 - 120
Zinc	0.0050	U	1.00	1.08		mg/L		108	80 - 120

Lab Sample ID: 640-51058-A-1-C MSD
Matrix: Water
Analysis Batch: 157629

Client Sample ID: Matrix Spike Duplicate
Prep Type: Total Recoverable
Prep Batch: 157626

Analyte	Sample Result	Sample Qualifier	Spike Added	MSD Result	MSD Qualifier	Unit	D	%Rec	%Rec. Limits	RPD	RPD Limit
Cadmium	0.0010	U	1.00	1.04		mg/L		104	80 - 120	0	20
Iron	4.7		1.00	5.58		mg/L		87	80 - 120	1	20

Method: 6010B - Metals (ICP) (Continued)

Lab Sample ID: 640-51058-A-1-C MSD — **Client Sample ID: Matrix Spike Duplicate**
Matrix: Water — **Prep Type: Total Recoverable**
Analysis Batch: 157629 — **Prep Batch: 157626**

Analyte	Sample Result	Sample Qualifier	Spike Added	MSD Result	MSD Qualifier	Unit	D	%Rec	%Rec. Limits	RPD	RPD Limit
Manganese	0.060		1.00	1.04		mg/L		98	80 - 120	1	20
Nickel	0.0020	U	1.00	0.977		mg/L		98	80 - 120	0	20
Zinc	0.0050	U	1.00	1.08		mg/L		108	80 - 120	0	20

Method: 7470A - Mercury (CVAA)

Lab Sample ID: MB 660-157635/13-A — **Client Sample ID: Method Blank**
Matrix: Water — **Prep Type: Total/NA**
Analysis Batch: 157642 — **Prep Batch: 157635**

Analyte	MB Result	MB Qualifier	PQL	MDL	Unit	D	Prepared	Analyzed	Dil Fac
Mercury	0.072	U	0.20	0.072	ug/L		05/04/15 12:20	05/04/15 15:12	1

Lab Sample ID: LCS 660-157635/14-A — **Client Sample ID: Lab Control Sample**
Matrix: Water — **Prep Type: Total/NA**
Analysis Batch: 157642 — **Prep Batch: 157635**

Analyte	Spike Added	LCS Result	LCS Qualifier	Unit	D	%Rec	%Rec. Limits
Mercury	1.40	1.40		ug/L		100	80 - 120

Lab Sample ID: 660-66645-1 MS — **Client Sample ID: Wheeling PS Base Flow,Lake Clearwater**
Matrix: Water — **Prep Type: Total/NA**
Analysis Batch: 157642 — **Prep Batch: 157635**

Analyte	Sample Result	Sample Qualifier	Spike Added	MS Result	MS Qualifier	Unit	D	%Rec	%Rec. Limits
Mercury	0.072	U	1.40	1.41		ug/L		101	80 - 120

Lab Sample ID: 660-66645-1 MSD — **Client Sample ID: Wheeling PS Base Flow,Lake Clearwater**
Matrix: Water — **Prep Type: Total/NA**
Analysis Batch: 157642 — **Prep Batch: 157635**

Analyte	Sample Result	Sample Qualifier	Spike Added	MSD Result	MSD Qualifier	Unit	D	%Rec	%Rec. Limits	RPD	RPD Limit
Mercury	0.072	U	1.40	1.43		ug/L		102	80 - 120	1	20

Method: 350.1 - Nitrogen, Ammonia

Lab Sample ID: MB 680-381676/2 — **Client Sample ID: Method Blank**
Matrix: Water — **Prep Type: Total/NA**
Analysis Batch: 381676

Analyte	MB Result	MB Qualifier	PQL	MDL	Unit	D	Prepared	Analyzed	Dil Fac
Ammonia as N	0.10	U	0.25	0.10	mg/L			05/05/15 13:03	1

Lab Sample ID: LCS 680-381676/17 — **Client Sample ID: Lab Control Sample**
Matrix: Water — **Prep Type: Total/NA**
Analysis Batch: 381676

Analyte	Spike Added	LCS Result	LCS Qualifier	Unit	D	%Rec	%Rec. Limits
Ammonia as N	1.00	1.03		mg/L		103	90 - 110

Method: 350.1 - Nitrogen, Ammonia (Continued)

Lab Sample ID: 640-51074-D-15 MS — **Client Sample ID: Matrix Spike**
Matrix: Water — **Prep Type: Total/NA**
Analysis Batch: 381676

Analyte	Sample Result	Sample Qualifier	Spike Added	MS Result	MS Qualifier	Unit	D	%Rec	%Rec. Limits		
Ammonia as N	130	J3	1.00	129	J3	mg/L		167	90 - 110		

Lab Sample ID: 640-51074-D-15 MSD — **Client Sample ID: Matrix Spike Duplicate**
Matrix: Water — **Prep Type: Total/NA**
Analysis Batch: 381676

Analyte	Sample Result	Sample Qualifier	Spike Added	MSD Result	MSD Qualifier	Unit	D	%Rec	%Rec. Limits	RPD	RPD Limit
Ammonia as N	130	J3	1.00	127	J3	mg/L		40	90 - 110	1	30

Method: 351.2 - Nitrogen, Total Kjeldahl

Lab Sample ID: MB 680-381680/1-A — **Client Sample ID: Method Blank**
Matrix: Water — **Prep Type: Total/NA**
Analysis Batch: 381942 — **Prep Batch: 381680**

Analyte	MB Result	MB Qualifier	PQL	MDL	Unit	D	Prepared	Analyzed	Dil Fac
Nitrogen, Kjeldahl	0.10	U	0.20	0.10	mg/L		05/06/15 08:48	05/07/15 11:10	1

Lab Sample ID: LCS 680-381680/2-A — **Client Sample ID: Lab Control Sample**
Matrix: Water — **Prep Type: Total/NA**
Analysis Batch: 381942 — **Prep Batch: 381680**

Analyte			Spike Added	LCS Result	LCS Qualifier	Unit	D	%Rec	%Rec. Limits		
Nitrogen, Kjeldahl			2.00	2.02		mg/L		101	75 - 125		

Lab Sample ID: 680-112137-D-1-B MS — **Client Sample ID: Matrix Spike**
Matrix: Water — **Prep Type: Total/NA**
Analysis Batch: 381942 — **Prep Batch: 381680**

Analyte	Sample Result	Sample Qualifier	Spike Added	MS Result	MS Qualifier	Unit	D	%Rec	%Rec. Limits		
Nitrogen, Kjeldahl	0.49		2.00	2.46		mg/L		98	75 - 125		

Lab Sample ID: 680-112137-D-1-C MSD — **Client Sample ID: Matrix Spike Duplicate**
Matrix: Water — **Prep Type: Total/NA**
Analysis Batch: 381942 — **Prep Batch: 381680**

Analyte	Sample Result	Sample Qualifier	Spike Added	MSD Result	MSD Qualifier	Unit	D	%Rec	%Rec. Limits	RPD	RPD Limit
Nitrogen, Kjeldahl	0.49		2.00	2.73		mg/L		112	75 - 125	10	40

Lab Sample ID: 680-112137-D-2-B DU — **Client Sample ID: Duplicate**
Matrix: Water — **Prep Type: Total/NA**
Analysis Batch: 381942 — **Prep Batch: 381680**

Analyte	Sample Result	Sample Qualifier		DU Result	DU Qualifier	Unit	D			RPD	RPD Limit
Nitrogen, Kjeldahl	0.65			0.402	J3	mg/L				46	40

Method: 353.2 - Nitrogen, Nitrate-Nitrite

Lab Sample ID: MB 680-381635/13 — **Client Sample ID: Method Blank**
Matrix: Water — **Prep Type: Total/NA**
Analysis Batch: 381635

Analyte	MB Result	MB Qualifier	PQL	MDL	Unit	D	Prepared	Analyzed	Dil Fac
Nitrate Nitrite as N	0.010	U	0.050	0.010	mg/L			05/05/15 16:12	1

Lab Sample ID: LCS 680-381635/15 — **Client Sample ID: Lab Control Sample**
Matrix: Water — **Prep Type: Total/NA**
Analysis Batch: 381635

Analyte	Spike Added	LCS Result	LCS Qualifier	Unit	D	%Rec	%Rec. Limits
Nitrate Nitrite as N	1.00	1.07		mg/L		107	90 - 110

Lab Sample ID: LCSD 680-381635/16 — **Client Sample ID: Lab Control Sample Dup**
Matrix: Water — **Prep Type: Total/NA**
Analysis Batch: 381635

Analyte	Spike Added	LCSD Result	LCSD Qualifier	Unit	D	%Rec	%Rec. Limits	RPD	RPD Limit
Nitrate Nitrite as N	1.00	1.07		mg/L		107	90 - 110	1	10

Lab Sample ID: 640-51065-E-1 MS — **Client Sample ID: Matrix Spike**
Matrix: Water — **Prep Type: Total/NA**
Analysis Batch: 381635

Analyte	Sample Result	Sample Qualifier	Spike Added	MS Result	MS Qualifier	Unit	D	%Rec	%Rec. Limits
Nitrate Nitrite as N	0.010	U	1.00	1.06		mg/L		106	90 - 110

Lab Sample ID: 640-51065-E-1 MSD — **Client Sample ID: Matrix Spike Duplicate**
Matrix: Water — **Prep Type: Total/NA**
Analysis Batch: 381635

Analyte	Sample Result	Sample Qualifier	Spike Added	MSD Result	MSD Qualifier	Unit	D	%Rec	%Rec. Limits	RPD	RPD Limit
Nitrate Nitrite as N	0.010	U	1.00	1.07		mg/L		107	90 - 110	1	10

Method: 365.4 - Phosphorus, Total

Lab Sample ID: MB 680-381680/1-A — **Client Sample ID: Method Blank**
Matrix: Water — **Prep Type: Total/NA**
Analysis Batch: 381941 — **Prep Batch: 381680**

Analyte	MB Result	MB Qualifier	PQL	MDL	Unit	D	Prepared	Analyzed	Dil Fac
Phosphorus, Total	0.041	U	0.10	0.041	mg/L		05/06/15 08:48	05/07/15 11:10	1

Lab Sample ID: LCS 680-381680/2-A — **Client Sample ID: Lab Control Sample**
Matrix: Water — **Prep Type: Total/NA**
Analysis Batch: 381941 — **Prep Batch: 381680**

Analyte	Spike Added	LCS Result	LCS Qualifier	Unit	D	%Rec	%Rec. Limits
Phosphorus, Total	2.00	2.02		mg/L		101	60 - 140

Method: 365.4 - Phosphorus, Total (Continued)

Lab Sample ID: 680-112137-D-1-B MS — **Client Sample ID: Matrix Spike**
Matrix: Water — **Prep Type: Total/NA**
Analysis Batch: 381941 — **Prep Batch: 381680**

Analyte	Sample Result	Sample Qualifier	Spike Added	MS Result	MS Qualifier	Unit	D	%Rec	%Rec. Limits		
Phosphorus, Total	0.074	I	2.00	2.17		mg/L		105	60 - 140		

Lab Sample ID: 680-112137-D-1-C MSD — **Client Sample ID: Matrix Spike Duplicate**
Matrix: Water — **Prep Type: Total/NA**
Analysis Batch: 381941 — **Prep Batch: 381680**

Analyte	Sample Result	Sample Qualifier	Spike Added	MSD Result	MSD Qualifier	Unit	D	%Rec	%Rec. Limits	RPD	RPD Limit
Phosphorus, Total	0.074	I	2.00	2.29		mg/L		111	60 - 140	5	40

Lab Sample ID: 680-112137-D-2-B DU — **Client Sample ID: Duplicate**
Matrix: Water — **Prep Type: Total/NA**
Analysis Batch: 381941 — **Prep Batch: 381680**

Analyte	Sample Result	Sample Qualifier		DU Result	DU Qualifier	Unit	D			RPD	RPD Limit
Phosphorus, Total	0.067	I		0.0730	I	mg/L				9	40

Method: 4500 S2 F-2011 - Sulfide, Total

Lab Sample ID: MB 680-381730/1 — **Client Sample ID: Method Blank**
Matrix: Water — **Prep Type: Total/NA**
Analysis Batch: 381730

Analyte	MB Result	MB Qualifier	PQL	MDL	Unit	D	Prepared	Analyzed	Dil Fac
Total Sulfide	1.0	U	1.0	1.0	mg/L			05/06/15 11:40	1

Lab Sample ID: LCS 680-381730/2 — **Client Sample ID: Lab Control Sample**
Matrix: Water — **Prep Type: Total/NA**
Analysis Batch: 381730

Analyte			Spike Added	LCS Result	LCS Qualifier	Unit	D	%Rec	%Rec. Limits		
Total Sulfide			10.0	12.0		mg/L		120	75 - 125		

Lab Sample ID: LCSD 680-381730/3 — **Client Sample ID: Lab Control Sample Dup**
Matrix: Water — **Prep Type: Total/NA**
Analysis Batch: 381730

Analyte			Spike Added	LCSD Result	LCSD Qualifier	Unit	D	%Rec	%Rec. Limits	RPD	RPD Limit
Total Sulfide			10.0	12.4		mg/L		124	75 - 125	4	30

Lab Sample ID: 640-51074-F-5 DU — **Client Sample ID: Duplicate**
Matrix: Water — **Prep Type: Total/NA**
Analysis Batch: 381730

Analyte	Sample Result	Sample Qualifier		DU Result	DU Qualifier	Unit	D			RPD	RPD Limit
Total Sulfide	1.0	U		1.0	U	mg/L				NC	30

Method: SM 2120B - Color, Colorimetric

Lab Sample ID: MB 660-157611/4 — **Client Sample ID: Method Blank**
Matrix: Water — **Prep Type: Total/NA**
Analysis Batch: 157611

Analyte	MB Result	MB Qualifier	PQL	MDL	Unit	D	Prepared	Analyzed	Dil Fac
Color	5.0	U	5.0	5.0	PCU			05/01/15 12:25	1
pH at time of analysis	6.49		1.0	1.0	SU			05/01/15 12:25	1

Lab Sample ID: LCS 660-157611/5 — **Client Sample ID: Lab Control Sample**
Matrix: Water — **Prep Type: Total/NA**
Analysis Batch: 157611

Analyte	Spike Added	LCS Result	LCS Qualifier	Unit	D	%Rec	%Rec. Limits
Color	30.0	30.0		PCU		100	90 - 110

Lab Sample ID: 660-66645-1 DU — **Client Sample ID: Wheeling PS Base Flow,Lake Clearwater**
Matrix: Water — **Prep Type: Total/NA**
Analysis Batch: 157611

Analyte	Sample Result	Sample Qualifier	DU Result	DU Qualifier	Unit	D	RPD	RPD Limit
Color	90		90.0		PCU		0	20
pH at time of analysis	6.8		6.74		SU		0.1	

Method: SM 2130B - Turbidity

Lab Sample ID: MB 660-157613/2 — **Client Sample ID: Method Blank**
Matrix: Water — **Prep Type: Total/NA**
Analysis Batch: 157613

Analyte	MB Result	MB Qualifier	PQL	MDL	Unit	D	Prepared	Analyzed	Dil Fac
Turbidity	0.50	U	0.50	0.50	NTU			05/01/15 13:20	1

Lab Sample ID: LCS 660-157613/3 — **Client Sample ID: Lab Control Sample**
Matrix: Water — **Prep Type: Total/NA**
Analysis Batch: 157613

Analyte	Spike Added	LCS Result	LCS Qualifier	Unit	D	%Rec	%Rec. Limits
Turbidity	40.0	38.7		NTU		97	90 - 110

Lab Sample ID: 660-66645-1 DU — **Client Sample ID: Wheeling PS Base Flow,Lake Clearwater**
Matrix: Water — **Prep Type: Total/NA**
Analysis Batch: 157613

Analyte	Sample Result	Sample Qualifier	DU Result	DU Qualifier	Unit	D	RPD	RPD Limit
Turbidity	21		21.1		NTU		1	20

Method: SM 2320B - Alkalinity

Lab Sample ID: MB 660-157660/1 — **Client Sample ID: Method Blank**
Matrix: Water — **Prep Type: Total/NA**
Analysis Batch: 157660

Analyte	MB Result	MB Qualifier	PQL	MDL	Unit	D	Prepared	Analyzed	Dil Fac
Alkalinity as CaCO3	1.0	U	1.0	1.0	mg/L			05/05/15 05:39	1

Lab Sample ID: LCS 660-157660/3 — **Client Sample ID: Lab Control Sample**
Matrix: Water — **Prep Type: Total/NA**
Analysis Batch: 157660

Analyte			Spike Added	LCS Result	LCS Qualifier	Unit	D	%Rec	%Rec. Limits		
Alkalinity as CaCO3			118	123		mg/L		104	90 - 110		

Lab Sample ID: 660-66645-1 DU — **Client Sample ID: Wheeling PS Base Flow,Lake Clearwater**
Matrix: Water — **Prep Type: Total/NA**
Analysis Batch: 157660

Analyte	Sample Result	Sample Qualifier		DU Result	DU Qualifier	Unit	D			RPD	RPD Limit
Alkalinity as CaCO3	39			39.7		mg/L				1	30

Method: SM 2540C - Solids, Total Dissolved (TDS)

Lab Sample ID: MB 660-157609/1 — **Client Sample ID: Method Blank**
Matrix: Water — **Prep Type: Total/NA**
Analysis Batch: 157609

Analyte	MB Result	MB Qualifier	PQL	MDL	Unit	D	Prepared	Analyzed	Dil Fac
Total Dissolved Solids	5.0	U	5.0	5.0	mg/L			05/01/15 12:58	1

Lab Sample ID: LCS 660-157609/2 — **Client Sample ID: Lab Control Sample**
Matrix: Water — **Prep Type: Total/NA**
Analysis Batch: 157609

Analyte			Spike Added	LCS Result	LCS Qualifier	Unit	D	%Rec	%Rec. Limits		
Total Dissolved Solids			10000	9430		mg/L		94	80 - 120		

Lab Sample ID: 660-66608-C-1 DU — **Client Sample ID: Duplicate**
Matrix: Water — **Prep Type: Total/NA**
Analysis Batch: 157609

Analyte	Sample Result	Sample Qualifier		DU Result	DU Qualifier	Unit	D			RPD	RPD Limit
Total Dissolved Solids	650			640		mg/L				2	20

Method: SM 2540D - Solids, Total Suspended (TSS)

Lab Sample ID: MB 660-157654/1 — **Client Sample ID: Method Blank**
Matrix: Water — **Prep Type: Total/NA**
Analysis Batch: 157654

Analyte	MB Result	MB Qualifier	PQL	MDL	Unit	D	Prepared	Analyzed	Dil Fac
Total Suspended Solids	5.0	U	5.0	5.0	mg/L			05/05/15 09:21	1

Lab Sample ID: LCS 660-157654/2 — **Client Sample ID: Lab Control Sample**
Matrix: Water — **Prep Type: Total/NA**
Analysis Batch: 157654

Analyte			Spike Added	LCS Result	LCS Qualifier	Unit	D	%Rec	%Rec. Limits		
Total Suspended Solids			100	91.6		mg/L		92	80 - 120		

Method: SM 2540D - Solids, Total Suspended (TSS) (Continued)

Lab Sample ID: 660-66641-B-1 DU — **Client Sample ID: Duplicate**
Matrix: Water — **Prep Type: Total/NA**
Analysis Batch: 157654

Analyte	Sample Result	Sample Qualifier		DU Result	DU Qualifier	Unit	D			RPD	RPD Limit
Total Suspended Solids	650			700		mg/L				7	20

Method: SM 4500 H+ B - pH

Lab Sample ID: LCS 660-157597/1 — **Client Sample ID: Lab Control Sample**
Matrix: Water — **Prep Type: Total/NA**
Analysis Batch: 157597

Analyte			Spike Added	LCS Result	LCS Qualifier	Unit	D	%Rec	%Rec. Limits		
pH			6.00	6.010		SU		100	98 - 102		

Lab Sample ID: 660-66610-B-1 DU — **Client Sample ID: Duplicate**
Matrix: Water — **Prep Type: Total/NA**
Analysis Batch: 157597

Analyte	Sample Result	Sample Qualifier		DU Result	DU Qualifier	Unit	D			RPD	RPD Limit
pH	3.51			3.500		SU				0.3	20

Method: SM 4500 P E - Orthophosphate

Lab Sample ID: MB 660-157614/4 — **Client Sample ID: Method Blank**
Matrix: Water — **Prep Type: Total/NA**
Analysis Batch: 157614

Analyte	MB Result	MB Qualifier	PQL	MDL	Unit	D	Prepared	Analyzed	Dil Fac
Orthophosphate	0.0050	U	0.010	0.0050	mg/L			05/01/15 11:20	1

Lab Sample ID: LCS 660-157614/5 — **Client Sample ID: Lab Control Sample**
Matrix: Water — **Prep Type: Total/NA**
Analysis Batch: 157614

Analyte			Spike Added	LCS Result	LCS Qualifier	Unit	D	%Rec	%Rec. Limits		
Orthophosphate			0.300	0.316		mg/L		105	90 - 110		

Lab Sample ID: 660-66645-1 MS — **Client Sample ID: Wheeling PS Base Flow,Lake Clearwater**
Matrix: Water — **Prep Type: Dissolved**
Analysis Batch: 157614

Analyte	Sample Result	Sample Qualifier	Spike Added	MS Result	MS Qualifier	Unit	D	%Rec	%Rec. Limits		
Orthophosphate	0.016		0.300	0.340		mg/L		108	90 - 110		

Lab Sample ID: 660-66645-1 MSD — **Client Sample ID: Wheeling PS Base Flow,Lake Clearwater**
Matrix: Water — **Prep Type: Dissolved**
Analysis Batch: 157614

Analyte	Sample Result	Sample Qualifier	Spike Added	MSD Result	MSD Qualifier	Unit	D	%Rec	%Rec. Limits	RPD	RPD Limit
Orthophosphate	0.016		0.300	0.347		mg/L		110	90 - 110	2	30

QC Sample Results

Client: Tetra Tech, Inc.
Project/Site: Lake Monroe

TestAmerica Job ID: 660-66645-1

Method: SM 5310B - Organic Carbon, Total (TOC)

Lab Sample ID: MB 400-256822/33
Matrix: Water
Analysis Batch: 256822

Client Sample ID: Method Blank
Prep Type: Total/NA

Analyte	MB Result	MB Qualifier	PQL	MDL	Unit	D	Prepared	Analyzed	Dil Fac
Total Organic Carbon	0.50	U	1.0	0.50	mg/L			05/12/15 00:57	1

Lab Sample ID: LCS 400-256822/34
Matrix: Water
Analysis Batch: 256822

Client Sample ID: Lab Control Sample
Prep Type: Total/NA

Analyte	Spike Added	LCS Result	LCS Qualifier	Unit	D	%Rec	%Rec. Limits
Total Organic Carbon	10.0	11.3		mg/L		113	80 - 120

Lab Sample ID: MRL 400-256822/2
Matrix: Water
Analysis Batch: 256822

Client Sample ID: Lab Control Sample
Prep Type: Total/NA

Analyte	Spike Added	MRL Result	MRL Qualifier	Unit	D	%Rec	%Rec. Limits
Total Organic Carbon	1.00	1.41		mg/L		141	50 - 150

QC Association Summary

Client: Tetra Tech, Inc.
Project/Site: Lake Monroe

TestAmerica Job ID: 660-66645-1

HPLC/IC

Analysis Batch: 381659

Lab Sample ID	Client Sample ID	Prep Type	Matrix	Method	Prep Batch
660-66645-1	Wheeling PS Base Flow,Lake Clearwater	Total/NA	Water	300.0	
660-66645-1 MS	Wheeling PS Base Flow,Lake Clearwater	Total/NA	Water	300.0	
660-66645-1 MSD	Wheeling PS Base Flow,Lake Clearwater	Total/NA	Water	300.0	
LCS 680-381659/3	Lab Control Sample	Total/NA	Water	300.0	
LCSD 680-381659/4	Lab Control Sample Dup	Total/NA	Water	300.0	
MB 680-381659/2	Method Blank	Total/NA	Water	300.0	

Analysis Batch: 381869

Lab Sample ID	Client Sample ID	Prep Type	Matrix	Method	Prep Batch
660-66645-1	Wheeling PS Base Flow,Lake Clearwater	Total/NA	Water	300.0	
660-66651-O-1 MS	Matrix Spike	Total/NA	Water	300.0	
660-66651-O-1 MSD	Matrix Spike Duplicate	Total/NA	Water	300.0	
LCS 680-381869/3	Lab Control Sample	Total/NA	Water	300.0	
LCSD 680-381869/4	Lab Control Sample Dup	Total/NA	Water	300.0	
MB 680-381869/2	Method Blank	Total/NA	Water	300.0	

Metals

Prep Batch: 157626

Lab Sample ID	Client Sample ID	Prep Type	Matrix	Method	Prep Batch
640-51058-A-1-B MS	Matrix Spike	Total Recoverable	Water	3005A	
640-51058-A-1-C MSD	Matrix Spike Duplicate	Total Recoverable	Water	3005A	
660-66645-1	Wheeling PS Base Flow,Lake Clearwater	Total Recoverable	Water	3005A	
LCS 660-157626/2-A	Lab Control Sample	Total Recoverable	Water	3005A	
MB 660-157626/1-A	Method Blank	Total Recoverable	Water	3005A	

Analysis Batch: 157629

Lab Sample ID	Client Sample ID	Prep Type	Matrix	Method	Prep Batch
640-51058-A-1-B MS	Matrix Spike	Total Recoverable	Water	6010B	157626
640-51058-A-1-C MSD	Matrix Spike Duplicate	Total Recoverable	Water	6010B	157626
660-66645-1	Wheeling PS Base Flow,Lake Clearwater	Total Recoverable	Water	6010B	157626
LCS 660-157626/2-A	Lab Control Sample	Total Recoverable	Water	6010B	157626
MB 660-157626/1-A	Method Blank	Total Recoverable	Water	6010B	157626

Prep Batch: 157635

Lab Sample ID	Client Sample ID	Prep Type	Matrix	Method	Prep Batch
660-66645-1	Wheeling PS Base Flow,Lake Clearwater	Total/NA	Water	7470A	
660-66645-1 MS	Wheeling PS Base Flow,Lake Clearwater	Total/NA	Water	7470A	
660-66645-1 MSD	Wheeling PS Base Flow,Lake Clearwater	Total/NA	Water	7470A	
LCS 660-157635/14-A	Lab Control Sample	Total/NA	Water	7470A	
MB 660-157635/13-A	Method Blank	Total/NA	Water	7470A	

Analysis Batch: 157642

Lab Sample ID	Client Sample ID	Prep Type	Matrix	Method	Prep Batch
660-66645-1	Wheeling PS Base Flow,Lake Clearwater	Total/NA	Water	7470A	157635
660-66645-1 MS	Wheeling PS Base Flow,Lake Clearwater	Total/NA	Water	7470A	157635
660-66645-1 MSD	Wheeling PS Base Flow,Lake Clearwater	Total/NA	Water	7470A	157635
LCS 660-157635/14-A	Lab Control Sample	Total/NA	Water	7470A	157635
MB 660-157635/13-A	Method Blank	Total/NA	Water	7470A	157635

QC Association Summary

Client: Tetra Tech, Inc.
Project/Site: Lake Monroe

TestAmerica Job ID: 660-66645-1

General Chemistry

Analysis Batch: 157597

Lab Sample ID	Client Sample ID	Prep Type	Matrix	Method	Prep Batch
660-66610-B-1 DU	Duplicate	Total/NA	Water	SM 4500 H+ B	
660-66645-1	Wheeling PS Base Flow,Lake Clearwater	Total/NA	Water	SM 4500 H+ B	
LCS 660-157597/1	Lab Control Sample	Total/NA	Water	SM 4500 H+ B	

Analysis Batch: 157609

Lab Sample ID	Client Sample ID	Prep Type	Matrix	Method	Prep Batch
660-66608-C-1 DU	Duplicate	Total/NA	Water	SM 2540C	
660-66645-1	Wheeling PS Base Flow,Lake Clearwater	Total/NA	Water	SM 2540C	
LCS 660-157609/2	Lab Control Sample	Total/NA	Water	SM 2540C	
MB 660-157609/1	Method Blank	Total/NA	Water	SM 2540C	

Analysis Batch: 157611

Lab Sample ID	Client Sample ID	Prep Type	Matrix	Method	Prep Batch
660-66645-1	Wheeling PS Base Flow,Lake Clearwater	Total/NA	Water	SM 2120B	
660-66645-1 DU	Wheeling PS Base Flow,Lake Clearwater	Total/NA	Water	SM 2120B	
LCS 660-157611/5	Lab Control Sample	Total/NA	Water	SM 2120B	
MB 660-157611/4	Method Blank	Total/NA	Water	SM 2120B	

Analysis Batch: 157613

Lab Sample ID	Client Sample ID	Prep Type	Matrix	Method	Prep Batch
660-66645-1	Wheeling PS Base Flow,Lake Clearwater	Total/NA	Water	SM 2130B	
660-66645-1 DU	Wheeling PS Base Flow,Lake Clearwater	Total/NA	Water	SM 2130B	
LCS 660-157613/3	Lab Control Sample	Total/NA	Water	SM 2130B	
MB 660-157613/2	Method Blank	Total/NA	Water	SM 2130B	

Analysis Batch: 157614

Lab Sample ID	Client Sample ID	Prep Type	Matrix	Method	Prep Batch
660-66645-1	Wheeling PS Base Flow,Lake Clearwater	Dissolved	Water	SM 4500 P E	
660-66645-1 MS	Wheeling PS Base Flow,Lake Clearwater	Dissolved	Water	SM 4500 P E	
660-66645-1 MSD	Wheeling PS Base Flow,Lake Clearwater	Dissolved	Water	SM 4500 P E	
LCS 660-157614/5	Lab Control Sample	Total/NA	Water	SM 4500 P E	
MB 660-157614/4	Method Blank	Total/NA	Water	SM 4500 P E	

Analysis Batch: 157654

Lab Sample ID	Client Sample ID	Prep Type	Matrix	Method	Prep Batch
660-66641-B-1 DU	Duplicate	Total/NA	Water	SM 2540D	
660-66645-1	Wheeling PS Base Flow,Lake Clearwater	Total/NA	Water	SM 2540D	
LCS 660-157654/2	Lab Control Sample	Total/NA	Water	SM 2540D	
MB 660-157654/1	Method Blank	Total/NA	Water	SM 2540D	

Analysis Batch: 157660

Lab Sample ID	Client Sample ID	Prep Type	Matrix	Method	Prep Batch
660-66645-1	Wheeling PS Base Flow,Lake Clearwater	Total/NA	Water	SM 2320B	
660-66645-1 DU	Wheeling PS Base Flow,Lake Clearwater	Total/NA	Water	SM 2320B	
LCS 660-157660/3	Lab Control Sample	Total/NA	Water	SM 2320B	
MB 660-157660/1	Method Blank	Total/NA	Water	SM 2320B	

Analysis Batch: 256822

Lab Sample ID	Client Sample ID	Prep Type	Matrix	Method	Prep Batch
660-66645-1	Wheeling PS Base Flow,Lake Clearwater	Total/NA	Water	SM 5310B	
LCS 400-256822/34	Lab Control Sample	Total/NA	Water	SM 5310B	

General Chemistry (Continued)

Analysis Batch: 256822 (Continued)

Lab Sample ID	Client Sample ID	Prep Type	Matrix	Method	Prep Batch
MB 400-256822/33	Method Blank	Total/NA	Water	SM 5310B	
MRL 400-256822/2	Lab Control Sample	Total/NA	Water	SM 5310B	

Analysis Batch: 381500

Lab Sample ID	Client Sample ID	Prep Type	Matrix	Method	Prep Batch
660-66645-1	Wheeling PS Base Flow,Lake Clearwater	Total/NA	Water	Total Nitrogen	

Analysis Batch: 381635

Lab Sample ID	Client Sample ID	Prep Type	Matrix	Method	Prep Batch
640-51065-E-1 MS	Matrix Spike	Total/NA	Water	353.2	
640-51065-E-1 MSD	Matrix Spike Duplicate	Total/NA	Water	353.2	
660-66645-1	Wheeling PS Base Flow,Lake Clearwater	Total/NA	Water	353.2	
LCS 680-381635/15	Lab Control Sample	Total/NA	Water	353.2	
LCSD 680-381635/16	Lab Control Sample Dup	Total/NA	Water	353.2	
MB 680-381635/13	Method Blank	Total/NA	Water	353.2	

Analysis Batch: 381676

Lab Sample ID	Client Sample ID	Prep Type	Matrix	Method	Prep Batch
640-51074-D-15 MS	Matrix Spike	Total/NA	Water	350.1	
640-51074-D-15 MSD	Matrix Spike Duplicate	Total/NA	Water	350.1	
660-66645-1	Wheeling PS Base Flow,Lake Clearwater	Total/NA	Water	350.1	
LCS 680-381676/17	Lab Control Sample	Total/NA	Water	350.1	
MB 680-381676/2	Method Blank	Total/NA	Water	350.1	

Prep Batch: 381680

Lab Sample ID	Client Sample ID	Prep Type	Matrix	Method	Prep Batch
660-66645-1	Wheeling PS Base Flow,Lake Clearwater	Total/NA	Water	Digestion	
680-112137-D-1-B MS	Matrix Spike	Total/NA	Water	Digestion	
680-112137-D-1-C MSD	Matrix Spike Duplicate	Total/NA	Water	Digestion	
680-112137-D-2-B DU	Duplicate	Total/NA	Water	Digestion	
LCS 680-381680/2-A	Lab Control Sample	Total/NA	Water	Digestion	
MB 680-381680/1-A	Method Blank	Total/NA	Water	Digestion	

Analysis Batch: 381730

Lab Sample ID	Client Sample ID	Prep Type	Matrix	Method	Prep Batch
640-51074-F-5 DU	Duplicate	Total/NA	Water	4500 S2 F-2011	
660-66645-1	Wheeling PS Base Flow,Lake Clearwater	Total/NA	Water	4500 S2 F-2011	
LCS 680-381730/2	Lab Control Sample	Total/NA	Water	4500 S2 F-2011	
LCSD 680-381730/3	Lab Control Sample Dup	Total/NA	Water	4500 S2 F-2011	
MB 680-381730/1	Method Blank	Total/NA	Water	4500 S2 F-2011	

Analysis Batch: 381941

Lab Sample ID	Client Sample ID	Prep Type	Matrix	Method	Prep Batch
660-66645-1	Wheeling PS Base Flow,Lake Clearwater	Total/NA	Water	365.4	381680
680-112137-D-1-B MS	Matrix Spike	Total/NA	Water	365.4	381680
680-112137-D-1-C MSD	Matrix Spike Duplicate	Total/NA	Water	365.4	381680
680-112137-D-2-B DU	Duplicate	Total/NA	Water	365.4	381680
LCS 680-381680/2-A	Lab Control Sample	Total/NA	Water	365.4	381680
MB 680-381680/1-A	Method Blank	Total/NA	Water	365.4	381680

QC Association Summary

Client: Tetra Tech, Inc.
Project/Site: Lake Monroe

TestAmerica Job ID: 660-66645-1

General Chemistry (Continued)

Analysis Batch: 381942

Lab Sample ID	Client Sample ID	Prep Type	Matrix	Method	Prep Batch
660-66645-1	Wheeling PS Base Flow,Lake Clearwater	Total/NA	Water	351.2	381680
680-112137-D-1-B MS	Matrix Spike	Total/NA	Water	351.2	381680
680-112137-D-1-C MSD	Matrix Spike Duplicate	Total/NA	Water	351.2	381680
680-112137-D-2-B DU	Duplicate	Total/NA	Water	351.2	381680
LCS 680-381680/2-A	Lab Control Sample	Total/NA	Water	351.2	381680
MB 680-381680/1-A	Method Blank	Total/NA	Water	351.2	381680

Lab Chronicle

Client: Tetra Tech, Inc.
Project/Site: Lake Monroe

TestAmerica Job ID: 660-66645-1

Client Sample ID: Wheeling PS Base Flow,Lake Clearwater

Lab Sample ID: 660-66645-1

Date Collected: 04/30/15 10:25

Matrix: Water

Date Received: 05/01/15 09:05

Prep Type	Batch Type	Batch Method	Run	Dilution Factor	Batch Number	Prepared or Analyzed	Analyst	Lab
Total/NA	Analysis	300.0		1	381659	05/06/15 02:47	DAS	TAL SAV
Total/NA	Analysis	300.0		2	381869	05/06/15 16:40	DAS	TAL SAV
Total Recoverable	Prep	3005A			157626	05/04/15 07:23	ALQ	TAL TAM
Total Recoverable	Analysis	6010B		1	157629	05/04/15 13:32	GAF	TAL TAM
Total/NA	Prep	7470A			157635	05/04/15 12:20	GH1	TAL TAM
Total/NA	Analysis	7470A		1	157642	05/04/15 15:17	GH1	TAL TAM
Total/NA	Analysis	350.1		1	381676	05/05/15 14:50	JME	TAL SAV
Total/NA	Prep	Digestion			381680	05/06/15 08:48	JRJ	TAL SAV
Total/NA	Analysis	351.2		1	381942	05/07/15 11:25	JER	TAL SAV
Total/NA	Analysis	353.2		5	381635	05/05/15 17:28	GRX	TAL SAV
Total/NA	Prep	Digestion			381680	05/06/15 08:48	JRJ	TAL SAV
Total/NA	Analysis	365.4		1	381941	05/07/15 11:25	JER	TAL SAV
Total/NA	Analysis	4500 S2 F-2011		1	381730	05/06/15 11:40	JRJ	TAL SAV
Total/NA	Analysis	SM 2120B		2	157611	05/01/15 12:25	AJG	TAL TAM
Total/NA	Analysis	SM 2130B		1	157613	05/01/15 13:20	ELE	TAL TAM
Total/NA	Analysis	SM 2320B		1	157660	05/05/15 05:39	AJG	TAL TAM
Total/NA	Analysis	SM 2540C		1	157609	05/01/15 12:58	SC1	TAL TAM
Total/NA	Analysis	SM 2540D		1	157654	05/05/15 09:21	SC1	TAL TAM
Total/NA	Analysis	SM 4500 H+ B		1	157597	05/01/15 10:45	AJG	TAL TAM
Dissolved	Analysis	SM 4500 P E		1	157614	05/01/15 11:20	ELE	TAL TAM
Total/NA	Analysis	SM 5310B		1	256822	05/12/15 01:23	JMH	TAL PEN
Total/NA	Analysis	Total Nitrogen		1	381500	05/05/15 09:53	JER	TAL SAV

Laboratory References:

ENCO = ENCO-Orlando, 10775 Central Port Drive, Orlando, FL 32824, TEL (407)826-5314
TAL PEN = TestAmerica Pensacola, 3355 McLemore Drive, Pensacola, FL 32514, TEL (850)474-1001
TAL SAV = TestAmerica Savannah, 5102 LaRoche Avenue, Savannah, GA 31404, TEL (912)354-7858
TAL TAM = TestAmerica Tampa, 6712 Benjamin Road, Suite 100, Tampa, FL 33634, TEL (813)885-7427

Method Summary

Client: Tetra Tech, Inc.
Project/Site: Lake Monroe

TestAmerica Job ID: 660-66645-1

Method	Method Description	Protocol	Laboratory
300.0	Anions, Ion Chromatography	MCAWW	TAL SAV
6010B	Metals (ICP)	SW846	TAL TAM
7470A	Mercury (CVAA)	SW846	TAL TAM
350.1	Nitrogen, Ammonia	MCAWW	TAL SAV
351.2	Nitrogen, Total Kjeldahl	MCAWW	TAL SAV
353.2	Nitrogen, Nitrate-Nitrite	MCAWW	TAL SAV
365.4	Phosphorus, Total	EPA	TAL SAV
4500 S2 F-2011	Sulfide, Total	SM	TAL SAV
SM 2120B	Color, Colorimetric	SM	TAL TAM
SM 2130B	Turbidity	SM	TAL TAM
SM 2320B	Alkalinity	SM	TAL TAM
SM 2540C	Solids, Total Dissolved (TDS)	SM	TAL TAM
SM 2540D	Solids, Total Suspended (TSS)	SM	TAL TAM
SM 4500 H+ B	pH	SM	TAL TAM
SM 4500 P E	Orthophosphate	SM	TAL TAM
SM 5310B	Organic Carbon, Total (TOC)	SM	TAL PEN
Total Nitrogen	Nitrogen, Total	EPA	TAL SAV
Chlorophyll A ug/L	Chlorophyll A	NONE	ENCO
Fecal Coliform	SM 9222D Fecal Coliform by MF	NONE	ENCO

Protocol References:

EPA = US Environmental Protection Agency
MCAWW = "Methods For Chemical Analysis Of Water And Wastes", EPA-600/4-79-020, March 1983 And Subsequent Revisions.
NONE = NONE
SM = "Standard Methods For The Examination Of Water And Wastewater",
SW846 = "Test Methods For Evaluating Solid Waste, Physical/Chemical Methods", Third Edition, November 1986 And Its Updates.

Laboratory References:

ENCO = ENCO-Orlando, 10775 Central Port Drive, Orlando, FL 32824, TEL (407)826-5314
TAL PEN = TestAmerica Pensacola, 3355 McLemore Drive, Pensacola, FL 32514, TEL (850)474-1001
TAL SAV = TestAmerica Savannah, 5102 LaRoche Avenue, Savannah, GA 31404, TEL (912)354-7858
TAL TAM = TestAmerica Tampa, 6712 Benjamin Road, Suite 100, Tampa, FL 33634, TEL (813)885-7427

Certification Summary

Client: Tetra Tech, Inc.
Project/Site: Lake Monroe

TestAmerica Job ID: 660-66645-1

Laboratory: TestAmerica Tampa

Unless otherwise noted, all analytes for this laboratory were covered under each certification below.

Authority	Program	EPA Region	Certification ID	Expiration Date
Florida	NELAP	4	E84282	06-30-15 *

The following analytes are included in this report, but are not certified under this certification:

Analysis Method	Prep Method	Matrix	Analyte
SM 2120B		Water	pH at time of analysis

Laboratory: TestAmerica Pensacola

All certifications held by this laboratory are listed. Not all certifications are applicable to this report.

Authority	Program	EPA Region	Certification ID	Expiration Date
Alabama	State Program	4	40150	06-30-15
Arizona	State Program	9	AZ0710	01-11-16
Arkansas DEQ	State Program	6	88-0689	09-01-15
Florida	NELAP	4	E81010	06-30-15
Georgia	State Program	4	N/A	06-30-15
Illinois	NELAP	5	200041	10-09-15
Iowa	State Program	7	367	07-31-16
Kansas	NELAP	7	E-10253	05-31-15 *
Kentucky (UST)	State Program	4	53	06-30-15
Kentucky (WW)	State Program	4	98030	12-31-15
Louisiana	NELAP	6	30976	06-30-15
Maryland	State Program	3	233	09-30-15
Massachusetts	State Program	1	M-FL094	06-30-15
Michigan	State Program	5	9912	06-30-15
New Jersey	NELAP	2	FL006	06-30-15
North Carolina (WW/SW)	State Program	4	314	12-31-15
Oklahoma	State Program	6	9810	08-31-15
Pennsylvania	NELAP	3	68-00467	01-31-16
Rhode Island	State Program	1	LAO00307	12-30-15
South Carolina	State Program	4	96026	06-30-15
Tennessee	State Program	4	TN02907	06-30-15
Texas	NELAP	6	T104704286-12-5	09-30-15
USDA	Federal		P330-13-00193	07-01-16
Virginia	NELAP	3	460166	06-14-15
West Virginia DEP	State Program	3	136	06-30-15

Laboratory: TestAmerica Savannah

Unless otherwise noted, all analytes for this laboratory were covered under each certification below.

Authority	Program	EPA Region	Certification ID	Expiration Date
Florida	NELAP	4	E87052	06-30-15

The following analytes are included in this report, but certification is not offered by the governing authority:

Analysis Method	Prep Method	Matrix	Analyte
Total Nitrogen		Water	Nitrogen, Total

* Certification renewal pending - certification considered valid.

ENCO Laboratories

Accurate. Timely. Responsive. Innovative.

10775 Central Port Drive
Orlando FL, 32824
Phone: 407.826.5314 FAX: 407.850.6945

Thursday, May 7, 2015
Test America - Tampa (TE022)
Attn: Nancy Robertson
6712 Benjamin Road, Suite 100
Tampa, FL 33634

RE: Laboratory Results for
Project Number: 660-66645, Project Name/Desc: Test America -
ENCO Workorder(s): A502671

Dear Nancy Robertson,

Enclosed is a copy of your laboratory report for test samples received by our laboratory on Thursday, April 30, 2015.

Unless otherwise noted in an attached project narrative, all samples were received in acceptable condition and processed in accordance with the referenced methods/procedures. Results for these procedures apply only to the samples as submitted.

The analytical results contained in this report are in compliance with NELAC standards, except as noted in the project narrative. This report shall not be reproduced except in full, without the written approval of the Laboratory.

This report contains only those analyses performed by Environmental Conservation Laboratories. Unless otherwise noted, all analyses were performed at ENCO Orlando. Data from outside organizations will be reported under separate cover.

If you have any questions or require further information, please do not hesitate to contact me.

Sincerely,

Ronald Wambles For David Camacho

Project Manager

Enclosure(s)

SAMPLE SUMMARY/LABORATORY CHRONICLE

Client ID: P.S. Sample **Lab ID: A502671-01** **Sampled: 04/30/15 10:25** **Received: 04/30/15 15:12**

Parameter	Hold Date/Time(s)				Prep Date/Time(s)		Analysis Date/Time(s)	
SM 10200H-2001	05/02/15	10:25	05/14/15		04/30/15	16:15	05/07/15	10:44
SM 9222D-1997	04/30/15	16:25	05/01/15	15:45	04/30/15	15:45	05/01/15	15:00

This report relates only to the sample as received by the laboratory, and may only be reproduced in full.

SAMPLE DETECTION SUMMARY

Client ID: P.S. Sample **Lab ID:** A502671-01

Analyte	Results	Flag	MDL	PQL	Units	Method	Notes
Chlorophyll a	1.6		0.50	0.50	mg/m3	SM 10200H-2001	
Chlorophyll a (Uncorrected)	4.2		0.50	0.50	mg/m3	SM 10200H-2001	
Coliform, Fecal	11		1	1	CFU/100 ml	SM 9222D-1997	

This report relates only to the sample as received by the laboratory, and may only be reproduced in full.

www.encolabs.com

ANALYTICAL RESULTS

Description:	P.S. Sample	**Lab Sample ID:**	A502671-01	**Received:**	04/30/15 15:12
Matrix:	Surface Water	**Sampled:**	04/30/15 10:25	**Work Order:**	A502671
Project:	Test America -	**Sampled By:**			

Classical Chemistry Parameters

^ - ENCO Orlando certified analyte [NELAC E83182]

Analyte [CAS Number]	Results	Flag	Units	DF	MDL	PQL	Batch	Method	Analyzed	By	Notes
Chlorophyll a [42617-16-3]^	**1.6**		mg/m3	1	0.50	0.50	5D30022	SM 10200H-2001	05/07/15 10:44	M1N	
Chlorophyll a (Uncorrected) [42617-16-3]^	**4.2**		mg/m3	1	0.50	0.50	5D30022	SM 10200H-2001	05/07/15 10:44	M1N	

Microbiological Parameters

^ - ENCO Orlando certified analyte [NELAC E83182]

Analyte [CAS Number]	Results	Flag	Units	DF	MDL	PQL	Batch	Method	Analyzed	By	Notes
Coliform, Fecal^	**11**		CFU/100 ml	1	1	1	5D30031	SM 9222D-1997	05/01/15 15:00	M1N	

QUALITY CONTROL DATA

Classical Chemistry Parameters - Quality Control

Batch 5D30022 - NO PREP

Blank (5D30022-BLK1) Prepared: 04/30/2015 10:00 Analyzed: 05/07/2015 10:44

Analyte	Result	Flag	PQL	Units	Spike Level	Source Result	%REC	%REC Limits	RPD	RPD Limit	Notes
Chlorophyll a	0.50	U	0.50	mg/m3							
Chlorophyll a (Uncorrected)	0.50	U	0.50	mg/m3							

Duplicate (5D30022-DUP1) Prepared: 04/30/2015 10:00 Analyzed: 05/07/2015 10:44

Source: A501980-03

Analyte	Result	Flag	PQL	Units	Spike Level	Source Result	%REC	%REC Limits	RPD	RPD Limit	Notes
Chlorophyll a	100		0.50	mg/m3		81			25	25	
Chlorophyll a (Uncorrected)	110		0.50	mg/m3		110			0.05	25	

Microbiological Parameters - Quality Control

Batch 5D30031 - NO PREP

Blank (5D30031-BLK1) Prepared: 04/30/2015 15:00 Analyzed: 05/01/2015 15:00

Analyte	Result	Flag	PQL	Units	Spike Level	Source Result	%REC	%REC Limits	RPD	RPD Limit	Notes
Coliform, Fecal	**Absent**	**U**	1	CFU/100 ml							

Duplicate (5D30031-DUP1) Prepared: 04/30/2015 15:00 Analyzed: 05/01/2015 15:00

Source: A502663-01

Analyte	Result	Flag	PQL	Units	Spike Level	Source Result	%REC	%REC Limits	RPD	RPD Limit	Notes
Coliform, Fecal	<1	U	1	CFU/100 ml		1 U				25	

FLAGS/NOTES AND DEFINITIONS

PQL	PQL: Practical Quantitation Limit.
B	Results are based upon membrane filter colony counts that are outside the method indicated ideal range.
I	The reported value is between the laboratory method detection limit (MDL) and the practical quantitation limit (PQL).
J	Estimated value.
K	Off-scale low; Actual value is known to be less than the value given.
L	Off-scale high; Actual value is known to be greater than value given.
M	Presence of analyte is verified but not quantified; the actual value is less than the MRL but greater than the MDL.
N	Presumptive evidence of presence of material.
O	Sampled, but analysis lost or not performed.
Q	Sample exceeded the accepted holding time.
T	Value reported is less than the laboratory method detection limit. The value is reported for informational purposes only and shall not be used in statistical analysis.
U	Indicates that the compound was analyzed for but not detected.
V	Indicates that the analyte was detected in both the sample and the associated method blank.
Y	The laboratory analysis was from an improperly preserved sample. The data may not be accurate.
Z	Too many colonies were present (TNTC); the numeric value represents the filtration volume.
?	Data are rejected and should not be used. Some or all of the quality control data for the analyte were outside criteria, and the presence or absence of the analyte cannot be determined from the data.
*****	Not reported due to interference.

TestAmerica Tampa
6712 Benjamin Road
Suite 100
Tampa, FL 33634
Phone: 813.885.7427 Fax:

Contact Nancy Robertson PM

Chain of Custody Record

024501

TestAmerica
THE LEADER IN ENVIRONMENTAL TESTING
TestAmerica Laboratories, Inc.
TAL-8210 (0713)

Regulatory Program: ☐ Dw ☐ NPDES ☐ RCRA ☐ Other:

Client Contact	Project Manager: Nancy Robertson	Site Contact:	Date: 4/30/15	COC No:
Company Name: ENCO	Tel/Fax:	Lab Contact:	Carrier:	____ of ____ COCs
Address:	Analysis Turnaround Time			Sampler:
City/State/Zip: Orlando	☐ CALENDAR DAYS ☐ WORKING DAYS			For Lab Use Only:
Phone:	TAT if different from Below ____			Walk-in Client:
Fax:	☐ 2 weeks			Lab Sampling:
Project Name: P.S. Sample	☐ 1 week			
Site:	☐ 2 days			Job / SDG No.:
PO #Block# 66008532	☐ 1 day			

Sample Identification	Sample Date	Sample Time	Sample Type (C=Comp, G=Grab)	Matrix	# of Cont.	Filtered Sample (Y / N)	Perform MS / MSD (Y / N)	Fecal Coliform	Chl. a	Sample Specific Notes:
P.S. Sample	4/30/15	1025	G	SW	4			✓	✓	A502671

Preservation Used: 1= Ice, 2= HCl; 3= H2SO4; 4=HNO3; 5=NaOH; 6= Other ____

Possible Hazard Identification:
Are any samples from a listed EPA Hazardous Waste? Please List any EPA Waste Codes for the sample in the Comments Section if the lab is to dispose of the sample.
☐ Non-Hazard ☐ Flammable ☐ Skin Irritant ☐ Poison B ☐ Unknown

Sample Disposal (A fee may be assessed if samples are retained longer than 1 month)
☐ Return to Client ☐ Disposal by Lab ☐ Archive for ____ Months

Special Instructions/QC Requirements & Comments:

Custody Seals Intact: ☐ Yes ☐ No | Custody Seal No.: | Cooler Temp. (°C): Obs'd: ____ Corr'd: ____ | Therm ID No.: ____

Relinquished by:	Company:	Date/Time:	Received by:	Company:	Date/Time:
[signature]	TA Orl	4/30/15 1512	[signature]		04/30/15 1512
Relinquished by:	Company:	Date/Time:	Received by: Brandy Hall	Company: ENCO	Date/Time: 4/30/15 1512
Relinquished by:	Company:	Date/Time:	Received in Laboratory by:	Company:	Date/Time:

Client Cooler 2.3°C

TestAmerica Tampa
6712 Benjamin Road Suite 100
Tampa, FL 33634
Phone (813) 885-7427 Fax (813) 885-7049

Chain of Custody Record

TestAmerica
THE LEADER IN ENVIRONMENTAL TESTING

5/14/2015

Client Information	Sampler	Lab PM: Robertson, Nancy	Carrier Tracking No(s):	COC No: 660-62066-19927.1
Client Contact: Rasesh Shah	Phone:	E-Mail: nancy.robertson@testamericainc.com		Page: Page 1 of 1
Company: Tetra Tech, Inc.				Job #:
Address: 201 E. Pine St , Ste. 1000	Due Date Requested:			
City: Orlando	TAT Requested (days):			
State, Zip: FL, 32801				
Phone:	PO #: Purchase Order Requested			
Email: rasesh.shah@tetratech.com	WO #:			
Project Name: Lake Monroe	Project #: 66008532			
Site:	SSOW#:			

Analysis Requested

Preservation Codes:
A - HCL, B - NaOH, C - Zn Acetate, D - Nitric Acid, E - NaHSO4, F - MeOH, G - Amchlor, H - Ascorbic Acid, I - Ice, J - DI Water, K - EDTA, L - EDA
M - Hexane, N - None, O - AsNaO2, P - Na2O4S, Q - Na2SO3, R - Na2S2SO3, S - H2SO4, T - TSP Dodecahydrate, U - Acetone, V - MCAA, W - ph 4-5, Z - other (specify)
Other:

Sample Identification	Sample Date	Sample Time	Sample Type (C=comp, G=grab)	Matrix (W=water, S=solid, O=waste/oil, BT=Tissue, A=Air)	Field Filtered Sample (Yes or No)	Perform MS/MSD (Yes or No)	2540C, 2540D	2320B, SM2130B, SM4500_H+	4500_P_E_Ortho - Orthophosphate	6010B, 7470A	2120B - Color	SUBCONTRACT - Chlorophyll A ug/L	9222D - Coliform, Fecal	300_ORGFM_28D - Chloride & Sulfate	350.1 - Ammonia as N	SM4500_S2_F - Total Sulfide	351.2, 353.2_Pres, 365.4, Nitrogen,Total	SM5310_TOC_B - Total Organic Carbon	Total Number of containers	Special Instructions/Note:
			Preservation Code:				N	N	N	D	N	N	R	N	S	CB	S	S		
P.S. SAMPLE (DATE UNKNOWN)	4-30-15	10:25	G	Water			X	X	X	X	X	X	X	X	X	X	X	X		

660-66645 Chain of Custody

Loc: 660
66645

Possible Hazard Identification
☐ Non-Hazard ☐ Flammable ☐ Skin Irritant ☐ Poison B ☐ Unknown ☐ Radiological

Sample Disposal (A fee may be assessed if samples are retained longer than 1 month)
☐ Return To Client ☐ Disposal By Lab ☐ Archive For _____ Months

Deliverable Requested: I, II, III, IV, Other (specify)

Special Instructions/QC Requirements:

Empty Kit Relinquished by: Jennifer Bates	Date: 4-8-15	Time: 1245	Method of Shipment: Lab courier

Relinquished by	Date/Time	Company	Received by	Date/Time	Company
[illegible]	4-30-15 / 10:40	TT DELAND	[illegible]	4-30-15 1115	TA Orlando
[illegible]	4-30-15 @ 1532	TT ORL	[illegible]	5-1-15 0905	TA TPA

Custody Seals Intact: Δ Yes Δ No	Custody Seal No.:	Cooler Temperature(s) °C and Other Remarks: 1.8/1.3 cw-09

Login Sample Receipt Checklist

Client: Tetra Tech, Inc.

Job Number: 660-66645-1

Login Number: 66645
List Number: 1
Creator: Southers, Kristin B

List Source: TestAmerica Tampa

Question	Answer	Comment
Radioactivity wasn't checked or is </= background as measured by a survey meter.	N/A	
The cooler's custody seal, if present, is intact.	True	
Sample custody seals, if present, are intact.	True	
The cooler or samples do not appear to have been compromised or tampered with.	True	
Samples were received on ice.	True	
Cooler Temperature is acceptable.	True	
Cooler Temperature is recorded.	True	
COC is present.	True	
COC is filled out in ink and legible.	True	
COC is filled out with all pertinent information.	True	
Is the Field Sampler's name present on COC?	True	
There are no discrepancies between the containers received and the COC.	True	
Samples are received within Holding Time.	True	
Sample containers have legible labels.	True	
Containers are not broken or leaking.	True	
Sample collection date/times are provided.	True	
Appropriate sample containers are used.	True	
Sample bottles are completely filled.	True	
Sample Preservation Verified.	True	
There is sufficient vol. for all requested analyses, incl. any requested MS/MSDs	True	
Containers requiring zero headspace have no headspace or bubble is <6mm (1/4").	N/A	
Multiphasic samples are not present.	True	
Samples do not require splitting or compositing.	True	
Residual Chlorine Checked.	N/A	

Login Sample Receipt Checklist

Client: Tetra Tech, Inc.

Job Number: 660-66645-1

Login Number: 66645
List Number: 4
Creator: Menoher, Rachel C

List Source: TestAmerica Pensacola
List Creation: 05/07/15 02:46 PM

Question	Answer	Comment
Radioactivity wasn't checked or is </= background as measured by a survey meter.	N/A	
The cooler's custody seal, if present, is intact.	True	
Sample custody seals, if present, are intact.	N/A	
The cooler or samples do not appear to have been compromised or tampered with.	True	
Samples were received on ice.	True	
Cooler Temperature is acceptable.	True	
Cooler Temperature is recorded.	True	5.7°C IR 2
COC is present.	True	
COC is filled out in ink and legible.	True	
COC is filled out with all pertinent information.	True	
Is the Field Sampler's name present on COC?	True	
There are no discrepancies between the containers received and the COC.	True	
Samples are received within Holding Time.	True	
Sample containers have legible labels.	True	
Containers are not broken or leaking.	True	
Sample collection date/times are provided.	True	
Appropriate sample containers are used.	True	
Sample bottles are completely filled.	True	
Sample Preservation Verified.	True	
There is sufficient vol. for all requested analyses, incl. any requested MS/MSDs	True	
Containers requiring zero headspace have no headspace or bubble is <6mm (1/4").	True	
Multiphasic samples are not present.	True	
Samples do not require splitting or compositing.	True	
Residual Chlorine Checked.	N/A	

Login Sample Receipt Checklist

Client: Tetra Tech, Inc.

Job Number: 660-66645-1

Login Number: 66645
List Number: 2
Creator: Banda, Christy S

List Source: TestAmerica Savannah
List Creation: 05/02/15 09:09 AM

Question	Answer	Comment
Radioactivity wasn't checked or is </= background as measured by a survey meter.	N/A	
The cooler's custody seal, if present, is intact.	True	
Sample custody seals, if present, are intact.	True	
The cooler or samples do not appear to have been compromised or tampered with.	True	
Samples were received on ice.	True	
Cooler Temperature is acceptable.	True	
Cooler Temperature is recorded.	True	
COC is present.	True	
COC is filled out in ink and legible.	True	
COC is filled out with all pertinent information.	True	
Is the Field Sampler's name present on COC?	N/A	
There are no discrepancies between the containers received and the COC.	True	
Samples are received within Holding Time.	True	
Sample containers have legible labels.	True	
Containers are not broken or leaking.	True	
Sample collection date/times are provided.	True	
Appropriate sample containers are used.	True	
Sample bottles are completely filled.	True	
Sample Preservation Verified.	N/A	
There is sufficient vol. for all requested analyses, incl. any requested MS/MSDs	True	
Containers requiring zero headspace have no headspace or bubble is <6mm (1/4").	N/A	
Multiphasic samples are not present.	True	
Samples do not require splitting or compositing.	True	
Residual Chlorine Checked.	N/A	

6. Tivoli Wheeling Pump Station Water Analytical Testing Report (During Rain Event) (05/16/2015)

TestAmerica

THE LEADER IN ENVIRONMENTAL TESTING

ANALYTICAL REPORT

TestAmerica Laboratories, Inc.
TestAmerica Tampa
6712 Benjamin Road
Suite 100
Tampa, FL 33634
Tel: (813)885-7427

TestAmerica Job ID: 660-66743-1
Client Project/Site: Lake Monroe

For:
Tetra Tech, Inc.
201 E. Pine St., Ste. 1000
Orlando, Florida 32801

Attn: Rasesh Shah

Authorized for release by:
5/16/2015 10:54:42 AM

Nancy Robertson, Project Manager II
(813)885-7427
nancy.robertson@testamericainc.com

LINKS

Review your project results through TotalAccess

Have a Question? Ask The Expert

Visit us at: www.testamericainc.com

The test results in this report meet all 2003 NELAC and 2009 TNI requirements for accredited parameters, exceptions are noted in this report. This report may not be reproduced except in full, and with written approval from the laboratory. For questions please contact the Project Manager at the e-mail address or telephone number listed on this page.

This report has been electronically signed and authorized by the signatory. Electronic signature is intended to be the legally binding equivalent of a traditionally handwritten signature.

Results relate only to the items tested and the sample(s) as received by the laboratory.

Table of Contents

Cover Page 1
Table of Contents 2
Sample Summary 3
Case Narrative 4
Definitions/Glossary 5
Detection Summary 6
Client Sample Results 7
QC Sample Results 8
QC Association Summary 19
Lab Chronicle 23
Method Summary 24
Certification Summary 25
Subcontract Data 26
Chain of Custody 33
Receipt Checklists 34

Sample Summary

Client: Tetra Tech, Inc.
Project/Site: Lake Monroe

TestAmerica Job ID: 660-66743-1

Lab Sample ID	Client Sample ID	Matrix	Collected	Received
660-66743-1	Wheeling PS stormwater	Water	05/06/15 14:15	05/07/15 09:35

Job ID: 660-66743-1

Laboratory: TestAmerica Tampa

Narrative

Job Narrative
660-66743-1

Comments
No additional comments.

Receipt
The sample was received on 5/7/2015 9:35 AM; the sample arrived in good condition, properly preserved and, where required, on ice. The temperature of the cooler at receipt was 0.7º C.

HPLC/IC
Noanalytical or quality issues were noted, other than those described above or in the Definitions/Glossary page.

Metals
No analytical or quality issues were noted, other than those described in the Definitions/Glossary page.

General Chemistry
Method SM 4500 H+ B: The method requested is normally performed in the field, and performing this method in the laboratory may produce biased results.

No additional analytical or quality issues were noted, other than those described above or in the Definitions/Glossary page.

Subcontract non-Sister
Chlorpphyll-A subcontracted to ENCO labs.

Definitions/Glossary

Client: Tetra Tech, Inc.
Project/Site: Lake Monroe

TestAmerica Job ID: 660-66743-1

Qualifiers

HPLC/IC

Qualifier	Qualifier Description
U	Indicates that the compound was analyzed for but not detected.

Metals

Qualifier	Qualifier Description
U	Indicates that the compound was analyzed for but not detected.
I	The reported value is between the laboratory method detection limit and the laboratory practical quantitation limit.

General Chemistry

Qualifier	Qualifier Description
U	Indicates that the compound was analyzed for but not detected.
J3	Estimated value; value may not be accurate. Spike recovery or RPD outside of criteria.
I	The reported value is between the laboratory method detection limit and the laboratory practical quantitation limit.
Q	Sample held beyond the accepted holding time.

Glossary

Abbreviation	These commonly used abbreviations may or may not be present in this report.
¤	Listed under the "D" column to designate that the result is reported on a dry weight basis
%R	Percent Recovery
CFL	Contains Free Liquid
CNF	Contains no Free Liquid
DER	Duplicate error ratio (normalized absolute difference)
Dil Fac	Dilution Factor
DL, RA, RE, IN	Indicates a Dilution, Re-analysis, Re-extraction, or additional Initial metals/anion analysis of the sample
DLC	Decision level concentration
MDA	Minimum detectable activity
EDL	Estimated Detection Limit
MDC	Minimum detectable concentration
MDL	Method Detection Limit
ML	Minimum Level (Dioxin)
NC	Not Calculated
ND	Not detected at the reporting limit (or MDL or EDL if shown)
PQL	Practical Quantitation Limit
QC	Quality Control
RER	Relative error ratio
RL	Reporting Limit or Requested Limit (Radiochemistry)
RPD	Relative Percent Difference, a measure of the relative difference between two points
TEF	Toxicity Equivalent Factor (Dioxin)
TEQ	Toxicity Equivalent Quotient (Dioxin)

Detection Summary

Client: Tetra Tech, Inc.
Project/Site: Lake Monroe

TestAmerica Job ID: 660-66743-1

Client Sample ID: Wheeling PS stormwater — Lab Sample ID: 660-66743-1

Analyte	Result	Qualifier	PQL	MDL	Unit	Dil Fac	D	Method	Prep Type
Sulfate	17		1.0	0.40	mg/L	1		300.0	Total/NA
Chloride	71		1.0	0.40	mg/L	2		300.0	Total/NA
Iron	0.31		0.20	0.050	mg/L	1		6010B	Total Recoverable
Manganese	0.0031	I	0.0040	0.0010	mg/L	1		6010B	Total Recoverable
Nitrogen, Kjeldahl	0.61		0.20	0.10	mg/L	1		351.2	Total/NA
Nitrate Nitrite as N	1.5		0.050	0.010	mg/L	1		353.2	Total/NA
Phosphorus, Total	0.060	I	0.10	0.041	mg/L	1		365.4	Total/NA
Color	40		5.0	5.0	PCU	1		SM 2120B	Total/NA
pH at time of analysis	7.0		1.0	1.0	SU	1		SM 2120B	Total/NA
Turbidity	1.5		0.50	0.50	NTU	1		SM 2130B	Total/NA
Alkalinity as CaCO3	37		1.0	1.0	mg/L	1		SM 2320B	Total/NA
Total Dissolved Solids	180		5.0	5.0	mg/L	1		SM 2540C	Total/NA
Total Suspended Solids	1.8		1.3	1.3	mg/L	1		SM 2540D	Total/NA
pH	6.90	Q			SU	1		SM 4500 H+ B	Total/NA
Total Organic Carbon	7.7		1.0	0.50	mg/L	1		SM 5310B	Total/NA
Nitrogen, Total	2.1		0.25	0.25	mg/L	1		Total Nitrogen	Total/NA

This Detection Summary does not include radiochemical test results.

Client Sample Results

Client: Tetra Tech, Inc.
Project/Site: Lake Monroe

TestAmerica Job ID: 660-66743-1

Client Sample ID: Wheeling PS stormwater

Lab Sample ID: 660-66743-1

Date Collected: 05/06/15 14:15

Matrix: Water

Date Received: 05/07/15 09:35

Method: 300.0 - Anions, Ion Chromatography

Analyte	Result	Qualifier	PQL	MDL	Unit	D	Prepared	Analyzed	Dil Fac
Sulfate	17		1.0	0.40	mg/L			05/09/15 02:04	1
Chloride	71		1.0	0.40	mg/L			05/12/15 14:40	2

Method: 6010B - Metals (ICP) - Total Recoverable

Analyte	Result	Qualifier	PQL	MDL	Unit	D	Prepared	Analyzed	Dil Fac
Cadmium	0.0010	U	0.0040	0.0010	mg/L		05/07/15 14:30	05/08/15 09:00	1
Iron	0.31		0.20	0.050	mg/L		05/07/15 14:30	05/08/15 09:00	1
Manganese	0.0031	I	0.0040	0.0010	mg/L		05/07/15 14:30	05/08/15 09:00	1
Nickel	0.0020	U	0.0080	0.0020	mg/L		05/07/15 14:30	05/08/15 09:00	1
Zinc	0.0050	U	0.020	0.0050	mg/L		05/07/15 14:30	05/08/15 09:00	1

Method: 7470A - Mercury (CVAA)

Analyte	Result	Qualifier	PQL	MDL	Unit	D	Prepared	Analyzed	Dil Fac
Mercury	0.072	U	0.20	0.072	ug/L		05/12/15 12:10	05/12/15 17:25	1

General Chemistry

Analyte	Result	Qualifier	PQL	MDL	Unit	D	Prepared	Analyzed	Dil Fac
Ammonia as N	0.10	U	0.25	0.10	mg/L			05/08/15 15:56	1
Nitrogen, Kjeldahl	0.61		0.20	0.10	mg/L		05/08/15 09:25	05/11/15 13:00	1
Nitrate Nitrite as N	1.5		0.050	0.010	mg/L			05/12/15 16:28	1
Phosphorus, Total	0.060	I	0.10	0.041	mg/L		05/08/15 09:25	05/11/15 13:00	1
Total Sulfide	1.0	U	1.0	1.0	mg/L			05/11/15 11:46	1
Color	40		5.0	5.0	PCU			05/08/15 05:40	1
pH at time of analysis	7.0		1.0	1.0	SU			05/08/15 05:40	1
Turbidity	1.5		0.50	0.50	NTU			05/08/15 07:46	1
Alkalinity as CaCO3	37		1.0	1.0	mg/L			05/08/15 05:45	1
Total Dissolved Solids	180		5.0	5.0	mg/L			05/08/15 13:56	1
Total Suspended Solids	1.8		1.3	1.3	mg/L			05/07/15 10:50	1
pH	6.90	Q			SU			05/07/15 11:45	1
Total Organic Carbon	7.7		1.0	0.50	mg/L			05/11/15 18:26	1
Nitrogen, Total	2.1		0.25	0.25	mg/L			05/11/15 15:40	1

General Chemistry - Dissolved

Analyte	Result	Qualifier	PQL	MDL	Unit	D	Prepared	Analyzed	Dil Fac
Orthophosphate	0.0050	U	0.010	0.0050	mg/L			05/07/15 10:45	1

Method: 300.0 - Anions, Ion Chromatography

Lab Sample ID: MB 680-382467/33 — **Client Sample ID: Method Blank**
Matrix: Water — **Prep Type: Total/NA**
Analysis Batch: 382467

Analyte	MB Result	MB Qualifier	PQL	MDL	Unit	D	Prepared	Analyzed	Dil Fac
Sulfate	0.40	U	1.0	0.40	mg/L			05/08/15 20:56	1
Chloride	0.20	U	0.50	0.20	mg/L			05/08/15 20:56	1

Lab Sample ID: LCS 680-382467/34 — **Client Sample ID: Lab Control Sample**
Matrix: Water — **Prep Type: Total/NA**
Analysis Batch: 382467

Analyte	Spike Added	LCS Result	LCS Qualifier	Unit	D	%Rec	%Rec. Limits
Sulfate	10.0	10.2		mg/L		102	90 - 110
Chloride	10.0	10.2		mg/L		102	90 - 110

Lab Sample ID: LCSD 680-382467/35 — **Client Sample ID: Lab Control Sample Dup**
Matrix: Water — **Prep Type: Total/NA**
Analysis Batch: 382467

Analyte	Spike Added	LCSD Result	LCSD Qualifier	Unit	D	%Rec	%Rec. Limits	RPD	RPD Limit
Sulfate	10.0	10.3		mg/L		103	90 - 110	0	30
Chloride	10.0	10.1		mg/L		101	90 - 110	1	30

Lab Sample ID: 660-66743-1 MS — **Client Sample ID: Wheeling PS stormwater**
Matrix: Water — **Prep Type: Total/NA**
Analysis Batch: 382467

Analyte	Sample Result	Sample Qualifier	Spike Added	MS Result	MS Qualifier	Unit	D	%Rec	%Rec. Limits
Sulfate	17		10.0	27.7		mg/L		105	80 - 120

Lab Sample ID: 660-66743-1 MSD — **Client Sample ID: Wheeling PS stormwater**
Matrix: Water — **Prep Type: Total/NA**
Analysis Batch: 382467

Analyte	Sample Result	Sample Qualifier	Spike Added	MSD Result	MSD Qualifier	Unit	D	%Rec	%Rec. Limits	RPD	RPD Limit
Sulfate	17		10.0	27.7		mg/L		105	80 - 120	0	30

Lab Sample ID: MB 680-382805/2 — **Client Sample ID: Method Blank**
Matrix: Water — **Prep Type: Total/NA**
Analysis Batch: 382805

Analyte	MB Result	MB Qualifier	PQL	MDL	Unit	D	Prepared	Analyzed	Dil Fac
Chloride	0.20	U	0.50	0.20	mg/L			05/12/15 12:52	1

Lab Sample ID: LCS 680-382805/3 — **Client Sample ID: Lab Control Sample**
Matrix: Water — **Prep Type: Total/NA**
Analysis Batch: 382805

Analyte	Spike Added	LCS Result	LCS Qualifier	Unit	D	%Rec	%Rec. Limits
Chloride	10.0	10.0		mg/L		100	90 - 110

Method: 300.0 - Anions, Ion Chromatography (Continued)

Lab Sample ID: LCSD 680-382805/4 — **Client Sample ID: Lab Control Sample Dup**
Matrix: Water — **Prep Type: Total/NA**
Analysis Batch: 382805

Analyte			Spike Added	LCSD Result	LCSD Qualifier	Unit	D	%Rec	%Rec. Limits	RPD	RPD Limit
Chloride			10.0	10.0		mg/L		100	90 - 110	0	30

Lab Sample ID: 660-66777-A-1 MS — **Client Sample ID: Matrix Spike**
Matrix: Water — **Prep Type: Total/NA**
Analysis Batch: 382805

Analyte	Sample Result	Sample Qualifier	Spike Added	MS Result	MS Qualifier	Unit	D	%Rec	%Rec. Limits		
Chloride	25		10.0	34.7		mg/L		101	80 - 120		

Lab Sample ID: 660-66777-A-1 MSD — **Client Sample ID: Matrix Spike Duplicate**
Matrix: Water — **Prep Type: Total/NA**
Analysis Batch: 382805

Analyte	Sample Result	Sample Qualifier	Spike Added	MSD Result	MSD Qualifier	Unit	D	%Rec	%Rec. Limits	RPD	RPD Limit
Chloride	25		10.0	34.8		mg/L		102	80 - 120	0	30

Lab Sample ID: 680-112222-F-6 DU — **Client Sample ID: Duplicate**
Matrix: Water — **Prep Type: Total/NA**
Analysis Batch: 382805

Analyte	Sample Result	Sample Qualifier		DU Result	DU Qualifier	Unit	D			RPD	RPD Limit
Chloride	4.3			4.32		mg/L				0	30

Method: 6010B - Metals (ICP)

Lab Sample ID: MB 660-157734/1-A — **Client Sample ID: Method Blank**
Matrix: Water — **Prep Type: Total Recoverable**
Analysis Batch: 157752 — **Prep Batch: 157734**

Analyte	MB Result	MB Qualifier	PQL	MDL	Unit	D	Prepared	Analyzed	Dil Fac
Cadmium	0.0010	U	0.0040	0.0010	mg/L		05/07/15 14:30	05/08/15 08:10	1
Iron	0.050	U	0.20	0.050	mg/L		05/07/15 14:30	05/08/15 08:10	1
Manganese	0.0010	U	0.0040	0.0010	mg/L		05/07/15 14:30	05/08/15 08:10	1
Nickel	0.0020	U	0.0080	0.0020	mg/L		05/07/15 14:30	05/08/15 08:10	1
Zinc	0.0050	U	0.020	0.0050	mg/L		05/07/15 14:30	05/08/15 08:10	1

Lab Sample ID: LCS 660-157734/2-A — **Client Sample ID: Lab Control Sample**
Matrix: Water — **Prep Type: Total Recoverable**
Analysis Batch: 157752 — **Prep Batch: 157734**

Analyte			Spike Added	LCS Result	LCS Qualifier	Unit	D	%Rec	%Rec. Limits		
Cadmium			1.00	0.999		mg/L		100	80 - 120		
Iron			1.00	1.02		mg/L		102	80 - 120		
Manganese			1.00	1.03		mg/L		103	80 - 120		
Nickel			1.00	1.03		mg/L		103	80 - 120		
Zinc			1.00	1.05		mg/L		105	80 - 120		

Method: 6010B - Metals (ICP) (Continued)

Lab Sample ID: 640-51110-A-3-B MS — **Client Sample ID: Matrix Spike**
Matrix: Water — **Prep Type: Total Recoverable**
Analysis Batch: 157752 — **Prep Batch: 157734**

Analyte	Sample Result	Sample Qualifier	Spike Added	MS Result	MS Qualifier	Unit	D	%Rec	%Rec. Limits
Cadmium	0.0010	U	1.00	1.02		mg/L		102	80 - 120
Iron	0.050	U	1.00	1.01		mg/L		101	80 - 120
Manganese	0.0013	I	1.00	1.01		mg/L		101	80 - 120
Nickel	0.0020	U	1.00	1.01		mg/L		101	80 - 120
Zinc	0.0077	I	1.00	1.09		mg/L		109	80 - 120

Lab Sample ID: 640-51110-A-3-C MSD — **Client Sample ID: Matrix Spike Duplicate**
Matrix: Water — **Prep Type: Total Recoverable**
Analysis Batch: 157752 — **Prep Batch: 157734**

Analyte	Sample Result	Sample Qualifier	Spike Added	MSD Result	MSD Qualifier	Unit	D	%Rec	%Rec. Limits	RPD	RPD Limit
Cadmium	0.0010	U	1.00	1.02		mg/L		102	80 - 120	1	20
Iron	0.050	U	1.00	1.02		mg/L		102	80 - 120	1	20
Manganese	0.0013	I	1.00	0.999		mg/L		100	80 - 120	1	20
Nickel	0.0020	U	1.00	0.998		mg/L		100	80 - 120	1	20
Zinc	0.0077	I	1.00	1.09		mg/L		108	80 - 120	1	20

Method: 7470A - Mercury (CVAA)

Lab Sample ID: MB 660-157841/13-A — **Client Sample ID: Method Blank**
Matrix: Water — **Prep Type: Total/NA**
Analysis Batch: 157847 — **Prep Batch: 157841**

Analyte	MB Result	MB Qualifier	PQL	MDL	Unit	D	Prepared	Analyzed	Dil Fac
Mercury	0.072	U	0.20	0.072	ug/L		05/12/15 12:10	05/12/15 17:20	1

Lab Sample ID: LCS 660-157841/14-A — **Client Sample ID: Lab Control Sample**
Matrix: Water — **Prep Type: Total/NA**
Analysis Batch: 157847 — **Prep Batch: 157841**

Analyte	Spike Added	LCS Result	LCS Qualifier	Unit	D	%Rec	%Rec. Limits
Mercury	1.40	1.30		ug/L		93	80 - 120

Lab Sample ID: 660-66743-1 MS — **Client Sample ID: Wheeling PS stormwater**
Matrix: Water — **Prep Type: Total/NA**
Analysis Batch: 157847 — **Prep Batch: 157841**

Analyte	Sample Result	Sample Qualifier	Spike Added	MS Result	MS Qualifier	Unit	D	%Rec	%Rec. Limits
Mercury	0.072	U	1.40	1.35		ug/L		96	80 - 120

Lab Sample ID: 660-66743-1 MSD — **Client Sample ID: Wheeling PS stormwater**
Matrix: Water — **Prep Type: Total/NA**
Analysis Batch: 157847 — **Prep Batch: 157841**

Analyte	Sample Result	Sample Qualifier	Spike Added	MSD Result	MSD Qualifier	Unit	D	%Rec	%Rec. Limits	RPD	RPD Limit
Mercury	0.072	U	1.40	1.37		ug/L		98	80 - 120	2	20

QC Sample Results

Client: Tetra Tech, Inc.
Project/Site: Lake Monroe

TestAmerica Job ID: 660-66743-1

Method: 350.1 - Nitrogen, Ammonia

Lab Sample ID: MB 680-382435/19 — **Client Sample ID: Method Blank**
Matrix: Water — **Prep Type: Total/NA**
Analysis Batch: 382435

Analyte	MB Result	MB Qualifier	PQL	MDL	Unit	D	Prepared	Analyzed	Dil Fac
Ammonia as N	0.10	U	0.25	0.10	mg/L			05/08/15 16:05	1

Lab Sample ID: LCS 680-382435/33 — **Client Sample ID: Lab Control Sample**
Matrix: Water — **Prep Type: Total/NA**
Analysis Batch: 382435

Analyte	Spike Added	LCS Result	LCS Qualifier	Unit	D	%Rec	%Rec. Limits
Ammonia as N	1.00	0.989		mg/L		99	90 - 110

Lab Sample ID: 660-66728-J-5 MS — **Client Sample ID: Matrix Spike**
Matrix: Water — **Prep Type: Total/NA**
Analysis Batch: 382435

Analyte	Sample Result	Sample Qualifier	Spike Added	MS Result	MS Qualifier	Unit	D	%Rec	%Rec. Limits
Ammonia as N	0.10	U	1.00	1.03		mg/L		103	90 - 110

Lab Sample ID: 660-66728-J-5 MSD — **Client Sample ID: Matrix Spike Duplicate**
Matrix: Water — **Prep Type: Total/NA**
Analysis Batch: 382435

Analyte	Sample Result	Sample Qualifier	Spike Added	MSD Result	MSD Qualifier	Unit	D	%Rec	%Rec. Limits	RPD	RPD Limit
Ammonia as N	0.10	U	1.00	1.03		mg/L		103	90 - 110	0	30

Lab Sample ID: 680-112278-E-1 DU — **Client Sample ID: Duplicate**
Matrix: Water — **Prep Type: Total/NA**
Analysis Batch: 382435

Analyte	Sample Result	Sample Qualifier	DU Result	DU Qualifier	Unit	D	RPD	RPD Limit
Ammonia as N	0.34		0.338		mg/L		0.3	30

Method: 351.2 - Nitrogen, Total Kjeldahl

Lab Sample ID: MB 680-382138/1-A — **Client Sample ID: Method Blank**
Matrix: Water — **Prep Type: Total/NA**
Analysis Batch: 382537 — **Prep Batch: 382138**

Analyte	MB Result	MB Qualifier	PQL	MDL	Unit	D	Prepared	Analyzed	Dil Fac
Nitrogen, Kjeldahl	0.10	U	0.20	0.10	mg/L		05/08/15 09:25	05/11/15 12:35	1

Lab Sample ID: LCS 680-382138/2-A — **Client Sample ID: Lab Control Sample**
Matrix: Water — **Prep Type: Total/NA**
Analysis Batch: 382537 — **Prep Batch: 382138**

Analyte	Spike Added	LCS Result	LCS Qualifier	Unit	D	%Rec	%Rec. Limits
Nitrogen, Kjeldahl	2.00	2.20		mg/L		110	75 - 125

Method: 351.2 - Nitrogen, Total Kjeldahl (Continued)

Lab Sample ID: 660-66741-G-1-B MS — **Client Sample ID: Matrix Spike**
Matrix: Water — **Prep Type: Total/NA**
Analysis Batch: 382537 — **Prep Batch: 382138**

Analyte	Sample Result	Sample Qualifier	Spike Added	MS Result	MS Qualifier	Unit	D	%Rec	%Rec. Limits		
Nitrogen, Kjeldahl	0.21		2.00	2.47		mg/L		113	75 - 125		

Lab Sample ID: 660-66741-G-1-C MSD — **Client Sample ID: Matrix Spike Duplicate**
Matrix: Water — **Prep Type: Total/NA**
Analysis Batch: 382537 — **Prep Batch: 382138**

Analyte	Sample Result	Sample Qualifier	Spike Added	MSD Result	MSD Qualifier	Unit	D	%Rec	%Rec. Limits	RPD	RPD Limit
Nitrogen, Kjeldahl	0.21		2.00	2.35		mg/L		107	75 - 125	5	40

Lab Sample ID: 660-66741-G-1-D DU — **Client Sample ID: Duplicate**
Matrix: Water — **Prep Type: Total/NA**
Analysis Batch: 382537 — **Prep Batch: 382138**

Analyte	Sample Result	Sample Qualifier		DU Result	DU Qualifier	Unit	D			RPD	RPD Limit
Nitrogen, Kjeldahl	0.21			0.177	I	mg/L				17	40

Method: 353.2 - Nitrogen, Nitrate-Nitrite

Lab Sample ID: MB 680-382751/13 — **Client Sample ID: Method Blank**
Matrix: Water — **Prep Type: Total/NA**
Analysis Batch: 382751

Analyte	MB Result	MB Qualifier	PQL	MDL	Unit	D	Prepared	Analyzed	Dil Fac
Nitrate Nitrite as N	0.010	U	0.050	0.010	mg/L			05/12/15 15:44	1

Lab Sample ID: LCS 680-382751/15 — **Client Sample ID: Lab Control Sample**
Matrix: Water — **Prep Type: Total/NA**
Analysis Batch: 382751

Analyte			Spike Added	LCS Result	LCS Qualifier	Unit	D	%Rec	%Rec. Limits		
Nitrate Nitrite as N			1.00	1.05		mg/L		105	90 - 110		

Lab Sample ID: 280-68710-A-1 MS — **Client Sample ID: Matrix Spike**
Matrix: Water — **Prep Type: Total/NA**
Analysis Batch: 382751

Analyte	Sample Result	Sample Qualifier	Spike Added	MS Result	MS Qualifier	Unit	D	%Rec	%Rec. Limits		
Nitrate Nitrite as N	0.010	U	1.00	1.04		mg/L		104	90 - 110		

Lab Sample ID: 280-68710-A-1 MSD — **Client Sample ID: Matrix Spike Duplicate**
Matrix: Water — **Prep Type: Total/NA**
Analysis Batch: 382751

Analyte	Sample Result	Sample Qualifier	Spike Added	MSD Result	MSD Qualifier	Unit	D	%Rec	%Rec. Limits	RPD	RPD Limit
Nitrate Nitrite as N	0.010	U	1.00	1.03		mg/L		103	90 - 110	1	10

Method: 353.2 - Nitrogen, Nitrate-Nitrite (Continued)

Lab Sample ID: 440-108984-J-1 DU — **Client Sample ID: Duplicate**
Matrix: Water — **Prep Type: Total/NA**
Analysis Batch: 382751

Analyte	Sample Result	Sample Qualifier		DU Result	DU Qualifier	Unit	D			RPD	RPD Limit
Nitrate Nitrite as N	0.23			0.232		mg/L				1	10

Method: 365.4 - Phosphorus, Total

Lab Sample ID: MB 680-382138/1-A — **Client Sample ID: Method Blank**
Matrix: Water — **Prep Type: Total/NA**
Analysis Batch: 382536 — **Prep Batch: 382138**

Analyte	MB Result	MB Qualifier	PQL	MDL	Unit	D	Prepared	Analyzed	Dil Fac
Phosphorus, Total	0.041	U	0.10	0.041	mg/L		05/08/15 09:25	05/11/15 12:35	1

Lab Sample ID: LCS 680-382138/2-A — **Client Sample ID: Lab Control Sample**
Matrix: Water — **Prep Type: Total/NA**
Analysis Batch: 382536 — **Prep Batch: 382138**

Analyte			Spike Added	LCS Result	LCS Qualifier	Unit	D	%Rec	%Rec. Limits		
Phosphorus, Total			2.00	2.03		mg/L		102	60 - 140		

Lab Sample ID: 660-66741-G-1-B MS — **Client Sample ID: Matrix Spike**
Matrix: Water — **Prep Type: Total/NA**
Analysis Batch: 382536 — **Prep Batch: 382138**

Analyte	Sample Result	Sample Qualifier	Spike Added	MS Result	MS Qualifier	Unit	D	%Rec	%Rec. Limits		
Phosphorus, Total	0.041	U	2.00	2.04		mg/L		102	60 - 140		

Lab Sample ID: 660-66741-G-1-C MSD — **Client Sample ID: Matrix Spike Duplicate**
Matrix: Water — **Prep Type: Total/NA**
Analysis Batch: 382536 — **Prep Batch: 382138**

Analyte	Sample Result	Sample Qualifier	Spike Added	MSD Result	MSD Qualifier	Unit	D	%Rec	%Rec. Limits	RPD	RPD Limit
Phosphorus, Total	0.041	U	2.00	1.98		mg/L		99	60 - 140	3	40

Lab Sample ID: 660-66741-G-1-D DU — **Client Sample ID: Duplicate**
Matrix: Water — **Prep Type: Total/NA**
Analysis Batch: 382536 — **Prep Batch: 382138**

Analyte	Sample Result	Sample Qualifier		DU Result	DU Qualifier	Unit	D			RPD	RPD Limit
Phosphorus, Total	0.041	U		0.0669	I	mg/L				NC	40

Method: 4500 S2 F-2011 - Sulfide, Total

Lab Sample ID: MB 680-382508/1 — **Client Sample ID: Method Blank**
Matrix: Water — **Prep Type: Total/NA**
Analysis Batch: 382508

Analyte	MB Result	MB Qualifier	PQL	MDL	Unit	D	Prepared	Analyzed	Dil Fac
Total Sulfide	1.0	U	1.0	1.0	mg/L			05/11/15 11:46	1

Method: 4500 S2 F-2011 - Sulfide, Total (Continued)

Lab Sample ID: LCS 680-382508/2 — **Client Sample ID: Lab Control Sample**
Matrix: Water — **Prep Type: Total/NA**
Analysis Batch: 382508

Analyte			Spike Added	LCS Result	LCS Qualifier	Unit	D	%Rec	%Rec. Limits		
Total Sulfide			10.0	10.2		mg/L		102	75 - 125		

Lab Sample ID: LCSD 680-382508/3 — **Client Sample ID: Lab Control Sample Dup**
Matrix: Water — **Prep Type: Total/NA**
Analysis Batch: 382508

Analyte			Spike Added	LCSD Result	LCSD Qualifier	Unit	D	%Rec	%Rec. Limits	RPD	RPD Limit
Total Sulfide			10.0	10.5		mg/L		105	75 - 125	3	30

Lab Sample ID: 680-112295-D-6 MS — **Client Sample ID: Matrix Spike**
Matrix: Water — **Prep Type: Total/NA**
Analysis Batch: 382508

Analyte	Sample Result	Sample Qualifier	Spike Added	MS Result	MS Qualifier	Unit	D	%Rec	%Rec. Limits		
Total Sulfide	1.0	U	10.0	11.3		mg/L		113	75 - 125		

Lab Sample ID: 680-112295-D-6 MSD — **Client Sample ID: Matrix Spike Duplicate**
Matrix: Water — **Prep Type: Total/NA**
Analysis Batch: 382508

Analyte	Sample Result	Sample Qualifier	Spike Added	MSD Result	MSD Qualifier	Unit	D	%Rec	%Rec. Limits	RPD	RPD Limit
Total Sulfide	1.0	U	10.0	9.89		mg/L		99	75 - 125	13	30

Lab Sample ID: 680-112295-E-2 DU — **Client Sample ID: Duplicate**
Matrix: Water — **Prep Type: Total/NA**
Analysis Batch: 382508

Analyte	Sample Result	Sample Qualifier		DU Result	DU Qualifier	Unit	D			RPD	RPD Limit
Total Sulfide	1.0	U		1.0	U	mg/L				NC	30

Method: SM 2120B - Color, Colorimetric

Lab Sample ID: MB 660-157746/4 — **Client Sample ID: Method Blank**
Matrix: Water — **Prep Type: Total/NA**
Analysis Batch: 157746

Analyte	MB Result	MB Qualifier	PQL	MDL	Unit	D	Prepared	Analyzed	Dil Fac
Color	5.0	U	5.0	5.0	PCU			05/08/15 05:40	1
pH at time of analysis	6.51		1.0	1.0	SU			05/08/15 05:40	1

Lab Sample ID: LCS 660-157746/5 — **Client Sample ID: Lab Control Sample**
Matrix: Water — **Prep Type: Total/NA**
Analysis Batch: 157746

Analyte			Spike Added	LCS Result	LCS Qualifier	Unit	D	%Rec	%Rec. Limits		
Color			30.0	30.0		PCU		100	90 - 110		

Method: SM 2120B - Color, Colorimetric (Continued)

Lab Sample ID: 660-66727-D-1 DU — **Client Sample ID: Duplicate**
Matrix: Water — **Prep Type: Total/NA**
Analysis Batch: 157746

Analyte	Sample Result	Sample Qualifier		DU Result	DU Qualifier	Unit	D			RPD	RPD Limit
Color	25			25.0		PCU				0	20
pH at time of analysis	7.3			7.33		SU				0.1	

Method: SM 2130B - Turbidity

Lab Sample ID: MB 660-157748/2 — **Client Sample ID: Method Blank**
Matrix: Water — **Prep Type: Total/NA**
Analysis Batch: 157748

Analyte	MB Result	MB Qualifier	PQL	MDL	Unit	D	Prepared	Analyzed	Dil Fac
Turbidity	0.50	U	0.50	0.50	NTU			05/08/15 07:46	1

Lab Sample ID: LCS 660-157748/3 — **Client Sample ID: Lab Control Sample**
Matrix: Water — **Prep Type: Total/NA**
Analysis Batch: 157748

Analyte			Spike Added	LCS Result	LCS Qualifier	Unit	D	%Rec	%Rec. Limits		
Turbidity			40.0	40.1		NTU		100	90 - 110		

Lab Sample ID: LCSD 660-157748/6 — **Client Sample ID: Lab Control Sample Dup**
Matrix: Water — **Prep Type: Total/NA**
Analysis Batch: 157748

Analyte			Spike Added	LCSD Result	LCSD Qualifier	Unit	D	%Rec	%Rec. Limits	RPD	RPD Limit
Turbidity			40.0	39.9		NTU		100	90 - 110	1	20

Lab Sample ID: 660-66713-C-1 DU — **Client Sample ID: Duplicate**
Matrix: Water — **Prep Type: Total/NA**
Analysis Batch: 157748

Analyte	Sample Result	Sample Qualifier		DU Result	DU Qualifier	Unit	D			RPD	RPD Limit
Turbidity	3.3			3.20		NTU				3	20

Method: SM 2320B - Alkalinity

Lab Sample ID: MB 660-157750/1 — **Client Sample ID: Method Blank**
Matrix: Water — **Prep Type: Total/NA**
Analysis Batch: 157750

Analyte	MB Result	MB Qualifier	PQL	MDL	Unit	D	Prepared	Analyzed	Dil Fac
Alkalinity as CaCO3	1.0	U	1.0	1.0	mg/L			05/08/15 05:45	1

Lab Sample ID: LCS 660-157750/3 — **Client Sample ID: Lab Control Sample**
Matrix: Water — **Prep Type: Total/NA**
Analysis Batch: 157750

Analyte			Spike Added	LCS Result	LCS Qualifier	Unit	D	%Rec	%Rec. Limits		
Alkalinity as CaCO3			118	123		mg/L		104	90 - 110		

Method: SM 2320B - Alkalinity (Continued)

Lab Sample ID: 660-66713-C-1 DU — **Client Sample ID: Duplicate**
Matrix: Water — **Prep Type: Total/NA**
Analysis Batch: 157750

Analyte	Sample Result	Sample Qualifier		DU Result	DU Qualifier	Unit	D			RPD	RPD Limit
Alkalinity as CaCO3	1.0	U		1.0	U	mg/L				NC	30

Method: SM 2540C - Solids, Total Dissolved (TDS)

Lab Sample ID: MB 660-157772/1 — **Client Sample ID: Method Blank**
Matrix: Water — **Prep Type: Total/NA**
Analysis Batch: 157772

Analyte	MB Result	MB Qualifier	PQL	MDL	Unit	D	Prepared	Analyzed	Dil Fac
Total Dissolved Solids	5.0	U	5.0	5.0	mg/L			05/08/15 13:56	1

Lab Sample ID: LCS 660-157772/2 — **Client Sample ID: Lab Control Sample**
Matrix: Water — **Prep Type: Total/NA**
Analysis Batch: 157772

Analyte			Spike Added	LCS Result	LCS Qualifier	Unit	D	%Rec	%Rec. Limits		
Total Dissolved Solids			10000	9300		mg/L		93	80 - 120		

Lab Sample ID: 660-66728-G-1 DU — **Client Sample ID: Duplicate**
Matrix: Water — **Prep Type: Total/NA**
Analysis Batch: 157772

Analyte	Sample Result	Sample Qualifier		DU Result	DU Qualifier	Unit	D			RPD	RPD Limit
Total Dissolved Solids	12			14.0		mg/L				15	20

Method: SM 2540D - Solids, Total Suspended (TSS)

Lab Sample ID: MB 660-157729/1 — **Client Sample ID: Method Blank**
Matrix: Water — **Prep Type: Total/NA**
Analysis Batch: 157729

Analyte	MB Result	MB Qualifier	PQL	MDL	Unit	D	Prepared	Analyzed	Dil Fac
Total Suspended Solids	5.0	U	5.0	5.0	mg/L			05/07/15 10:50	1

Lab Sample ID: LCS 660-157729/2 — **Client Sample ID: Lab Control Sample**
Matrix: Water — **Prep Type: Total/NA**
Analysis Batch: 157729

Analyte			Spike Added	LCS Result	LCS Qualifier	Unit	D	%Rec	%Rec. Limits		
Total Suspended Solids			100	99.2		mg/L		99	80 - 120		

Lab Sample ID: 660-66720-B-2 DU — **Client Sample ID: Duplicate**
Matrix: Water — **Prep Type: Total/NA**
Analysis Batch: 157729

Analyte	Sample Result	Sample Qualifier		DU Result	DU Qualifier	Unit	D			RPD	RPD Limit
Total Suspended Solids	55			69.4	J3	mg/L				23	20

QC Sample Results

Client: Tetra Tech, Inc.
Project/Site: Lake Monroe

TestAmerica Job ID: 660-66743-1

Method: SM 4500 H+ B - pH

Lab Sample ID: LCS 660-157730/1 — **Client Sample ID: Lab Control Sample**
Matrix: Water — **Prep Type: Total/NA**
Analysis Batch: 157730

Analyte			Spike Added	LCS Result	LCS Qualifier	Unit	D	%Rec	%Rec. Limits		
pH			6.00	6.010		SU		100	98 - 102		

Lab Sample ID: 660-66713-C-1 DU — **Client Sample ID: Duplicate**
Matrix: Water — **Prep Type: Total/NA**
Analysis Batch: 157730

Analyte	Sample Result	Sample Qualifier		DU Result	DU Qualifier	Unit	D			RPD	RPD Limit
pH	1.97			1.990		SU				1	20

Method: SM 4500 P E - Orthophosphate

Lab Sample ID: MB 660-157735/4 — **Client Sample ID: Method Blank**
Matrix: Water — **Prep Type: Total/NA**
Analysis Batch: 157735

Analyte	MB Result	MB Qualifier	PQL	MDL	Unit	D	Prepared	Analyzed	Dil Fac
Orthophosphate	0.0050	U	0.010	0.0050	mg/L			05/07/15 08:50	1

Lab Sample ID: LCS 660-157735/5 — **Client Sample ID: Lab Control Sample**
Matrix: Water — **Prep Type: Total/NA**
Analysis Batch: 157735

Analyte			Spike Added	LCS Result	LCS Qualifier	Unit	D	%Rec	%Rec. Limits		
Orthophosphate			0.300	0.327		mg/L		109	90 - 110		

Lab Sample ID: 660-66728-H-1 MS — **Client Sample ID: Matrix Spike**
Matrix: Water — **Prep Type: Dissolved**
Analysis Batch: 157735

Analyte	Sample Result	Sample Qualifier	Spike Added	MS Result	MS Qualifier	Unit	D	%Rec	%Rec. Limits		
Orthophosphate	0.016		0.300	0.327		mg/L		104	90 - 110		

Lab Sample ID: 660-66728-H-1 MSD — **Client Sample ID: Matrix Spike Duplicate**
Matrix: Water — **Prep Type: Dissolved**
Analysis Batch: 157735

Analyte	Sample Result	Sample Qualifier	Spike Added	MSD Result	MSD Qualifier	Unit	D	%Rec	%Rec. Limits	RPD	RPD Limit
Orthophosphate	0.016		0.300	0.330		mg/L		105	90 - 110	1	30

Method: SM 5310B - Organic Carbon, Total (TOC)

Lab Sample ID: MB 400-256821/4 — **Client Sample ID: Method Blank**
Matrix: Water — **Prep Type: Total/NA**
Analysis Batch: 256821

Analyte	MB Result	MB Qualifier	PQL	MDL	Unit	D	Prepared	Analyzed	Dil Fac
Total Organic Carbon	0.50	U	1.0	0.50	mg/L			05/11/15 18:00	1

Method: SM 5310B - Organic Carbon, Total (TOC) (Continued)

Lab Sample ID: LCS 400-256821/5 — **Client Sample ID: Lab Control Sample**
Matrix: Water — **Prep Type: Total/NA**
Analysis Batch: 256821

Analyte	Spike Added	LCS Result	LCS Qualifier	Unit	D	%Rec	%Rec. Limits
Total Organic Carbon	10.0	11.1		mg/L		111	80 - 120

Lab Sample ID: MRL 400-256821/2 — **Client Sample ID: Lab Control Sample**
Matrix: Water — **Prep Type: Total/NA**
Analysis Batch: 256821

Analyte	Spike Added	MRL Result	MRL Qualifier	Unit	D	%Rec	%Rec. Limits
Total Organic Carbon	1.00	1.41		mg/L		141	50 - 150

Lab Sample ID: 660-66743-1 MS — **Client Sample ID: Wheeling PS stormwater**
Matrix: Water — **Prep Type: Total/NA**
Analysis Batch: 256821

Analyte	Sample Result	Sample Qualifier	Spike Added	MS Result	MS Qualifier	Unit	D	%Rec	%Rec. Limits
Total Organic Carbon	7.7		5.00	13.1		mg/L		107	76 - 117

Lab Sample ID: 660-66743-1 MSD — **Client Sample ID: Wheeling PS stormwater**
Matrix: Water — **Prep Type: Total/NA**
Analysis Batch: 256821

Analyte	Sample Result	Sample Qualifier	Spike Added	MSD Result	MSD Qualifier	Unit	D	%Rec	%Rec. Limits	RPD	RPD Limit
Total Organic Carbon	7.7		5.00	13.3		mg/L		112	76 - 117	2	16

Lab Sample ID: 400-105347-B-8 DU — **Client Sample ID: Duplicate**
Matrix: Water — **Prep Type: Total/NA**
Analysis Batch: 256821

Analyte	Sample Result	Sample Qualifier	DU Result	DU Qualifier	Unit	D	RPD	RPD Limit
Total Organic Carbon	7.4		7.24		mg/L		2	16

QC Association Summary

Client: Tetra Tech, Inc.
Project/Site: Lake Monroe

TestAmerica Job ID: 660-66743-1

HPLC/IC

Analysis Batch: 382467

Lab Sample ID	Client Sample ID	Prep Type	Matrix	Method	Prep Batch
660-66743-1	Wheeling PS stormwater	Total/NA	Water	300.0	
660-66743-1 MS	Wheeling PS stormwater	Total/NA	Water	300.0	
660-66743-1 MSD	Wheeling PS stormwater	Total/NA	Water	300.0	
LCS 680-382467/34	Lab Control Sample	Total/NA	Water	300.0	
LCSD 680-382467/35	Lab Control Sample Dup	Total/NA	Water	300.0	
MB 680-382467/33	Method Blank	Total/NA	Water	300.0	

Analysis Batch: 382805

Lab Sample ID	Client Sample ID	Prep Type	Matrix	Method	Prep Batch
660-66743-1	Wheeling PS stormwater	Total/NA	Water	300.0	
660-66777-A-1 MS	Matrix Spike	Total/NA	Water	300.0	
660-66777-A-1 MSD	Matrix Spike Duplicate	Total/NA	Water	300.0	
680-112222-F-6 DU	Duplicate	Total/NA	Water	300.0	
LCS 680-382805/3	Lab Control Sample	Total/NA	Water	300.0	
LCSD 680-382805/4	Lab Control Sample Dup	Total/NA	Water	300.0	
MB 680-382805/2	Method Blank	Total/NA	Water	300.0	

Metals

Prep Batch: 157734

Lab Sample ID	Client Sample ID	Prep Type	Matrix	Method	Prep Batch
640-51110-A-3-B MS	Matrix Spike	Total Recoverable	Water	3005A	
640-51110-A-3-C MSD	Matrix Spike Duplicate	Total Recoverable	Water	3005A	
660-66743-1	Wheeling PS stormwater	Total Recoverable	Water	3005A	
LCS 660-157734/2-A	Lab Control Sample	Total Recoverable	Water	3005A	
MB 660-157734/1-A	Method Blank	Total Recoverable	Water	3005A	

Analysis Batch: 157752

Lab Sample ID	Client Sample ID	Prep Type	Matrix	Method	Prep Batch
640-51110-A-3-B MS	Matrix Spike	Total Recoverable	Water	6010B	157734
640-51110-A-3-C MSD	Matrix Spike Duplicate	Total Recoverable	Water	6010B	157734
660-66743-1	Wheeling PS stormwater	Total Recoverable	Water	6010B	157734
LCS 660-157734/2-A	Lab Control Sample	Total Recoverable	Water	6010B	157734
MB 660-157734/1-A	Method Blank	Total Recoverable	Water	6010B	157734

Prep Batch: 157841

Lab Sample ID	Client Sample ID	Prep Type	Matrix	Method	Prep Batch
660-66743-1	Wheeling PS stormwater	Total/NA	Water	7470A	
660-66743-1 MS	Wheeling PS stormwater	Total/NA	Water	7470A	
660-66743-1 MSD	Wheeling PS stormwater	Total/NA	Water	7470A	
LCS 660-157841/14-A	Lab Control Sample	Total/NA	Water	7470A	
MB 660-157841/13-A	Method Blank	Total/NA	Water	7470A	

Analysis Batch: 157847

Lab Sample ID	Client Sample ID	Prep Type	Matrix	Method	Prep Batch
660-66743-1	Wheeling PS stormwater	Total/NA	Water	7470A	157841
660-66743-1 MS	Wheeling PS stormwater	Total/NA	Water	7470A	157841
660-66743-1 MSD	Wheeling PS stormwater	Total/NA	Water	7470A	157841
LCS 660-157841/14-A	Lab Control Sample	Total/NA	Water	7470A	157841
MB 660-157841/13-A	Method Blank	Total/NA	Water	7470A	157841

QC Association Summary

Client: Tetra Tech, Inc.
Project/Site: Lake Monroe

TestAmerica Job ID: 660-66743-1

General Chemistry

Analysis Batch: 157729

Lab Sample ID	Client Sample ID	Prep Type	Matrix	Method	Prep Batch
660-66720-B-2 DU	Duplicate	Total/NA	Water	SM 2540D	
660-66743-1	Wheeling PS stormwater	Total/NA	Water	SM 2540D	
LCS 660-157729/2	Lab Control Sample	Total/NA	Water	SM 2540D	
MB 660-157729/1	Method Blank	Total/NA	Water	SM 2540D	

Analysis Batch: 157730

Lab Sample ID	Client Sample ID	Prep Type	Matrix	Method	Prep Batch
660-66713-C-1 DU	Duplicate	Total/NA	Water	SM 4500 H+ B	
660-66743-1	Wheeling PS stormwater	Total/NA	Water	SM 4500 H+ B	
LCS 660-157730/1	Lab Control Sample	Total/NA	Water	SM 4500 H+ B	

Analysis Batch: 157735

Lab Sample ID	Client Sample ID	Prep Type	Matrix	Method	Prep Batch
660-66728-H-1 MS	Matrix Spike	Dissolved	Water	SM 4500 P E	
660-66728-H-1 MSD	Matrix Spike Duplicate	Dissolved	Water	SM 4500 P E	
660-66743-1	Wheeling PS stormwater	Dissolved	Water	SM 4500 P E	
LCS 660-157735/5	Lab Control Sample	Total/NA	Water	SM 4500 P E	
MB 660-157735/4	Method Blank	Total/NA	Water	SM 4500 P E	

Analysis Batch: 157746

Lab Sample ID	Client Sample ID	Prep Type	Matrix	Method	Prep Batch
660-66727-D-1 DU	Duplicate	Total/NA	Water	SM 2120B	
660-66743-1	Wheeling PS stormwater	Total/NA	Water	SM 2120B	
LCS 660-157746/5	Lab Control Sample	Total/NA	Water	SM 2120B	
MB 660-157746/4	Method Blank	Total/NA	Water	SM 2120B	

Analysis Batch: 157748

Lab Sample ID	Client Sample ID	Prep Type	Matrix	Method	Prep Batch
660-66713-C-1 DU	Duplicate	Total/NA	Water	SM 2130B	
660-66743-1	Wheeling PS stormwater	Total/NA	Water	SM 2130B	
LCS 660-157748/3	Lab Control Sample	Total/NA	Water	SM 2130B	
LCSD 660-157748/6	Lab Control Sample Dup	Total/NA	Water	SM 2130B	
MB 660-157748/2	Method Blank	Total/NA	Water	SM 2130B	

Analysis Batch: 157750

Lab Sample ID	Client Sample ID	Prep Type	Matrix	Method	Prep Batch
660-66713-C-1 DU	Duplicate	Total/NA	Water	SM 2320B	
660-66743-1	Wheeling PS stormwater	Total/NA	Water	SM 2320B	
LCS 660-157750/3	Lab Control Sample	Total/NA	Water	SM 2320B	
MB 660-157750/1	Method Blank	Total/NA	Water	SM 2320B	

Analysis Batch: 157772

Lab Sample ID	Client Sample ID	Prep Type	Matrix	Method	Prep Batch
660-66728-G-1 DU	Duplicate	Total/NA	Water	SM 2540C	
660-66743-1	Wheeling PS stormwater	Total/NA	Water	SM 2540C	
LCS 660-157772/2	Lab Control Sample	Total/NA	Water	SM 2540C	
MB 660-157772/1	Method Blank	Total/NA	Water	SM 2540C	

Analysis Batch: 256821

Lab Sample ID	Client Sample ID	Prep Type	Matrix	Method	Prep Batch
400-105347-B-8 DU	Duplicate	Total/NA	Water	SM 5310B	

General Chemistry (Continued)

Analysis Batch: 256821 (Continued)

Lab Sample ID	Client Sample ID	Prep Type	Matrix	Method	Prep Batch
660-66743-1	Wheeling PS stormwater	Total/NA	Water	SM 5310B	
660-66743-1 MS	Wheeling PS stormwater	Total/NA	Water	SM 5310B	
660-66743-1 MSD	Wheeling PS stormwater	Total/NA	Water	SM 5310B	
LCS 400-256821/5	Lab Control Sample	Total/NA	Water	SM 5310B	
MB 400-256821/4	Method Blank	Total/NA	Water	SM 5310B	
MRL 400-256821/2	Lab Control Sample	Total/NA	Water	SM 5310B	

Prep Batch: 382138

Lab Sample ID	Client Sample ID	Prep Type	Matrix	Method	Prep Batch
660-66741-G-1-B MS	Matrix Spike	Total/NA	Water	Digestion	
660-66741-G-1-C MSD	Matrix Spike Duplicate	Total/NA	Water	Digestion	
660-66741-G-1-D DU	Duplicate	Total/NA	Water	Digestion	
660-66743-1	Wheeling PS stormwater	Total/NA	Water	Digestion	
LCS 680-382138/2-A	Lab Control Sample	Total/NA	Water	Digestion	
MB 680-382138/1-A	Method Blank	Total/NA	Water	Digestion	

Analysis Batch: 382435

Lab Sample ID	Client Sample ID	Prep Type	Matrix	Method	Prep Batch
660-66728-J-5 MS	Matrix Spike	Total/NA	Water	350.1	
660-66728-J-5 MSD	Matrix Spike Duplicate	Total/NA	Water	350.1	
660-66743-1	Wheeling PS stormwater	Total/NA	Water	350.1	
680-112278-E-1 DU	Duplicate	Total/NA	Water	350.1	
LCS 680-382435/33	Lab Control Sample	Total/NA	Water	350.1	
MB 680-382435/19	Method Blank	Total/NA	Water	350.1	

Analysis Batch: 382508

Lab Sample ID	Client Sample ID	Prep Type	Matrix	Method	Prep Batch
660-66743-1	Wheeling PS stormwater	Total/NA	Water	4500 S2 F-2011	
680-112295-D-6 MS	Matrix Spike	Total/NA	Water	4500 S2 F-2011	
680-112295-D-6 MSD	Matrix Spike Duplicate	Total/NA	Water	4500 S2 F-2011	
680-112295-E-2 DU	Duplicate	Total/NA	Water	4500 S2 F-2011	
LCS 680-382508/2	Lab Control Sample	Total/NA	Water	4500 S2 F-2011	
LCSD 680-382508/3	Lab Control Sample Dup	Total/NA	Water	4500 S2 F-2011	
MB 680-382508/1	Method Blank	Total/NA	Water	4500 S2 F-2011	

Analysis Batch: 382536

Lab Sample ID	Client Sample ID	Prep Type	Matrix	Method	Prep Batch
660-66741-G-1-B MS	Matrix Spike	Total/NA	Water	365.4	382138
660-66741-G-1-C MSD	Matrix Spike Duplicate	Total/NA	Water	365.4	382138
660-66741-G-1-D DU	Duplicate	Total/NA	Water	365.4	382138
660-66743-1	Wheeling PS stormwater	Total/NA	Water	365.4	382138
LCS 680-382138/2-A	Lab Control Sample	Total/NA	Water	365.4	382138
MB 680-382138/1-A	Method Blank	Total/NA	Water	365.4	382138

Analysis Batch: 382537

Lab Sample ID	Client Sample ID	Prep Type	Matrix	Method	Prep Batch
660-66741-G-1-B MS	Matrix Spike	Total/NA	Water	351.2	382138
660-66741-G-1-C MSD	Matrix Spike Duplicate	Total/NA	Water	351.2	382138
660-66741-G-1-D DU	Duplicate	Total/NA	Water	351.2	382138
660-66743-1	Wheeling PS stormwater	Total/NA	Water	351.2	382138
LCS 680-382138/2-A	Lab Control Sample	Total/NA	Water	351.2	382138

General Chemistry (Continued)

Analysis Batch: 382537 (Continued)

Lab Sample ID	Client Sample ID	Prep Type	Matrix	Method	Prep Batch
MB 680-382138/1-A	Method Blank	Total/NA	Water	351.2	382138

Analysis Batch: 382555

Lab Sample ID	Client Sample ID	Prep Type	Matrix	Method	Prep Batch
660-66743-1	Wheeling PS stormwater	Total/NA	Water	Total Nitrogen	

Analysis Batch: 382751

Lab Sample ID	Client Sample ID	Prep Type	Matrix	Method	Prep Batch
280-68710-A-1 MS	Matrix Spike	Total/NA	Water	353.2	
280-68710-A-1 MSD	Matrix Spike Duplicate	Total/NA	Water	353.2	
440-108984-J-1 DU	Duplicate	Total/NA	Water	353.2	
660-66743-1	Wheeling PS stormwater	Total/NA	Water	353.2	
LCS 680-382751/15	Lab Control Sample	Total/NA	Water	353.2	
MB 680-382751/13	Method Blank	Total/NA	Water	353.2	

Lab Chronicle

Client: Tetra Tech, Inc.
Project/Site: Lake Monroe

TestAmerica Job ID: 660-66743-1

Client Sample ID: Wheeling PS stormwater

Lab Sample ID: 660-66743-1

Date Collected: 05/06/15 14:15

Matrix: Water

Date Received: 05/07/15 09:35

Prep Type	Batch Type	Batch Method	Run	Dilution Factor	Batch Number	Prepared or Analyzed	Analyst	Lab
Total/NA	Analysis	300.0		1	382467	05/09/15 02:04	SMC	TAL SAV
Total/NA	Analysis	300.0		2	382805	05/12/15 14:40	AJO	TAL SAV
Total Recoverable	Prep	3005A			157734	05/07/15 14:30	GH1	TAL TAM
Total Recoverable	Analysis	6010B		1	157752	05/08/15 09:00	GAF	TAL TAM
Total/NA	Prep	7470A			157841	05/12/15 12:10	GH1	TAL TAM
Total/NA	Analysis	7470A		1	157847	05/12/15 17:25	GH1	TAL TAM
Total/NA	Analysis	350.1		1	382435	05/08/15 15:56	JME	TAL SAV
Total/NA	Prep	Digestion			382138	05/08/15 09:25	JRJ	TAL SAV
Total/NA	Analysis	351.2		1	382537	05/11/15 13:00	JER	TAL SAV
Total/NA	Analysis	353.2		1	382751	05/12/15 16:28	GRX	TAL SAV
Total/NA	Prep	Digestion			382138	05/08/15 09:25	JRJ	TAL SAV
Total/NA	Analysis	365.4		1	382536	05/11/15 13:00	JER	TAL SAV
Total/NA	Analysis	4500 S2 F-2011		1	382508	05/11/15 11:46	JRJ	TAL SAV
Total/NA	Analysis	SM 2120B		1	157746	05/08/15 05:40	AJG	TAL TAM
Total/NA	Analysis	SM 2130B		1	157748	05/08/15 07:46	AJG	TAL TAM
Total/NA	Analysis	SM 2320B		1	157750	05/08/15 05:45	AJG	TAL TAM
Total/NA	Analysis	SM 2540C		1	157772	05/08/15 13:56	SC1	TAL TAM
Total/NA	Analysis	SM 2540D		1	157729	05/07/15 10:50	SC1	TAL TAM
Total/NA	Analysis	SM 4500 H+ B		1	157730	05/07/15 11:45	AJG	TAL TAM
Dissolved	Analysis	SM 4500 P E		1	157735	05/07/15 10:45	ELE	TAL TAM
Total/NA	Analysis	SM 5310B		1	256821	05/11/15 18:26	JMH	TAL PEN
Total/NA	Analysis	Total Nitrogen		1	382555	05/11/15 15:40	JER	TAL SAV

Laboratory References:

ENCO = ENCO-Orlando, 10775 Central Port Drive, Orlando, FL 32824, TEL (407)826-5314

TAL PEN = TestAmerica Pensacola, 3355 McLemore Drive, Pensacola, FL 32514, TEL (850)474-1001

TAL SAV = TestAmerica Savannah, 5102 LaRoche Avenue, Savannah, GA 31404, TEL (912)354-7858

TAL TAM = TestAmerica Tampa, 6712 Benjamin Road, Suite 100, Tampa, FL 33634, TEL (813)885-7427

Method Summary

Client: Tetra Tech, Inc.
Project/Site: Lake Monroe

TestAmerica Job ID: 660-66743-1

Method	Method Description	Protocol	Laboratory
300.0	Anions, Ion Chromatography	MCAWW	TAL SAV
6010B	Metals (ICP)	SW846	TAL TAM
7470A	Mercury (CVAA)	SW846	TAL TAM
350.1	Nitrogen, Ammonia	MCAWW	TAL SAV
351.2	Nitrogen, Total Kjeldahl	MCAWW	TAL SAV
353.2	Nitrogen, Nitrate-Nitrite	MCAWW	TAL SAV
365.4	Phosphorus, Total	EPA	TAL SAV
4500 S2 F-2011	Sulfide, Total	SM	TAL SAV
SM 2120B	Color, Colorimetric	SM	TAL TAM
SM 2130B	Turbidity	SM	TAL TAM
SM 2320B	Alkalinity	SM	TAL TAM
SM 2540C	Solids, Total Dissolved (TDS)	SM	TAL TAM
SM 2540D	Solids, Total Suspended (TSS)	SM	TAL TAM
SM 4500 H+ B	pH	SM	TAL TAM
SM 4500 P E	Orthophosphate	SM	TAL TAM
SM 5310B	Organic Carbon, Total (TOC)	SM	TAL PEN
Total Nitrogen	Nitrogen, Total	EPA	TAL SAV
Chlorophyll A ug/L	Chlorophyll A	NONE	ENCO

Protocol References:

EPA = US Environmental Protection Agency
MCAWW = "Methods For Chemical Analysis Of Water And Wastes", EPA-600/4-79-020, March 1983 And Subsequent Revisions.
NONE = NONE
SM = "Standard Methods For The Examination Of Water And Wastewater",
SW846 = "Test Methods For Evaluating Solid Waste, Physical/Chemical Methods", Third Edition, November 1986 And Its Updates.

Laboratory References:

ENCO = ENCO-Orlando, 10775 Central Port Drive, Orlando, FL 32824, TEL (407)826-5314
TAL PEN = TestAmerica Pensacola, 3355 McLemore Drive, Pensacola, FL 32514, TEL (850)474-1001
TAL SAV = TestAmerica Savannah, 5102 LaRoche Avenue, Savannah, GA 31404, TEL (912)354-7858
TAL TAM = TestAmerica Tampa, 6712 Benjamin Road, Suite 100, Tampa, FL 33634, TEL (813)885-7427

Certification Summary

Client: Tetra Tech, Inc.
Project/Site: Lake Monroe

TestAmerica Job ID: 660-66743-1

Laboratory: TestAmerica Tampa

Unless otherwise noted, all analytes for this laboratory were covered under each certification below.

Authority	Program	EPA Region	Certification ID	Expiration Date
Florida	NELAP	4	E84282	06-30-15 *

The following analytes are included in this report, but are not certified under this certification:

Analysis Method	Prep Method	Matrix	Analyte
SM 2120B		Water	pH at time of analysis

Laboratory: TestAmerica Pensacola

All certifications held by this laboratory are listed. Not all certifications are applicable to this report.

Authority	Program	EPA Region	Certification ID	Expiration Date
Alabama	State Program	4	40150	06-30-15
Arizona	State Program	9	AZ0710	01-11-16
Arkansas DEQ	State Program	6	88-0689	09-01-15
Florida	NELAP	4	E81010	06-30-15
Georgia	State Program	4	N/A	06-30-15
Illinois	NELAP	5	200041	10-09-15
Iowa	State Program	7	367	07-31-16
Kansas	NELAP	7	E-10253	05-31-15 *
Kentucky (UST)	State Program	4	53	06-30-15
Kentucky (WW)	State Program	4	98030	12-31-15
Louisiana	NELAP	6	30976	06-30-15
Maryland	State Program	3	233	09-30-15
Massachusetts	State Program	1	M-FL094	06-30-15
Michigan	State Program	5	9912	06-30-15
New Jersey	NELAP	2	FL006	06-30-15
North Carolina (WW/SW)	State Program	4	314	12-31-15
Oklahoma	State Program	6	9810	08-31-15
Pennsylvania	NELAP	3	68-00467	01-31-16
Rhode Island	State Program	1	LAO00307	12-30-15
South Carolina	State Program	4	96026	06-30-15
Tennessee	State Program	4	TN02907	06-30-15
Texas	NELAP	6	T104704286-12-5	09-30-15
USDA	Federal		P330-13-00193	07-01-16
Virginia	NELAP	3	460166	06-14-15
West Virginia DEP	State Program	3	136	06-30-15

Laboratory: TestAmerica Savannah

Unless otherwise noted, all analytes for this laboratory were covered under each certification below.

Authority	Program	EPA Region	Certification ID	Expiration Date
Florida	NELAP	4	E87052	06-30-15

The following analytes are included in this report, but certification is not offered by the governing authority:

Analysis Method	Prep Method	Matrix	Analyte
Total Nitrogen		Water	Nitrogen, Total

* Certification renewal pending - certification considered valid.

ENCO Laboratories

Accurate. Timely. Responsive. Innovative.

10775 Central Port Drive
Orlando FL, 32824
Phone: 407.826.5314 FAX: 407.850.6945

Thursday, May 14, 2015
Test America - Tampa (TE022)
Attn: Nancy Robertson
6712 Benjamin Road, Suite 100
Tampa, FL 33634

RE: Laboratory Results for
Project Number: 660-66743-1, Project Name/Desc: Test America -
ENCO Workorder(s): A502883

Dear Nancy Robertson,

Enclosed is a copy of your laboratory report for test samples received by our laboratory on Thursday, May 7, 2015.

Unless otherwise noted in an attached project narrative, all samples were received in acceptable condition and processed in accordance with the referenced methods/procedures. Results for these procedures apply only to the samples as submitted.

The analytical results contained in this report are in compliance with NELAC standards, except as noted in the project narrative. This report shall not be reproduced except in full, without the written approval of the Laboratory.

This report contains only those analyses performed by Environmental Conservation Laboratories. Unless otherwise noted, all analyses were performed at ENCO Orlando. Data from outside organizations will be reported under separate cover.

If you have any questions or require further information, please do not hesitate to contact me.

Sincerely,

Ronald Wambles For David Camacho

Project Manager

Enclosure(s)

SAMPLE SUMMARY/LABORATORY CHRONICLE

Client ID: Wheeling PS stormwater (660-66743-1) **Lab ID:** A502883-01 **Sampled:** 05/06/15 14:15 **Received:** 05/07/15 11:59

Parameter	Hold Date/Time(s)			Prep Date/Time(s)		Analysis Date/Time(s)	
SM 10200H-2001	05/08/15	14:15	05/21/15	05/07/15	13:45	05/14/15	10:26

SAMPLE DETECTION SUMMARY

Client ID: Wheeling PS stormwater (660-66743-1) **Lab ID:** A502883-01

Analyte	Results	Flag	MDL	PQL	Units	Method	Notes
Chlorophyll a	9.1		0.50	0.50	ug/L	SM 10200H-2001	

www.encolabs.com

ANALYTICAL RESULTS

Description: Wheeling PS stormwater (660-66743-1) **Lab Sample ID:** A502883-01 **Received:** 05/07/15 11:59

Matrix: Water **Sampled:** 05/06/15 14:15 **Work Order:** A502883

Project: Test America - **Sampled By:**

Classical Chemistry Parameters

^ - ENCO Orlando certified analyte [NELAC E83182]

Analyte [CAS Number]	Results	Flag	Units	DF	MDL	PQL	Batch	Method	Analyzed	By	Notes
Chlorophyll a [42617-16-3]^	**9.1**		ug/L	1	0.50	0.50	5E07049	SM 10200H-2001	05/14/15 10:26	M1N	

QUALITY CONTROL DATA

Classical Chemistry Parameters - Quality Control

Batch 5E07049 - NO PREP

Blank (5E07049-BLK1) Prepared: 05/07/2015 13:45 Analyzed: 05/14/2015 10:26

Analyte	Result	Flag	POL	Units	Spike Level	Source Result	%REC	%REC Limits	RPD	RPD Limit	Notes
Chlorophyll a	0.50	U	0.50	ug/L							

Duplicate (5E07049-DUP1) Prepared: 05/07/2015 13:45 Analyzed: 05/14/2015 10:26

Source: A502883-01

Analyte	Result	Flag	POL	Units	Spike Level	Source Result	%REC	%REC Limits	RPD	RPD Limit	Notes
Chlorophyll a	8.0		0.50	ug/L		9.1			12	25	

FLAGS/NOTES AND DEFINITIONS

PQL	PQL: Practical Quantitation Limit.
B	Results are based upon membrane filter colony counts that are outside the method indicated ideal range.
I	The reported value is between the laboratory method detection limit (MDL) and the practical quantitation limit (PQL).
J	Estimated value.
K	Off-scale low; Actual value is known to be less than the value given.
L	Off-scale high; Actual value is known to be greater than value given.
M	Presence of analyte is verified but not quantified; the actual value is less than the MRL but greater than the MDL.
N	Presumptive evidence of presence of material.
O	Sampled, but analysis lost or not performed.
Q	Sample exceeded the accepted holding time.
T	Value reported is less than the laboratory method detection limit. The value is reported for informational purposes only and shall not be used in statistical analysis.
U	Indicates that the compound was analyzed for but not detected.
V	Indicates that the analyte was detected in both the sample and the associated method blank.
Y	The laboratory analysis was from an improperly preserved sample. The data may not be accurate.
Z	Too many colonies were present (TNTC); the numeric value represents the filtration volume.
?	Data are rejected and should not be used. Some or all of the quality control data for the analyte were outside criteria, and the presence or absence of the analyte cannot be determined from the data.
*****	Not reported due to interference.

TestAmerica Tampa
6712 Benjamin Road Suite 100
Tampa, FL 33634
Phone (813) 885-7427 Fax (813) 885-7049

Chain of Custody Record

TestAmerica
THE LEADER IN ENVIRONMENTAL TESTING

Client Information (Sub Contract Lab)	Sampler:	Lab PM: Robertson, Nancy	Carrier Tracking No(s):	COC No: 660-77850.1
Client Contact: Shipping/Receiving	Phone:	E-Mail: nancy.robertson@testamericainc.com		Page: Page 1 of 1
Company: Environmental Conservation Laboratories				Job #: 660-66743-1
Address: 10775 Central Port Drive,	Due Date Requested: 5/13/2015			
City: Orlando	TAT Requested (days):			
State, Zip: FL, 32824				
Phone: 407-826-5314(Tel)	PO #:			
Email:	WO #:			
Project Name: Lake Monroe	Project #: 66008532			
Site:	SSOW#:			

Analysis Requested

Preservation Codes:
A - HCL, B - NaOH, C - Zn Acetate, D - Nitric Acid, E - NaHSO4, F - MeOH, G - Amchlor, H - Ascorbic Acid, I - Ice, J - DI Water, K - EDTA, L - EDA, M - Hexane, N - None, O - AsNaO2, P - Na2O4S, Q - Na2SO3, R - Na2S2SO3, S - H2SO4, T - TSP Dodecahydrate, U - Acetone, V - MCAA, W - ph 4-5, Z - other (specify)
Other:

A502583

Sample Identification - Client ID (Lab ID)	Sample Date	Sample Time	Sample Type (C=comp, G=grab)	Matrix (W=water, S=solid, O=waste/oil, BT=Tissue, A=Air)	Field Filtered Sample (Yes or No)	Perform MS/MSD (Yes or No)	SUB (Chlorophyll A ug/L) Chlorophyll A ug/L	Total Number of containers	Special Instructions/Note:
			Preservation Code:						
Wheeling PS stormwater (660-66743-1)	5/6/15	14:15 Eastern	C	Water			X	1	Our price = $45

Possible Hazard Identification *Unconfirmed*	***Sample Disposal (A fee may be assessed if samples are retained longer than 1 month)*** ☐ *Return To Client* ☐ *Disposal By Lab* ☐ *Archive For* _____ *Months*
Deliverable Requested: I, II, III, IV, Other (specify)	Special Instructions/QC Requirements:

Empty Kit Relinquished by:	Date:	Time:		Method of Shipment:	
Relinquished by: Jennifer Bates	Date/Time: 5-7-15 11:59	Company: TAcolumbia	Received by:	Date/Time: 05/07/15 11:59	Company
Relinquished by:	Date/Time:	Company	Received by: Brandy Hare	Date/Time: 5-7-15 1159	Company: ENCO
Relinquished by:	Date/Time:	Company	Received by:	Date/Time	Company
Custody Seals Intact: Δ Yes Δ No	Custody Seal No.:		Cooler Temperature(s) °C and Other Remarks: 3.3C		

5/16/2015

TestAmerica Tampa
6712 Benjamin Road Suite 100
Tampa, FL 33634
Phone (813) 885-7427 Fax (813) 885-7049

Chain of Custody Record

TestAmerica
THE LEADER IN ENVIRONMENTAL TESTING

Client Information	Sampler:	Lab PM: Robertson, Nancy	Carrier Tracking No(s):	COC No: 660-62248-19984.1
Client Contact: Rasesh Shah	Phone:	E-Mail: nancy.robertson@testamericainc.com		Page: Page 1 of 1
Company: Tetra Tech, Inc.				Job #:
Address: 201 E. Pine St., Ste. 1000	Due Date Requested:			
City: Orlando	TAT Requested (days):			
State, Zip: FL, 32801				
Phone:	PO #: Purchase Order Requested			
Email: rasesh.shah@tetratech.com	WO #:			
Project Name: Lake Monroe	Project #: 66008532			
Site:	SSOW#:			

Analysis Requested

Sample Identification	Sample Date	Sample Time	Sample Type (C=comp, G=grab)	Matrix (W=water, S=solid, O=waste/oil, BT=Tissue, A=Air)	Field Filtered Sample (Yes or No)	Perform MS/MSD (Yes or No)	2540C, 2540D	2320B, SM2130B, SM4500_H+	4500_P_E_Ortho - Orthophosphate	6010B, 7470A	2120B - Color	SUBCONTRACT - Chlorophyll A ug/L	9222D - Coliform, Fecal	300_ORGFM_28D - Chloride & Sulfate	350.1 - Ammonia as N	SM4500_S2_F - Total Sulfide	351.2, 353.2_Pres, 365.4, Nitrogen,Total	SM5310_TOC_B - Total Organic Carbon		Total Number of containers	Special Instructions/Note:
			Preservation Code:				N	N	N	D	N	N	R	N	S	CB	S	S			
CLEARWATER LAKE	5-6-15	13:15	G	Water			X	X	X	X	X	X		X	X	X	X	X	X		
				Water																	

Loc: 660
66743
660-66743 Chain of Custody

Preservation Codes:

A - HCL	M - Hexane
B - NaOH	N - None
C - Zn Acetate	O - AsNaO2
D - Nitric Acid	P - Na2O4S
E - NaHSO4	Q - Na2SO3
F - MeOH	R - Na2S2SO3
G - Amchlor	S - H2SO4
H - Ascorbic Acid	T - TSP Dodecahydrate
I - Ice	U - Acetone
J - DI Water	V - MCAA
K - EDTA	W - ph 4-5
L - EDA	Z - other (specify)

Other:

Possible Hazard Identification
☐ Non-Hazard ☐ Flammable ☐ Skin Irritant ☐ Poison B ☐ Unknown ☐ Radiological

Sample Disposal (A fee may be assessed if samples are retained longer than 1 month)
☐ Return To Client ☐ Disposal By Lab ☐ Archive For _____ Months

Deliverable Requested: I, II, III, IV, Other (specify)

Special Instructions/QC Requirements:

Empty Kit Relinquished by:	Date: 4-17-15	Time: 13:30			Method of Shipment: lab courier	
Relinquished by:	Date/Time: 5-6-15 14:55	Company	Received by:	Date/Time: 5/6/15 @ 1520	Company TA Orlando	
Relinquished by:	Date/Time: 5-6-15 1716	Company TA Orl	Received by:	Date/Time: 5-7-15 0935	Company TA TPA	
Relinquished by:	Date/Time:	Company	Received by:	Date/Time:	Company	

Custody Seals Intact: Δ Yes Δ No
Custody Seal No.:
Cooler Temperature(s) °C and Other Remarks: 02/0.7 W-09

Login Sample Receipt Checklist

Client: Tetra Tech, Inc.

Job Number: 660-66743-1

Login Number: 66743
List Number: 1
Creator: Southers, Kristin B

List Source: TestAmerica Tampa

Question	Answer	Comment
Radioactivity wasn't checked or is </= background as measured by a survey meter.	N/A	
The cooler's custody seal, if present, is intact.	True	
Sample custody seals, if present, are intact.	True	
The cooler or samples do not appear to have been compromised or tampered with.	True	
Samples were received on ice.	True	
Cooler Temperature is acceptable.	True	
Cooler Temperature is recorded.	True	
COC is present.	True	
COC is filled out in ink and legible.	True	
COC is filled out with all pertinent information.	True	
Is the Field Sampler's name present on COC?	True	
There are no discrepancies between the containers received and the COC.	True	
Samples are received within Holding Time.	True	
Sample containers have legible labels.	True	
Containers are not broken or leaking.	True	
Sample collection date/times are provided.	True	
Appropriate sample containers are used.	True	
Sample bottles are completely filled.	True	
Sample Preservation Verified.	True	
There is sufficient vol. for all requested analyses, incl. any requested MS/MSDs	True	
Containers requiring zero headspace have no headspace or bubble is <6mm (1/4").	N/A	
Multiphasic samples are not present.	True	
Samples do not require splitting or compositing.	True	
Residual Chlorine Checked.	N/A	

Login Sample Receipt Checklist

Client: Tetra Tech, Inc.

Job Number: 660-66743-1

Login Number: 66743
List Number: 3
Creator: Menoher, Rachel C

List Source: TestAmerica Pensacola
List Creation: 05/08/15 10:54 AM

Question	Answer	Comment
Radioactivity wasn't checked or is </= background as measured by a survey meter.	N/A	
The cooler's custody seal, if present, is intact.	True	
Sample custody seals, if present, are intact.	N/A	
The cooler or samples do not appear to have been compromised or tampered with.	True	
Samples were received on ice.	True	
Cooler Temperature is acceptable.	True	
Cooler Temperature is recorded.	True	3.4 °C IR2
COC is present.	True	
COC is filled out in ink and legible.	True	
COC is filled out with all pertinent information.	True	
Is the Field Sampler's name present on COC?	True	
There are no discrepancies between the containers received and the COC.	True	
Samples are received within Holding Time.	True	
Sample containers have legible labels.	True	
Containers are not broken or leaking.	True	
Sample collection date/times are provided.	True	
Appropriate sample containers are used.	True	
Sample bottles are completely filled.	True	
Sample Preservation Verified.	True	
There is sufficient vol. for all requested analyses, incl. any requested MS/MSDs	True	
Containers requiring zero headspace have no headspace or bubble is <6mm (1/4").	True	
Multiphasic samples are not present.	True	
Samples do not require splitting or compositing.	True	
Residual Chlorine Checked.	N/A	

Login Sample Receipt Checklist

Client: Tetra Tech, Inc.

Job Number: 660-66743-1

Login Number: 66743
List Number: 2
Creator: White, Menica R

List Source: TestAmerica Savannah
List Creation: 05/08/15 08:50 AM

Question	Answer	Comment
Radioactivity wasn't checked or is </= background as measured by a survey meter.	N/A	
The cooler's custody seal, if present, is intact.	True	
Sample custody seals, if present, are intact.	True	
The cooler or samples do not appear to have been compromised or tampered with.	True	
Samples were received on ice.	True	
Cooler Temperature is acceptable.	True	
Cooler Temperature is recorded.	True	
COC is present.	True	
COC is filled out in ink and legible.	True	
COC is filled out with all pertinent information.	True	
Is the Field Sampler's name present on COC?	N/A	
There are no discrepancies between the containers received and the COC.	True	
Samples are received within Holding Time.	True	
Sample containers have legible labels.	True	
Containers are not broken or leaking.	True	
Sample collection date/times are provided.	True	
Appropriate sample containers are used.	True	
Sample bottles are completely filled.	True	
Sample Preservation Verified.	True	
There is sufficient vol. for all requested analyses, incl. any requested MS/MSDs	True	
Containers requiring zero headspace have no headspace or bubble is <6mm (1/4").	N/A	
Multiphasic samples are not present.	True	
Samples do not require splitting or compositing.	True	
Residual Chlorine Checked.	N/A	

7. Tivoli Wheeling Pump Station Water Analytical Testing Report (During Rain Event) (05/26/2015)

TestAmerica

THE LEADER IN ENVIRONMENTAL TESTING

ANALYTICAL REPORT

TestAmerica Laboratories, Inc.
TestAmerica Tampa
6712 Benjamin Road
Suite 100
Tampa, FL 33634
Tel: (813)885-7427

TestAmerica Job ID: 660-66927-1
Client Project/Site: Lake Monroe

For:
Tetra Tech, Inc.
201 E. Pine St., Ste. 1000
Orlando, Florida 32801

Attn: Rasesh Shah

Authorized for release by:
5/26/2015 12:46:20 PM

Nancy Robertson, Project Manager II
(813)885-7427
nancy.robertson@testamericainc.com

LINKS

Review your project results through TotalAccess

Have a Question? Ask The Expert

Visit us at: www.testamericainc.com

The test results in this report meet all 2003 NELAC and 2009 TNI requirements for accredited parameters, exceptions are noted in this report. This report may not be reproduced except in full, and with written approval from the laboratory. For questions please contact the Project Manager at the e-mail address or telephone number listed on this page.

This report has been electronically signed and authorized by the signatory. Electronic signature is intended to be the legally binding equivalent of a traditionally handwritten signature.

Results relate only to the items tested and the sample(s) as received by the laboratory.

Table of Contents

Cover Page 1
Table of Contents 2
Sample Summary 3
Case Narrative 4
Definitions/Glossary 5
Detection Summary 6
Client Sample Results 7
QC Sample Results 8
QC Association Summary 18
Lab Chronicle 22
Method Summary 23
Certification Summary 24
Subcontract Data 25
Chain of Custody 32
Receipt Checklists 33

Sample Summary

Client: Tetra Tech, Inc.
Project/Site: Lake Monroe

TestAmerica Job ID: 660-66927-1

Lab Sample ID	Client Sample ID	Matrix	Collected	Received
660-66927-1	Wheeling PS Stormwater	Water	05/15/15 09:35	05/16/15 12:35
660-66927-2	Wheeling PS Stormwater (Set 2)	Water	05/15/15 09:35	05/16/15 12:35

Job ID: 660-66927-1

Laboratory: TestAmerica Tampa

Narrative

Job Narrative
660-66927-1

Comments
No additional comments.

Receipt
The samples were received on 5/16/2015 12:35 PM; the samples arrived in good condition, properly preserved and, where required, on ice. The temperature of the cooler at receipt was 1.5º C.

HPLC/IC
No analytical or quality issues were noted, other than those described in the Definitions/Glossary page.

Metals
No analytical or quality issues were noted, other than those described in the Definitions/Glossary page.

General Chemistry
Method SM 4500 H+ B: The method requested is normally performed in the field, and performing this method in the laboratory may produce biased results.

No additional analytical or quality issues were noted, other than those described above or in the Definitions/Glossary page.

Subcontract non-Sister
The Chlorophyll-A and coliforms were subcontracted to ENCO labs.

Definitions/Glossary

Client: Tetra Tech, Inc.
Project/Site: Lake Monroe

TestAmerica Job ID: 660-66927-1

Qualifiers

HPLC/IC

Qualifier	Qualifier Description
U	Indicates that the compound was analyzed for but not detected.

Metals

Qualifier	Qualifier Description
U	Indicates that the compound was analyzed for but not detected.
I	The reported value is between the laboratory method detection limit and the laboratory practical quantitation limit.

General Chemistry

Qualifier	Qualifier Description
U	Indicates that the compound was analyzed for but not detected.
Q	Sample held beyond the accepted holding time.

Glossary

Abbreviation	These commonly used abbreviations may or may not be present in this report.
¤	Listed under the "D" column to designate that the result is reported on a dry weight basis
%R	Percent Recovery
CFL	Contains Free Liquid
CNF	Contains no Free Liquid
DER	Duplicate error ratio (normalized absolute difference)
Dil Fac	Dilution Factor
DL, RA, RE, IN	Indicates a Dilution, Re-analysis, Re-extraction, or additional Initial metals/anion analysis of the sample
DLC	Decision level concentration
MDA	Minimum detectable activity
EDL	Estimated Detection Limit
MDC	Minimum detectable concentration
MDL	Method Detection Limit
ML	Minimum Level (Dioxin)
NC	Not Calculated
ND	Not detected at the reporting limit (or MDL or EDL if shown)
PQL	Practical Quantitation Limit
QC	Quality Control
RER	Relative error ratio
RL	Reporting Limit or Requested Limit (Radiochemistry)
RPD	Relative Percent Difference, a measure of the relative difference between two points
TEF	Toxicity Equivalent Factor (Dioxin)
TEQ	Toxicity Equivalent Quotient (Dioxin)

Detection Summary

Client: Tetra Tech, Inc.
Project/Site: Lake Monroe

TestAmerica Job ID: 660-66927-1

Client Sample ID: Wheeling PS Stormwater — Lab Sample ID: 660-66927-1

Analyte	Result	Qualifier	PQL	MDL	Unit	Dil Fac	D	Method	Prep Type
Chloride	71		1.0	0.40	mg/L	2		300.0	Total/NA
Sulfate	17		1.0	0.40	mg/L	1		300.0	Total/NA
Iron	0.17	I	0.20	0.050	mg/L	1		6010B	Total Recoverable
Manganese	0.0026	I	0.0040	0.0010	mg/L	1		6010B	Total Recoverable
Zinc	0.0094	I	0.020	0.0050	mg/L	1		6010B	Total Recoverable
Nitrogen, Kjeldahl	0.55		0.20	0.10	mg/L	1		351.2	Total/NA
Nitrate Nitrite as N	2.0		0.50	0.10	mg/L	10		353.2	Total/NA
Color	35		5.0	5.0	PCU	1		SM 2120B	Total/NA
pH at time of analysis	7.1		1.0	1.0	SU	1		SM 2120B	Total/NA
Turbidity	0.77		0.50	0.50	NTU	1		SM 2130B	Total/NA
Alkalinity as CaCO3	42		1.0	1.0	mg/L	1		SM 2320B	Total/NA
Total Dissolved Solids	200		5.0	5.0	mg/L	1		SM 2540C	Total/NA
pH	7.49	Q			SU	1		SM 4500 H+ B	Total/NA
Temperature	22.7	Q			Degrees C	1		SM 4500 H+ B	Total/NA
Total Organic Carbon	10		1.0	0.50	mg/L	1		SM 5310B	Total/NA
Nitrogen, Total	2.6		0.25	0.25	mg/L	1		Total Nitrogen	Total/NA

Client Sample ID: Wheeling PS Stormwater (Set 2) — Lab Sample ID: 660-66927-2

No Detections.

This Detection Summary does not include radiochemical test results.

Client Sample Results

Client: Tetra Tech, Inc.
Project/Site: Lake Monroe

TestAmerica Job ID: 660-66927-1

Client Sample ID: Wheeling PS Stormwater

Lab Sample ID: 660-66927-1

Date Collected: 05/15/15 09:35
Matrix: Water
Date Received: 05/16/15 12:35

Method: 300.0 - Anions, Ion Chromatography

Analyte	Result	Qualifier	PQL	MDL	Unit	D	Prepared	Analyzed	Dil Fac
Chloride	71		1.0	0.40	mg/L			05/21/15 03:22	2
Sulfate	17		1.0	0.40	mg/L			05/21/15 04:06	1

Method: 6010B - Metals (ICP) - Total Recoverable

Analyte	Result	Qualifier	PQL	MDL	Unit	D	Prepared	Analyzed	Dil Fac
Cadmium	0.0010	U	0.0040	0.0010	mg/L		05/19/15 07:25	05/19/15 11:13	1
Iron	0.17	I	0.20	0.050	mg/L		05/19/15 07:25	05/19/15 11:13	1
Manganese	0.0026	I	0.0040	0.0010	mg/L		05/19/15 07:25	05/19/15 11:13	1
Nickel	0.0020	U	0.0080	0.0020	mg/L		05/19/15 07:25	05/19/15 11:13	1
Zinc	0.0094	I	0.020	0.0050	mg/L		05/19/15 07:25	05/19/15 11:13	1

Method: 7470A - Mercury (CVAA)

Analyte	Result	Qualifier	PQL	MDL	Unit	D	Prepared	Analyzed	Dil Fac
Mercury	0.072	U	0.20	0.072	ug/L		05/19/15 12:50	05/19/15 18:24	1

General Chemistry

Analyte	Result	Qualifier	PQL	MDL	Unit	D	Prepared	Analyzed	Dil Fac
Ammonia as N	0.10	U	0.25	0.10	mg/L			05/20/15 12:23	1
Nitrogen, Kjeldahl	0.55		0.20	0.10	mg/L		05/19/15 11:59	05/20/15 10:39	1
Nitrate Nitrite as N	2.0		0.50	0.10	mg/L			05/19/15 15:58	10
Phosphorus, Total	0.041	U	0.10	0.041	mg/L		05/19/15 11:59	05/20/15 10:39	1
Total Sulfide	1.0	U	1.0	1.0	mg/L			05/20/15 09:18	1
Color	35		5.0	5.0	PCU			05/16/15 13:20	1
pH at time of analysis	7.1		1.0	1.0	SU			05/16/15 13:20	1
Turbidity	0.77		0.50	0.50	NTU			05/16/15 14:00	1
Alkalinity as CaCO3	42		1.0	1.0	mg/L			05/20/15 05:50	1
Total Dissolved Solids	200		5.0	5.0	mg/L			05/18/15 12:54	1
Total Suspended Solids	1.3	U	1.3	1.3	mg/L			05/17/15 15:16	1
pH	7.49	Q			SU			05/18/15 12:20	1
Temperature	22.7	Q			Degrees C			05/18/15 12:20	1
Total Organic Carbon	10		1.0	0.50	mg/L			05/21/15 22:09	1
Nitrogen, Total	2.6		0.25	0.25	mg/L			05/20/15 13:02	1

General Chemistry - Dissolved

Analyte	Result	Qualifier	PQL	MDL	Unit	D	Prepared	Analyzed	Dil Fac
Orthophosphate	0.0050	U	0.010	0.0050	mg/L			05/16/15 13:30	1

QC Sample Results

Client: Tetra Tech, Inc.
Project/Site: Lake Monroe

TestAmerica Job ID: 660-66927-1

Method: 300.0 - Anions, Ion Chromatography

Lab Sample ID: MB 680-384103/59
Matrix: Water
Analysis Batch: 384103

Client Sample ID: Method Blank
Prep Type: Total/NA

Analyte	MB Result	MB Qualifier	PQL	MDL	Unit	D	Prepared	Analyzed	Dil Fac
Chloride	0.20	U	0.50	0.20	mg/L			05/21/15 02:10	1
Sulfate	0.40	U	1.0	0.40	mg/L			05/21/15 02:10	1

Lab Sample ID: LCS 680-384103/60
Matrix: Water
Analysis Batch: 384103

Client Sample ID: Lab Control Sample
Prep Type: Total/NA

Analyte	Spike Added	LCS Result	LCS Qualifier	Unit	D	%Rec	%Rec. Limits
Chloride	10.0	9.71		mg/L		97	90 - 110
Sulfate	10.0	9.24		mg/L		92	90 - 110

Lab Sample ID: LCSD 680-384103/61
Matrix: Water
Analysis Batch: 384103

Client Sample ID: Lab Control Sample Dup
Prep Type: Total/NA

Analyte	Spike Added	LCSD Result	LCSD Qualifier	Unit	D	%Rec	%Rec. Limits	RPD	RPD Limit
Chloride	10.0	9.75		mg/L		97	90 - 110	0	30
Sulfate	10.0	9.30		mg/L		93	90 - 110	1	30

Lab Sample ID: 660-66927-1 MS
Matrix: Water
Analysis Batch: 384103

Client Sample ID: Wheeling PS Stormwater
Prep Type: Total/NA

Analyte	Sample Result	Sample Qualifier	Spike Added	MS Result	MS Qualifier	Unit	D	%Rec	%Rec. Limits
Chloride	71		20.0	91.2		mg/L		99	80 - 120
Sulfate	17		20.0	36.8		mg/L		101	80 - 120

Lab Sample ID: 660-66927-1 MSD
Matrix: Water
Analysis Batch: 384103

Client Sample ID: Wheeling PS Stormwater
Prep Type: Total/NA

Analyte	Sample Result	Sample Qualifier	Spike Added	MSD Result	MSD Qualifier	Unit	D	%Rec	%Rec. Limits	RPD	RPD Limit
Chloride	71		20.0	90.2		mg/L		94	80 - 120	1	30
Sulfate	17		20.0	36.4		mg/L		99	80 - 120	1	30

Method: 6010B - Metals (ICP)

Lab Sample ID: MB 660-158022/1-A
Matrix: Water
Analysis Batch: 158023

Client Sample ID: Method Blank
Prep Type: Total Recoverable
Prep Batch: 158022

Analyte	MB Result	MB Qualifier	PQL	MDL	Unit	D	Prepared	Analyzed	Dil Fac
Cadmium	0.0010	U	0.0040	0.0010	mg/L		05/19/15 07:25	05/19/15 11:03	1
Iron	0.050	U	0.20	0.050	mg/L		05/19/15 07:25	05/19/15 11:03	1
Manganese	0.0010	U	0.0040	0.0010	mg/L		05/19/15 07:25	05/19/15 11:03	1
Nickel	0.0020	U	0.0080	0.0020	mg/L		05/19/15 07:25	05/19/15 11:03	1
Zinc	0.0050	U	0.020	0.0050	mg/L		05/19/15 07:25	05/19/15 11:03	1

Method: 6010B - Metals (ICP) (Continued)

Lab Sample ID: LCS 660-158022/2-A — **Client Sample ID: Lab Control Sample**
Matrix: Water — **Prep Type: Total Recoverable**
Analysis Batch: 158023 — **Prep Batch: 158022**

Analyte	Spike Added	LCS Result	LCS Qualifier	Unit	D	%Rec	%Rec. Limits
Cadmium	1.00	1.00		mg/L		100	80 - 120
Iron	1.00	1.02		mg/L		102	80 - 120
Manganese	1.00	1.04		mg/L		104	80 - 120
Nickel	1.00	1.03		mg/L		103	80 - 120
Zinc	1.00	1.04		mg/L		104	80 - 120

Lab Sample ID: 660-66927-1 MS — **Client Sample ID: Wheeling PS Stormwater**
Matrix: Water — **Prep Type: Total Recoverable**
Analysis Batch: 158023 — **Prep Batch: 158022**

Analyte	Sample Result	Sample Qualifier	Spike Added	MS Result	MS Qualifier	Unit	D	%Rec	%Rec. Limits
Cadmium	0.0010	U	1.00	1.01		mg/L		101	80 - 120
Iron	0.17	I	1.00	1.18		mg/L		101	80 - 120
Manganese	0.0026	I	1.00	1.03		mg/L		102	80 - 120
Nickel	0.0020	U	1.00	1.01		mg/L		101	80 - 120
Zinc	0.0094	I	1.00	1.07		mg/L		106	80 - 120

Lab Sample ID: 660-66927-1 MSD — **Client Sample ID: Wheeling PS Stormwater**
Matrix: Water — **Prep Type: Total Recoverable**
Analysis Batch: 158023 — **Prep Batch: 158022**

Analyte	Sample Result	Sample Qualifier	Spike Added	MSD Result	MSD Qualifier	Unit	D	%Rec	%Rec. Limits	RPD	RPD Limit
Cadmium	0.0010	U	1.00	1.01		mg/L		101	80 - 120	0	20
Iron	0.17	I	1.00	1.18		mg/L		101	80 - 120	0	20
Manganese	0.0026	I	1.00	1.03		mg/L		103	80 - 120	0	20
Nickel	0.0020	U	1.00	1.02		mg/L		102	80 - 120	0	20
Zinc	0.0094	I	1.00	1.07		mg/L		106	80 - 120	0	20

Method: 7470A - Mercury (CVAA)

Lab Sample ID: MB 660-158041/13-A — **Client Sample ID: Method Blank**
Matrix: Water — **Prep Type: Total/NA**
Analysis Batch: 158048 — **Prep Batch: 158041**

Analyte	MB Result	MB Qualifier	PQL	MDL	Unit	D	Prepared	Analyzed	Dil Fac
Mercury	0.072	U	0.20	0.072	ug/L		05/19/15 12:50	05/19/15 18:12	1

Lab Sample ID: LCS 660-158041/14-A — **Client Sample ID: Lab Control Sample**
Matrix: Water — **Prep Type: Total/NA**
Analysis Batch: 158048 — **Prep Batch: 158041**

Analyte	Spike Added	LCS Result	LCS Qualifier	Unit	D	%Rec	%Rec. Limits
Mercury	1.40	1.37		ug/L		98	80 - 120

Method: 7470A - Mercury (CVAA) (Continued)

Lab Sample ID: 660-66838-C-2-C MS — **Client Sample ID: Matrix Spike**
Matrix: Water — **Prep Type: Total/NA**
Analysis Batch: 158048 — **Prep Batch: 158041**

Analyte	Sample Result	Sample Qualifier	Spike Added	MS Result	MS Qualifier	Unit	D	%Rec	%Rec. Limits		
Mercury	0.072	U	1.40	1.36		ug/L		97	80 - 120		

Lab Sample ID: 660-66838-C-2-D MSD — **Client Sample ID: Matrix Spike Duplicate**
Matrix: Water — **Prep Type: Total/NA**
Analysis Batch: 158048 — **Prep Batch: 158041**

Analyte	Sample Result	Sample Qualifier	Spike Added	MSD Result	MSD Qualifier	Unit	D	%Rec	%Rec. Limits	RPD	RPD Limit
Mercury	0.072	U	1.40	1.35		ug/L		96	80 - 120	1	20

Method: 350.1 - Nitrogen, Ammonia

Lab Sample ID: MB 680-384034/28 — **Client Sample ID: Method Blank**
Matrix: Water — **Prep Type: Total/NA**
Analysis Batch: 384034

Analyte	MB Result	MB Qualifier	PQL	MDL	Unit	D	Prepared	Analyzed	Dil Fac
Ammonia as N	0.10	U	0.25	0.10	mg/L			05/20/15 12:28	1

Lab Sample ID: LCS 680-384034/35 — **Client Sample ID: Lab Control Sample**
Matrix: Water — **Prep Type: Total/NA**
Analysis Batch: 384034

Analyte			Spike Added	LCS Result	LCS Qualifier	Unit	D	%Rec	%Rec. Limits		
Ammonia as N			1.00	0.994		mg/L		99	90 - 110		

Lab Sample ID: 640-51195-F-4 MS — **Client Sample ID: Matrix Spike**
Matrix: Water — **Prep Type: Total/NA**
Analysis Batch: 384034

Analyte	Sample Result	Sample Qualifier	Spike Added	MS Result	MS Qualifier	Unit	D	%Rec	%Rec. Limits		
Ammonia as N	0.10	U	1.00	0.984		mg/L		98	90 - 110		

Lab Sample ID: 640-51195-F-4 MSD — **Client Sample ID: Matrix Spike Duplicate**
Matrix: Water — **Prep Type: Total/NA**
Analysis Batch: 384034

Analyte	Sample Result	Sample Qualifier	Spike Added	MSD Result	MSD Qualifier	Unit	D	%Rec	%Rec. Limits	RPD	RPD Limit
Ammonia as N	0.10	U	1.00	0.978		mg/L		98	90 - 110	1	30

Lab Sample ID: 680-112664-K-1 DU — **Client Sample ID: Duplicate**
Matrix: Water — **Prep Type: Total/NA**
Analysis Batch: 384034

Analyte	Sample Result	Sample Qualifier		DU Result	DU Qualifier	Unit	D			RPD	RPD Limit
Ammonia as N	0.33			0.324		mg/L				0.3	30

QC Sample Results

Client: Tetra Tech, Inc.
Project/Site: Lake Monroe

TestAmerica Job ID: 660-66927-1

Method: 351.2 - Nitrogen, Total Kjeldahl

Lab Sample ID: MB 680-383819/1-A — **Client Sample ID: Method Blank**
Matrix: Water — **Prep Type: Total/NA**
Analysis Batch: 383986 — **Prep Batch: 383819**

Analyte	MB Result	MB Qualifier	PQL	MDL	Unit	D	Prepared	Analyzed	Dil Fac
Nitrogen, Kjeldahl	0.10	U	0.20	0.10	mg/L		05/19/15 10:07	05/20/15 10:18	1

Lab Sample ID: LCS 680-383819/2-A — **Client Sample ID: Lab Control Sample**
Matrix: Water — **Prep Type: Total/NA**
Analysis Batch: 383986 — **Prep Batch: 383819**

Analyte	Spike Added	LCS Result	LCS Qualifier	Unit	D	%Rec	%Rec. Limits
Nitrogen, Kjeldahl	2.00	2.10		mg/L		105	75 - 125

Lab Sample ID: 660-66882-G-1-B MS — **Client Sample ID: Matrix Spike**
Matrix: Water — **Prep Type: Total/NA**
Analysis Batch: 383986 — **Prep Batch: 383819**

Analyte	Sample Result	Sample Qualifier	Spike Added	MS Result	MS Qualifier	Unit	D	%Rec	%Rec. Limits
Nitrogen, Kjeldahl	0.55		2.00	2.88		mg/L		116	75 - 125

Lab Sample ID: 660-66882-G-1-C MSD — **Client Sample ID: Matrix Spike Duplicate**
Matrix: Water — **Prep Type: Total/NA**
Analysis Batch: 383986 — **Prep Batch: 383819**

Analyte	Sample Result	Sample Qualifier	Spike Added	MSD Result	MSD Qualifier	Unit	D	%Rec	%Rec. Limits	RPD	RPD Limit
Nitrogen, Kjeldahl	0.55		2.00	2.56		mg/L		100	75 - 125	12	40

Lab Sample ID: 660-66882-G-2-B DU — **Client Sample ID: Duplicate**
Matrix: Water — **Prep Type: Total/NA**
Analysis Batch: 383986 — **Prep Batch: 383819**

Analyte	Sample Result	Sample Qualifier	DU Result	DU Qualifier	Unit	D	RPD	RPD Limit
Nitrogen, Kjeldahl	0.78		0.745		mg/L		4	40

Method: 353.2 - Nitrogen, Nitrate-Nitrite

Lab Sample ID: MB 680-383889/13 — **Client Sample ID: Method Blank**
Matrix: Water — **Prep Type: Total/NA**
Analysis Batch: 383889

Analyte	MB Result	MB Qualifier	PQL	MDL	Unit	D	Prepared	Analyzed	Dil Fac
Nitrate Nitrite as N	0.010	U	0.050	0.010	mg/L			05/19/15 15:42	1

Lab Sample ID: LCS 680-383889/15 — **Client Sample ID: Lab Control Sample**
Matrix: Water — **Prep Type: Total/NA**
Analysis Batch: 383889

Analyte	Spike Added	LCS Result	LCS Qualifier	Unit	D	%Rec	%Rec. Limits
Nitrate Nitrite as N	1.00	1.05		mg/L		105	90 - 110

Method: 353.2 - Nitrogen, Nitrate-Nitrite (Continued)

Lab Sample ID: 680-112594-A-3 MS — **Client Sample ID: Matrix Spike**
Matrix: Water — **Prep Type: Total/NA**
Analysis Batch: 383889

Analyte	Sample Result	Sample Qualifier	Spike Added	MS Result	MS Qualifier	Unit	D	%Rec	%Rec. Limits		
Nitrate Nitrite as N	0.065		1.00	1.06		mg/L		99	90 - 110		

Lab Sample ID: 660-66927-1 DU — **Client Sample ID: Wheeling PS Stormwater**
Matrix: Water — **Prep Type: Total/NA**
Analysis Batch: 383889

Analyte	Sample Result	Sample Qualifier		DU Result	DU Qualifier	Unit	D			RPD	RPD Limit
Nitrate Nitrite as N	2.0			1.99		mg/L				0.9	10

Method: 365.4 - Phosphorus, Total

Lab Sample ID: MB 680-383819/1-A — **Client Sample ID: Method Blank**
Matrix: Water — **Prep Type: Total/NA**
Analysis Batch: 383985 — **Prep Batch: 383819**

Analyte	MB Result	MB Qualifier	PQL	MDL	Unit	D	Prepared	Analyzed	Dil Fac
Phosphorus, Total	0.041	U	0.10	0.041	mg/L		05/19/15 10:07	05/20/15 10:18	1

Lab Sample ID: LCS 680-383819/2-A — **Client Sample ID: Lab Control Sample**
Matrix: Water — **Prep Type: Total/NA**
Analysis Batch: 383985 — **Prep Batch: 383819**

Analyte			Spike Added	LCS Result	LCS Qualifier	Unit	D	%Rec	%Rec. Limits		
Phosphorus, Total			2.00	1.97		mg/L		99	60 - 140		

Lab Sample ID: 660-66882-G-1-B MS — **Client Sample ID: Matrix Spike**
Matrix: Water — **Prep Type: Total/NA**
Analysis Batch: 383985 — **Prep Batch: 383819**

Analyte	Sample Result	Sample Qualifier	Spike Added	MS Result	MS Qualifier	Unit	D	%Rec	%Rec. Limits		
Phosphorus, Total	2.5		2.00	4.67		mg/L		110	60 - 140		

Lab Sample ID: 660-66882-G-1-C MSD — **Client Sample ID: Matrix Spike Duplicate**
Matrix: Water — **Prep Type: Total/NA**
Analysis Batch: 383985 — **Prep Batch: 383819**

Analyte	Sample Result	Sample Qualifier	Spike Added	MSD Result	MSD Qualifier	Unit	D	%Rec	%Rec. Limits	RPD	RPD Limit
Phosphorus, Total	2.5		2.00	4.47		mg/L		100	60 - 140	4	40

Lab Sample ID: 660-66882-G-2-B DU — **Client Sample ID: Duplicate**
Matrix: Water — **Prep Type: Total/NA**
Analysis Batch: 383985 — **Prep Batch: 383819**

Analyte	Sample Result	Sample Qualifier		DU Result	DU Qualifier	Unit	D			RPD	RPD Limit
Phosphorus, Total	0.12			0.122		mg/L				2	40

Method: 4500 S2 F-2011 - Sulfide, Total

Lab Sample ID: MB 680-383940/1 — **Client Sample ID: Method Blank**
Matrix: Water — **Prep Type: Total/NA**
Analysis Batch: 383940

Analyte	MB Result	MB Qualifier	PQL	MDL	Unit	D	Prepared	Analyzed	Dil Fac
Total Sulfide	1.0	U	1.0	1.0	mg/L			05/20/15 09:18	1

Lab Sample ID: LCS 680-383940/2 — **Client Sample ID: Lab Control Sample**
Matrix: Water — **Prep Type: Total/NA**
Analysis Batch: 383940

Analyte	Spike Added	LCS Result	LCS Qualifier	Unit	D	%Rec	%Rec. Limits
Total Sulfide	10.0	11.4		mg/L		114	75 - 125

Lab Sample ID: LCSD 680-383940/3 — **Client Sample ID: Lab Control Sample Dup**
Matrix: Water — **Prep Type: Total/NA**
Analysis Batch: 383940

Analyte	Spike Added	LCSD Result	LCSD Qualifier	Unit	D	%Rec	%Rec. Limits	RPD	RPD Limit
Total Sulfide	10.0	11.3		mg/L		113	75 - 125	1	30

Lab Sample ID: 680-112619-F-4 DU — **Client Sample ID: Duplicate**
Matrix: Water — **Prep Type: Total/NA**
Analysis Batch: 383940

Analyte	Sample Result	Sample Qualifier	DU Result	DU Qualifier	Unit	D	RPD	RPD Limit
Total Sulfide	1.0	U	1.0	U	mg/L		NC	30

Method: SM 2120B - Color, Colorimetric

Lab Sample ID: MB 660-158060/4 — **Client Sample ID: Method Blank**
Matrix: Water — **Prep Type: Total/NA**
Analysis Batch: 158060

Analyte	MB Result	MB Qualifier	PQL	MDL	Unit	D	Prepared	Analyzed	Dil Fac
Color	5.0	U	5.0	5.0	PCU			05/16/15 13:20	1
pH at time of analysis	6.62		1.0	1.0	SU			05/16/15 13:20	1

Lab Sample ID: LCS 660-158060/5 — **Client Sample ID: Lab Control Sample**
Matrix: Water — **Prep Type: Total/NA**
Analysis Batch: 158060

Analyte	Spike Added	LCS Result	LCS Qualifier	Unit	D	%Rec	%Rec. Limits
Color	30.0	30.0		PCU		100	90 - 110

Lab Sample ID: 660-66927-1 DU — **Client Sample ID: Wheeling PS Stormwater**
Matrix: Water — **Prep Type: Total/NA**
Analysis Batch: 158060

Analyte	Sample Result	Sample Qualifier	DU Result	DU Qualifier	Unit	D	RPD	RPD Limit
Color	35		35.0		PCU		0	20
pH at time of analysis	7.1		7.16		SU		0.3	

Method: SM 2130B - Turbidity

Lab Sample ID: MB 660-158035/2 — **Client Sample ID: Method Blank**
Matrix: Water — **Prep Type: Total/NA**
Analysis Batch: 158035

Analyte	MB Result	MB Qualifier	PQL	MDL	Unit	D	Prepared	Analyzed	Dil Fac
Turbidity	0.50	U	0.50	0.50	NTU			05/16/15 14:00	1

Lab Sample ID: LCS 660-158035/3 — **Client Sample ID: Lab Control Sample**
Matrix: Water — **Prep Type: Total/NA**
Analysis Batch: 158035

Analyte	Spike Added	LCS Result	LCS Qualifier	Unit	D	%Rec	%Rec. Limits
Turbidity	40.0	39.7		NTU		99	90 - 110

Lab Sample ID: 660-66927-1 DU — **Client Sample ID: Wheeling PS Stormwater**
Matrix: Water — **Prep Type: Total/NA**
Analysis Batch: 158035

Analyte	Sample Result	Sample Qualifier	DU Result	DU Qualifier	Unit	D	RPD	RPD Limit
Turbidity	0.77		0.775		NTU		0.3	20

Method: SM 2320B - Alkalinity

Lab Sample ID: MB 660-158065/1 — **Client Sample ID: Method Blank**
Matrix: Water — **Prep Type: Total/NA**
Analysis Batch: 158065

Analyte	MB Result	MB Qualifier	PQL	MDL	Unit	D	Prepared	Analyzed	Dil Fac
Alkalinity as CaCO3	1.0	U	1.0	1.0	mg/L			05/20/15 05:50	1

Lab Sample ID: LCS 660-158065/3 — **Client Sample ID: Lab Control Sample**
Matrix: Water — **Prep Type: Total/NA**
Analysis Batch: 158065

Analyte	Spike Added	LCS Result	LCS Qualifier	Unit	D	%Rec	%Rec. Limits
Alkalinity as CaCO3	118	124		mg/L		105	90 - 110

Lab Sample ID: 660-66927-1 DU — **Client Sample ID: Wheeling PS Stormwater**
Matrix: Water — **Prep Type: Total/NA**
Analysis Batch: 158065

Analyte	Sample Result	Sample Qualifier	DU Result	DU Qualifier	Unit	D	RPD	RPD Limit
Alkalinity as CaCO3	42		42.4		mg/L		1	30

Method: SM 2540C - Solids, Total Dissolved (TDS)

Lab Sample ID: MB 660-158015/1 — **Client Sample ID: Method Blank**
Matrix: Water — **Prep Type: Total/NA**
Analysis Batch: 158015

Analyte	MB Result	MB Qualifier	PQL	MDL	Unit	D	Prepared	Analyzed	Dil Fac
Total Dissolved Solids	5.0	U	5.0	5.0	mg/L			05/18/15 12:54	1

Method: SM 2540C - Solids, Total Dissolved (TDS) (Continued)

Lab Sample ID: LCS 660-158015/2 — **Client Sample ID: Lab Control Sample**
Matrix: Water — **Prep Type: Total/NA**
Analysis Batch: 158015

Analyte			Spike Added	LCS Result	LCS Qualifier	Unit	D	%Rec	%Rec. Limits		
Total Dissolved Solids			10000	9470		mg/L		95	80 - 120		

Lab Sample ID: 660-66892-B-2 DU — **Client Sample ID: Duplicate**
Matrix: Water — **Prep Type: Total/NA**
Analysis Batch: 158015

Analyte	Sample Result	Sample Qualifier		DU Result	DU Qualifier	Unit	D			RPD	RPD Limit
Total Dissolved Solids	590			562		mg/L				5	20

Method: SM 2540D - Solids, Total Suspended (TSS)

Lab Sample ID: MB 660-157990/1 — **Client Sample ID: Method Blank**
Matrix: Water — **Prep Type: Total/NA**
Analysis Batch: 157990

Analyte	MB Result	MB Qualifier	PQL	MDL	Unit	D	Prepared	Analyzed	Dil Fac
Total Suspended Solids	5.0	U	5.0	5.0	mg/L			05/17/15 15:16	1

Lab Sample ID: LCS 660-157990/2 — **Client Sample ID: Lab Control Sample**
Matrix: Water — **Prep Type: Total/NA**
Analysis Batch: 157990

Analyte			Spike Added	LCS Result	LCS Qualifier	Unit	D	%Rec	%Rec. Limits		
Total Suspended Solids			100	101		mg/L		101	80 - 120		

Lab Sample ID: 660-66899-B-1 DU — **Client Sample ID: Duplicate**
Matrix: Water — **Prep Type: Total/NA**
Analysis Batch: 157990

Analyte	Sample Result	Sample Qualifier		DU Result	DU Qualifier	Unit	D			RPD	RPD Limit
Total Suspended Solids	850			871		mg/L				2	20

Method: SM 4500 H+ B - pH

Lab Sample ID: LCS 660-158014/1 — **Client Sample ID: Lab Control Sample**
Matrix: Water — **Prep Type: Total/NA**
Analysis Batch: 158014

Analyte			Spike Added	LCS Result	LCS Qualifier	Unit	D	%Rec	%Rec. Limits		
pH			6.00	6.010		SU		100	98 - 102		

Lab Sample ID: 660-66872-A-1 DU — **Client Sample ID: Duplicate**
Matrix: Water — **Prep Type: Total/NA**
Analysis Batch: 158014

Analyte	Sample Result	Sample Qualifier		DU Result	DU Qualifier	Unit	D			RPD	RPD Limit
pH	10.7			10.68		SU				0.09	20
Temperature	21.9			21.90		Degrees C				0	

Method: SM 4500 P E - Orthophosphate

Lab Sample ID: MB 660-158034/4 — **Client Sample ID: Method Blank**
Matrix: Water — **Prep Type: Total/NA**
Analysis Batch: 158034

Analyte	MB Result	MB Qualifier	PQL	MDL	Unit	D	Prepared	Analyzed	Dil Fac
Orthophosphate	0.0050	U	0.010	0.0050	mg/L			05/16/15 10:00	1

Lab Sample ID: LCS 660-158034/5 — **Client Sample ID: Lab Control Sample**
Matrix: Water — **Prep Type: Total/NA**
Analysis Batch: 158034

Analyte	Spike Added	LCS Result	LCS Qualifier	Unit	D	%Rec	%Rec. Limits
Orthophosphate	0.300	0.318		mg/L		106	90 - 110

Lab Sample ID: 660-66920-D-3 MS — **Client Sample ID: Matrix Spike**
Matrix: Water — **Prep Type: Dissolved**
Analysis Batch: 158034

Analyte	Sample Result	Sample Qualifier	Spike Added	MS Result	MS Qualifier	Unit	D	%Rec	%Rec. Limits
Orthophosphate	0.083		0.300	0.387		mg/L		101	90 - 110

Lab Sample ID: 660-66920-D-3 MSD — **Client Sample ID: Matrix Spike Duplicate**
Matrix: Water — **Prep Type: Dissolved**
Analysis Batch: 158034

Analyte	Sample Result	Sample Qualifier	Spike Added	MSD Result	MSD Qualifier	Unit	D	%Rec	%Rec. Limits	RPD	RPD Limit
Orthophosphate	0.083		0.300	0.372		mg/L		96	90 - 110	4	30

Method: SM 5310B - Organic Carbon, Total (TOC)

Lab Sample ID: MB 400-258178/4 — **Client Sample ID: Method Blank**
Matrix: Water — **Prep Type: Total/NA**
Analysis Batch: 258178

Analyte	MB Result	MB Qualifier	PQL	MDL	Unit	D	Prepared	Analyzed	Dil Fac
Total Organic Carbon	0.50	U	1.0	0.50	mg/L			05/21/15 20:10	1

Lab Sample ID: LCS 400-258178/5 — **Client Sample ID: Lab Control Sample**
Matrix: Water — **Prep Type: Total/NA**
Analysis Batch: 258178

Analyte	Spike Added	LCS Result	LCS Qualifier	Unit	D	%Rec	%Rec. Limits
Total Organic Carbon	10.0	10.8		mg/L		108	80 - 120

Lab Sample ID: MRL 400-258178/2 — **Client Sample ID: Lab Control Sample**
Matrix: Water — **Prep Type: Total/NA**
Analysis Batch: 258178

Analyte	Spike Added	MRL Result	MRL Qualifier	Unit	D	%Rec	%Rec. Limits
Total Organic Carbon	1.00	1.21		mg/L		121	50 - 150

Method: SM 5310B - Organic Carbon, Total (TOC) (Continued)

Lab Sample ID: 660-66927-1 MS
Matrix: Water
Analysis Batch: 258178

Client Sample ID: Wheeling PS Stormwater
Prep Type: Total/NA

Analyte	Sample Result	Sample Qualifier	Spike Added	MS Result	MS Qualifier	Unit	D	%Rec	%Rec. Limits		
Total Organic Carbon	10		10.0	20.9		mg/L		109	76 - 117		

Lab Sample ID: 660-66927-1 MSD
Matrix: Water
Analysis Batch: 258178

Client Sample ID: Wheeling PS Stormwater
Prep Type: Total/NA

Analyte	Sample Result	Sample Qualifier	Spike Added	MSD Result	MSD Qualifier	Unit	D	%Rec	%Rec. Limits	RPD	RPD Limit
Total Organic Carbon	10		10.0	20.9		mg/L		109	76 - 117	0	16

QC Association Summary

Client: Tetra Tech, Inc.
Project/Site: Lake Monroe

TestAmerica Job ID: 660-66927-1

HPLC/IC

Analysis Batch: 384103

Lab Sample ID	Client Sample ID	Prep Type	Matrix	Method	Prep Batch
660-66927-1	Wheeling PS Stormwater	Total/NA	Water	300.0	
660-66927-1	Wheeling PS Stormwater	Total/NA	Water	300.0	
660-66927-1 MS	Wheeling PS Stormwater	Total/NA	Water	300.0	
660-66927-1 MSD	Wheeling PS Stormwater	Total/NA	Water	300.0	
LCS 680-384103/60	Lab Control Sample	Total/NA	Water	300.0	
LCSD 680-384103/61	Lab Control Sample Dup	Total/NA	Water	300.0	
MB 680-384103/59	Method Blank	Total/NA	Water	300.0	

Metals

Prep Batch: 158022

Lab Sample ID	Client Sample ID	Prep Type	Matrix	Method	Prep Batch
660-66927-1	Wheeling PS Stormwater	Total Recoverable	Water	3005A	
660-66927-1 MS	Wheeling PS Stormwater	Total Recoverable	Water	3005A	
660-66927-1 MSD	Wheeling PS Stormwater	Total Recoverable	Water	3005A	
LCS 660-158022/2-A	Lab Control Sample	Total Recoverable	Water	3005A	
MB 660-158022/1-A	Method Blank	Total Recoverable	Water	3005A	

Analysis Batch: 158023

Lab Sample ID	Client Sample ID	Prep Type	Matrix	Method	Prep Batch
660-66927-1	Wheeling PS Stormwater	Total Recoverable	Water	6010B	158022
660-66927-1 MS	Wheeling PS Stormwater	Total Recoverable	Water	6010B	158022
660-66927-1 MSD	Wheeling PS Stormwater	Total Recoverable	Water	6010B	158022
LCS 660-158022/2-A	Lab Control Sample	Total Recoverable	Water	6010B	158022
MB 660-158022/1-A	Method Blank	Total Recoverable	Water	6010B	158022

Prep Batch: 158041

Lab Sample ID	Client Sample ID	Prep Type	Matrix	Method	Prep Batch
660-66838-C-2-C MS	Matrix Spike	Total/NA	Water	7470A	
660-66838-C-2-D MSD	Matrix Spike Duplicate	Total/NA	Water	7470A	
660-66927-1	Wheeling PS Stormwater	Total/NA	Water	7470A	
LCS 660-158041/14-A	Lab Control Sample	Total/NA	Water	7470A	
MB 660-158041/13-A	Method Blank	Total/NA	Water	7470A	

Analysis Batch: 158048

Lab Sample ID	Client Sample ID	Prep Type	Matrix	Method	Prep Batch
660-66838-C-2-C MS	Matrix Spike	Total/NA	Water	7470A	158041
660-66838-C-2-D MSD	Matrix Spike Duplicate	Total/NA	Water	7470A	158041
660-66927-1	Wheeling PS Stormwater	Total/NA	Water	7470A	158041
LCS 660-158041/14-A	Lab Control Sample	Total/NA	Water	7470A	158041
MB 660-158041/13-A	Method Blank	Total/NA	Water	7470A	158041

General Chemistry

Analysis Batch: 157990

Lab Sample ID	Client Sample ID	Prep Type	Matrix	Method	Prep Batch
660-66899-B-1 DU	Duplicate	Total/NA	Water	SM 2540D	
660-66927-1	Wheeling PS Stormwater	Total/NA	Water	SM 2540D	
LCS 660-157990/2	Lab Control Sample	Total/NA	Water	SM 2540D	
MB 660-157990/1	Method Blank	Total/NA	Water	SM 2540D	

General Chemistry (Continued)

Analysis Batch: 158014

Lab Sample ID	Client Sample ID	Prep Type	Matrix	Method	Prep Batch
660-66872-A-1 DU	Duplicate	Total/NA	Water	SM 4500 H+ B	
660-66927-1	Wheeling PS Stormwater	Total/NA	Water	SM 4500 H+ B	
LCS 660-158014/1	Lab Control Sample	Total/NA	Water	SM 4500 H+ B	

Analysis Batch: 158015

Lab Sample ID	Client Sample ID	Prep Type	Matrix	Method	Prep Batch
660-66892-B-2 DU	Duplicate	Total/NA	Water	SM 2540C	
660-66927-1	Wheeling PS Stormwater	Total/NA	Water	SM 2540C	
LCS 660-158015/2	Lab Control Sample	Total/NA	Water	SM 2540C	
MB 660-158015/1	Method Blank	Total/NA	Water	SM 2540C	

Analysis Batch: 158034

Lab Sample ID	Client Sample ID	Prep Type	Matrix	Method	Prep Batch
660-66920-D-3 MS	Matrix Spike	Dissolved	Water	SM 4500 P E	
660-66920-D-3 MSD	Matrix Spike Duplicate	Dissolved	Water	SM 4500 P E	
660-66927-1	Wheeling PS Stormwater	Dissolved	Water	SM 4500 P E	
LCS 660-158034/5	Lab Control Sample	Total/NA	Water	SM 4500 P E	
MB 660-158034/4	Method Blank	Total/NA	Water	SM 4500 P E	

Analysis Batch: 158035

Lab Sample ID	Client Sample ID	Prep Type	Matrix	Method	Prep Batch
660-66927-1	Wheeling PS Stormwater	Total/NA	Water	SM 2130B	
660-66927-1 DU	Wheeling PS Stormwater	Total/NA	Water	SM 2130B	
LCS 660-158035/3	Lab Control Sample	Total/NA	Water	SM 2130B	
MB 660-158035/2	Method Blank	Total/NA	Water	SM 2130B	

Analysis Batch: 158060

Lab Sample ID	Client Sample ID	Prep Type	Matrix	Method	Prep Batch
660-66927-1	Wheeling PS Stormwater	Total/NA	Water	SM 2120B	
660-66927-1 DU	Wheeling PS Stormwater	Total/NA	Water	SM 2120B	
LCS 660-158060/5	Lab Control Sample	Total/NA	Water	SM 2120B	
MB 660-158060/4	Method Blank	Total/NA	Water	SM 2120B	

Analysis Batch: 158065

Lab Sample ID	Client Sample ID	Prep Type	Matrix	Method	Prep Batch
660-66927-1	Wheeling PS Stormwater	Total/NA	Water	SM 2320B	
660-66927-1 DU	Wheeling PS Stormwater	Total/NA	Water	SM 2320B	
LCS 660-158065/3	Lab Control Sample	Total/NA	Water	SM 2320B	
MB 660-158065/1	Method Blank	Total/NA	Water	SM 2320B	

Analysis Batch: 258178

Lab Sample ID	Client Sample ID	Prep Type	Matrix	Method	Prep Batch
660-66927-1	Wheeling PS Stormwater	Total/NA	Water	SM 5310B	
660-66927-1 MS	Wheeling PS Stormwater	Total/NA	Water	SM 5310B	
660-66927-1 MSD	Wheeling PS Stormwater	Total/NA	Water	SM 5310B	
LCS 400-258178/5	Lab Control Sample	Total/NA	Water	SM 5310B	
MB 400-258178/4	Method Blank	Total/NA	Water	SM 5310B	
MRL 400-258178/2	Lab Control Sample	Total/NA	Water	SM 5310B	

General Chemistry (Continued)

Prep Batch: 383819

Lab Sample ID	Client Sample ID	Prep Type	Matrix	Method	Prep Batch
660-66882-G-1-B MS	Matrix Spike	Total/NA	Water	Digestion	
660-66882-G-1-C MSD	Matrix Spike Duplicate	Total/NA	Water	Digestion	
660-66882-G-2-B DU	Duplicate	Total/NA	Water	Digestion	
660-66927-1	Wheeling PS Stormwater	Total/NA	Water	Digestion	
LCS 680-383819/2-A	Lab Control Sample	Total/NA	Water	Digestion	
MB 680-383819/1-A	Method Blank	Total/NA	Water	Digestion	

Analysis Batch: 383889

Lab Sample ID	Client Sample ID	Prep Type	Matrix	Method	Prep Batch
660-66927-1	Wheeling PS Stormwater	Total/NA	Water	353.2	
660-66927-1 DU	Wheeling PS Stormwater	Total/NA	Water	353.2	
680-112594-A-3 MS	Matrix Spike	Total/NA	Water	353.2	
680-112594-A-3 MSD	Matrix Spike Duplicate	Total/NA	Water	353.2	
LCS 680-383889/15	Lab Control Sample	Total/NA	Water	353.2	
MB 680-383889/13	Method Blank	Total/NA	Water	353.2	

Analysis Batch: 383940

Lab Sample ID	Client Sample ID	Prep Type	Matrix	Method	Prep Batch
660-66927-1	Wheeling PS Stormwater	Total/NA	Water	4500 S2 F-2011	
680-112619-F-4 DU	Duplicate	Total/NA	Water	4500 S2 F-2011	
LCS 680-383940/2	Lab Control Sample	Total/NA	Water	4500 S2 F-2011	
LCSD 680-383940/3	Lab Control Sample Dup	Total/NA	Water	4500 S2 F-2011	
MB 680-383940/1	Method Blank	Total/NA	Water	4500 S2 F-2011	

Analysis Batch: 383985

Lab Sample ID	Client Sample ID	Prep Type	Matrix	Method	Prep Batch
660-66882-G-1-B MS	Matrix Spike	Total/NA	Water	365.4	383819
660-66882-G-1-C MSD	Matrix Spike Duplicate	Total/NA	Water	365.4	383819
660-66882-G-2-B DU	Duplicate	Total/NA	Water	365.4	383819
660-66927-1	Wheeling PS Stormwater	Total/NA	Water	365.4	383819
LCS 680-383819/2-A	Lab Control Sample	Total/NA	Water	365.4	383819
MB 680-383819/1-A	Method Blank	Total/NA	Water	365.4	383819

Analysis Batch: 383986

Lab Sample ID	Client Sample ID	Prep Type	Matrix	Method	Prep Batch
660-66882-G-1-B MS	Matrix Spike	Total/NA	Water	351.2	383819
660-66882-G-1-C MSD	Matrix Spike Duplicate	Total/NA	Water	351.2	383819
660-66882-G-2-B DU	Duplicate	Total/NA	Water	351.2	383819
660-66927-1	Wheeling PS Stormwater	Total/NA	Water	351.2	383819
LCS 680-383819/2-A	Lab Control Sample	Total/NA	Water	351.2	383819
MB 680-383819/1-A	Method Blank	Total/NA	Water	351.2	383819

Analysis Batch: 383998

Lab Sample ID	Client Sample ID	Prep Type	Matrix	Method	Prep Batch
660-66927-1	Wheeling PS Stormwater	Total/NA	Water	Total Nitrogen	

Analysis Batch: 384034

Lab Sample ID	Client Sample ID	Prep Type	Matrix	Method	Prep Batch
640-51195-F-4 MS	Matrix Spike	Total/NA	Water	350.1	
640-51195-F-4 MSD	Matrix Spike Duplicate	Total/NA	Water	350.1	
660-66927-1	Wheeling PS Stormwater	Total/NA	Water	350.1	

QC Association Summary

Client: Tetra Tech, Inc.
Project/Site: Lake Monroe

TestAmerica Job ID: 660-66927-1

General Chemistry (Continued)

Analysis Batch: 384034 (Continued)

Lab Sample ID	Client Sample ID	Prep Type	Matrix	Method	Prep Batch
680-112664-K-1 DU	Duplicate	Total/NA	Water	350.1	
LCS 680-384034/35	Lab Control Sample	Total/NA	Water	350.1	
MB 680-384034/28	Method Blank	Total/NA	Water	350.1	

Lab Chronicle

Client: Tetra Tech, Inc.
Project/Site: Lake Monroe

TestAmerica Job ID: 660-66927-1

Client Sample ID: Wheeling PS Stormwater

Lab Sample ID: 660-66927-1

Date Collected: 05/15/15 09:35

Matrix: Water

Date Received: 05/16/15 12:35

Prep Type	Batch Type	Batch Method	Run	Dilution Factor	Batch Number	Prepared or Analyzed	Analyst	Lab
Total/NA	Analysis	300.0		2	384103	05/21/15 03:22	DAS	TAL SAV
Total/NA	Analysis	300.0		1	384103	05/21/15 04:06	DAS	TAL SAV
Total Recoverable	Prep	3005A			158022	05/19/15 07:25	GAF	TAL TAM
Total Recoverable	Analysis	6010B		1	158023	05/19/15 11:13	GAF	TAL TAM
Total/NA	Prep	7470A			158041	05/19/15 12:50	GH1	TAL TAM
Total/NA	Analysis	7470A		1	158048	05/19/15 18:24	GH1	TAL TAM
Total/NA	Analysis	350.1		1	384034	05/20/15 12:23	JME	TAL SAV
Total/NA	Prep	Digestion			383819	05/19/15 11:59	JRJ	TAL SAV
Total/NA	Analysis	351.2		1	383986	05/20/15 10:39	JER	TAL SAV
Total/NA	Analysis	353.2		10	383889	05/19/15 15:58	GRX	TAL SAV
Total/NA	Prep	Digestion			383819	05/19/15 11:59	JRJ	TAL SAV
Total/NA	Analysis	365.4		1	383985	05/20/15 10:39	JER	TAL SAV
Total/NA	Analysis	4500 S2 F-2011		1	383940	05/20/15 09:18	JRJ	TAL SAV
Total/NA	Analysis	SM 2120B		1	158060	05/16/15 13:20	ELE	TAL TAM
Total/NA	Analysis	SM 2130B		1	158035	05/16/15 14:00	ELE	TAL TAM
Total/NA	Analysis	SM 2320B		1	158065	05/20/15 05:50	AJG	TAL TAM
Total/NA	Analysis	SM 2540C		1	158015	05/18/15 12:54	SC1	TAL TAM
Total/NA	Analysis	SM 2540D		1	157990	05/17/15 15:16	SC1	TAL TAM
Total/NA	Analysis	SM 4500 H+ B		1	158014	05/18/15 12:20	AJG	TAL TAM
Dissolved	Analysis	SM 4500 P E		1	158034	05/16/15 13:30	ELE	TAL TAM
Total/NA	Analysis	SM 5310B		1	258178	05/21/15 22:09	NAB	TAL PEN
Total/NA	Analysis	Total Nitrogen		1	383998	05/20/15 13:02	JER	TAL SAV

Laboratory References:

ENCO = ENCO-Orlando, 10775 Central Port Drive, Orlando, FL 32824, TEL (407)826-5314
TAL PEN = TestAmerica Pensacola, 3355 McLemore Drive, Pensacola, FL 32514, TEL (850)474-1001
TAL SAV = TestAmerica Savannah, 5102 LaRoche Avenue, Savannah, GA 31404, TEL (912)354-7858
TAL TAM = TestAmerica Tampa, 6712 Benjamin Road, Suite 100, Tampa, FL 33634, TEL (813)885-7427

Method Summary

Client: Tetra Tech, Inc.
Project/Site: Lake Monroe

TestAmerica Job ID: 660-66927-1

Method	Method Description	Protocol	Laboratory
300.0	Anions, Ion Chromatography	MCAWW	TAL SAV
6010B	Metals (ICP)	SW846	TAL TAM
7470A	Mercury (CVAA)	SW846	TAL TAM
350.1	Nitrogen, Ammonia	MCAWW	TAL SAV
351.2	Nitrogen, Total Kjeldahl	MCAWW	TAL SAV
353.2	Nitrogen, Nitrate-Nitrite	MCAWW	TAL SAV
365.4	Phosphorus, Total	EPA	TAL SAV
4500 S2 F-2011	Sulfide, Total	SM	TAL SAV
SM 2120B	Color, Colorimetric	SM	TAL TAM
SM 2130B	Turbidity	SM	TAL TAM
SM 2320B	Alkalinity	SM	TAL TAM
SM 2540C	Solids, Total Dissolved (TDS)	SM	TAL TAM
SM 2540D	Solids, Total Suspended (TSS)	SM	TAL TAM
SM 4500 H+ B	pH	SM	TAL TAM
SM 4500 P E	Orthophosphate	SM	TAL TAM
SM 5310B	Organic Carbon, Total (TOC)	SM	TAL PEN
Total Nitrogen	Nitrogen, Total	EPA	TAL SAV
Chlorophyll A ug/L	Chlorophyll A	NONE	ENCO
Fecal Coliform	SM 9222D Fecal Coliform by MF	NONE	ENCO

Protocol References:

EPA = US Environmental Protection Agency
MCAWW = "Methods For Chemical Analysis Of Water And Wastes", EPA-600/4-79-020, March 1983 And Subsequent Revisions.
NONE = NONE
SM = "Standard Methods For The Examination Of Water And Wastewater",
SW846 = "Test Methods For Evaluating Solid Waste, Physical/Chemical Methods", Third Edition, November 1986 And Its Updates.

Laboratory References:

ENCO = ENCO-Orlando, 10775 Central Port Drive, Orlando, FL 32824, TEL (407)826-5314
TAL PEN = TestAmerica Pensacola, 3355 McLemore Drive, Pensacola, FL 32514, TEL (850)474-1001
TAL SAV = TestAmerica Savannah, 5102 LaRoche Avenue, Savannah, GA 31404, TEL (912)354-7858
TAL TAM = TestAmerica Tampa, 6712 Benjamin Road, Suite 100, Tampa, FL 33634, TEL (813)885-7427

Certification Summary

Client: Tetra Tech, Inc.
Project/Site: Lake Monroe

TestAmerica Job ID: 660-66927-1

Laboratory: TestAmerica Tampa

Unless otherwise noted, all analytes for this laboratory were covered under each certification below.

Authority	Program	EPA Region	Certification ID	Expiration Date
Florida	NELAP	4	E84282	06-30-15 *

The following analytes are included in this report, but are not certified under this certification:

Analysis Method	Prep Method	Matrix	Analyte
SM 2120B		Water	pH at time of analysis
SM 4500 H+ B		Water	Temperature

Laboratory: TestAmerica Pensacola

All certifications held by this laboratory are listed. Not all certifications are applicable to this report.

Authority	Program	EPA Region	Certification ID	Expiration Date
Alabama	State Program	4	40150	06-30-15
Arizona	State Program	9	AZ0710	01-11-16
Arkansas DEQ	State Program	6	88-0689	09-01-15
Florida	NELAP	4	E81010	06-30-15
Georgia	State Program	4	N/A	06-30-15
Illinois	NELAP	5	200041	10-09-15
Iowa	State Program	7	367	07-31-16
Kansas	NELAP	7	E-10253	05-31-15 *
Kentucky (UST)	State Program	4	53	06-30-15
Kentucky (WW)	State Program	4	98030	12-31-15
Louisiana	NELAP	6	30976	06-30-15
Maryland	State Program	3	233	09-30-15
Massachusetts	State Program	1	M-FL094	06-30-15
Michigan	State Program	5	9912	06-30-15
New Jersey	NELAP	2	FL006	06-30-15
North Carolina (WW/SW)	State Program	4	314	12-31-15
Oklahoma	State Program	6	9810	08-31-15
Pennsylvania	NELAP	3	68-00467	01-31-16
Rhode Island	State Program	1	LAO00307	12-30-15
South Carolina	State Program	4	96026	06-30-15
Tennessee	State Program	4	TN02907	06-30-15
Texas	NELAP	6	T104704286-12-5	09-30-15
USDA	Federal		P330-13-00193	07-01-16
Virginia	NELAP	3	460166	06-14-15
West Virginia DEP	State Program	3	136	06-30-15

Laboratory: TestAmerica Savannah

Unless otherwise noted, all analytes for this laboratory were covered under each certification below.

Authority	Program	EPA Region	Certification ID	Expiration Date
Florida	NELAP	4	E87052	06-30-15

The following analytes are included in this report, but certification is not offered by the governing authority:

Analysis Method	Prep Method	Matrix	Analyte
Total Nitrogen		Water	Nitrogen, Total

* Certification renewal pending - certification considered valid.

ENCO Laboratories

Accurate. Timely. Responsive. Innovative.

10775 Central Port Drive
Orlando FL, 32824
Phone: 407.826.5314 FAX: 407.850.6945

Friday, May 22, 2015
Test America - Tampa (TE022)
Attn: Nancy Robertson
6712 Benjamin Road, Suite 100
Tampa, FL 33634

RE: Laboratory Results for
Project Number: 66008532, Project Name/Desc: Test America -
ENCO Workorder(s): A503049

Dear Nancy Robertson,

Enclosed is a copy of your laboratory report for test samples received by our laboratory on Friday, May 15, 2015.

Unless otherwise noted in an attached project narrative, all samples were received in acceptable condition and processed in accordance with the referenced methods/procedures. Results for these procedures apply only to the samples as submitted.

The analytical results contained in this report are in compliance with NELAC standards, except as noted in the project narrative. This report shall not be reproduced except in full, without the written approval of the Laboratory.

This report contains only those analyses performed by Environmental Conservation Laboratories. Unless otherwise noted, all analyses were performed at ENCO Orlando. Data from outside organizations will be reported under separate cover.

If you have any questions or require further information, please do not hesitate to contact me.

Sincerely,

Ronald Wambles For David Camacho

Project Manager

Enclosure(s)

SAMPLE SUMMARY/LABORATORY CHRONICLE

Client ID: Wheelings PS **Lab ID: A503049-01** **Sampled: 05/15/15 09:35** **Received: 05/15/15 11:55**

Parameter	Hold Date/Time(s)				Prep Date/Time(s)		Analysis Date/Time(s)	
SM 10200H-2001	05/17/15	09:35	05/29/15		05/15/15	12:07	05/20/15	11:07
SM 9222D-1997	05/15/15	15:35	05/16/15	12:33	05/15/15	12:33	05/16/15	12:00

Client ID: Wheelings PS (set 2) **Lab ID: A503049-02** **Sampled: 05/15/15 09:35** **Received: 05/15/15 11:55**

Parameter	Hold Date/Time(s)				Prep Date/Time(s)		Analysis Date/Time(s)	
SM 9222D-1997	05/15/15	15:35	05/16/15	12:33	05/15/15	12:33	05/16/15	12:00

This report relates only to the sample as received by the laboratory, and may only be reproduced in full.

SAMPLE DETECTION SUMMARY

Client ID: Wheelings PS **Lab ID:** A503049-01

Analyte	Results	Flag	MDL	PQL	Units	Method	Notes
Chlorophyll a	0.84		0.50	0.50	mg/m3	SM 10200H-2001	QR-04
Coliform, Fecal	1		1	1	CFU/100 ml	SM 9222D-1997	

Client ID: Wheelings PS (set 2) **Lab ID:** A503049-02

Analyte	Results	Flag	MDL	PQL	Units	Method	Notes
Coliform, Fecal	1		1	1	CFU/100 ml	SM 9222D-1997	

ANALYTICAL RESULTS

Description: Wheelings PS | **Lab Sample ID:** A503049-01 | **Received:** 05/15/15 11:55
Matrix: Surface Water | **Sampled:** 05/15/15 09:35 | **Work Order:** A503049
Project: Test America - | **Sampled By:**

Classical Chemistry Parameters

^ - ENCO Orlando certified analyte [NELAC E83182]

Analyte [CAS Number]	Results	Flag	Units	DF	MDL	PQL	Batch	Method	Analyzed	By	Notes
Chlorophyll a [42617-16-3]^	**0.84**		mg/m3	1	0.50	0.50	5E15027	SM 10200H-2001	05/20/15 11:07	M1N	QR-04

Microbiological Parameters

^ - ENCO Orlando certified analyte [NELAC E83182]

Analyte [CAS Number]	Results	Flag	Units	DF	MDL	PQL	Batch	Method	Analyzed	By	Notes
Coliform, Fecal^	**1**		CFU/100 ml	1	1	1	5E15030	SM 9222D-1997	05/16/15 12:00	M1N	

Description: Wheelings PS (set 2) | **Lab Sample ID:** A503049-02 | **Received:** 05/15/15 11:55
Matrix: Surface Water | **Sampled:** 05/15/15 09:35 | **Work Order:** A503049
Project: Test America - | **Sampled By:**

Microbiological Parameters

^ - ENCO Orlando certified analyte [NELAC E83182]

Analyte [CAS Number]	Results	Flag	Units	DF	MDL	PQL	Batch	Method	Analyzed	By	Notes
Coliform, Fecal^	**1**		CFU/100 ml	1	1	1	5E15030	SM 9222D-1997	05/16/15 12:00	M1N	

QUALITY CONTROL DATA

Classical Chemistry Parameters - Quality Control

Batch 5E15027 - NO PREP

Blank (5E15027-BLK1) Prepared: 05/15/2015 12:07 Analyzed: 05/20/2015 11:07

Analyte	Result	Flag	POL	Units	Spike Level	Source Result	%REC	%REC Limits	RPD	RPD Limit	Notes
Chlorophyll a	0.50	U	0.50	mg/m3							

Duplicate (5E15027-DUP1) Prepared: 05/15/2015 12:07 Analyzed: 05/20/2015 11:07

Source: A503049-01

Analyte	Result	Flag	POL	Units	Spike Level	Source Result	%REC	%REC Limits	RPD	RPD Limit	Notes
Chlorophyll a	0.59		0.50	mg/m3		0.84			36	25	QR-04

Microbiological Parameters - Quality Control

Batch 5E15030 - NO PREP

Blank (5E15030-BLK1) Prepared: 05/15/2015 12:33 Analyzed: 05/16/2015 12:00

Analyte	Result	Flag	POL	Units	Spike Level	Source Result	%REC	%REC Limits	RPD	RPD Limit	Notes
Coliform, Fecal	**Absent**	**U**	1	CFU/100 ml							

Duplicate (5E15030-DUP1) Prepared: 05/15/2015 12:33 Analyzed: 05/16/2015 12:00

Source: A503049-02

Analyte	Result	Flag	POL	Units	Spike Level	Source Result	%REC	%REC Limits	RPD	RPD Limit	Notes
Coliform, Fecal	1.0		1	CFU/100 ml		1.0			0	25	

FLAGS/NOTES AND DEFINITIONS

PQL	PQL: Practical Quantitation Limit.
B	Results are based upon membrane filter colony counts that are outside the method indicated ideal range.
I	The reported value is between the laboratory method detection limit (MDL) and the practical quantitation limit (PQL).
J	Estimated value.
K	Off-scale low; Actual value is known to be less than the value given.
L	Off-scale high; Actual value is known to be greater than value given.
M	Presence of analyte is verified but not quantified; the actual value is less than the MRL but greater than the MDL.
N	Presumptive evidence of presence of material.
O	Sampled, but analysis lost or not performed.
Q	Sample exceeded the accepted holding time.
T	Value reported is less than the laboratory method detection limit. The value is reported for informational purposes only and shall not be used in statistical analysis.
U	Indicates that the compound was analyzed for but not detected.
V	Indicates that the analyte was detected in both the sample and the associated method blank.
Y	The laboratory analysis was from an improperly preserved sample. The data may not be accurate.
Z	Too many colonies were present (TNTC); the numeric value represents the filtration volume.
?	Data are rejected and should not be used. Some or all of the quality control data for the analyte were outside criteria, and the presence or absence of the analyte cannot be determined from the data.
*****	Not reported due to interference.
QR-04	Duplicate precision outside acceptance limits due to low analyte concentration.

TestAmerica Tampa
6712 Benjamin Road
Suite 100
Tampa, FL 33634
Phone: 813.885.7427 Fax:

Nancy Robertson contact TAMPA (PM)

Chain of Custody Record

024495

TestAmerica
THE LEADER IN ENVIRONMENTAL TESTING
TestAmerica Laboratories, Inc.
TAL-8210 (0713)

Regulatory Program: ☐ DW ☐ NPDES ☐ RCRA ☐ Other:

Client Contact	Project Manager: Nancy Robertson	Site Contact:	Date:	COC No:
Company Name: ENCO	Tel/Fax:	Lab Contact:	Carrier:	____ of ____ COCs
Address:	Analysis Turnaround Time			Sampler:
City/State/Zip: Orlando FL	☐ CALENDAR DAYS ☐ WORKING DAYS			For Lab Use Only:
Phone:	TAT if different from Below ____			Walk-in Client:
Fax:	☐ 2 weeks			Lab Sampling:
Project Name:	☐ 1 week			
Site:	☐ 2 days			Job / SDG No.:
Project# 66008532	☐ 1 day			

Sample Identification	Sample Date	Sample Time	Sample Type (C=Comp, G=Grab)	Matrix	# of Cont.	Filtered Sample (Y/N)	Perform MS / MSD (Y/N)	Fecal Coliform	SHLA	Sample Specific Notes:
Wheelings PS	5/15/15	935	G	SW	4			✓	✓	A503049
Wheelings PS (set 2)	5/15/15	935	G	SW	2			✓		

Preservation Used: 1= Ice, 2= HCl; 3= H2SO4; 4=HNO3; 5=NaOH; 6= Other ____

Possible Hazard Identification:
Are any samples from a listed EPA Hazardous Waste? Please List any EPA Waste Codes for the sample in the Comments Section if the lab is to dispose of the sample.
☐ Non-Hazard ☐ Flammable ☐ Skin Irritant ☐ Poison B ☐ Unknown

Sample Disposal (A fee may be assessed if samples are retained longer than 1 month)
☐ Return to Client ☐ Disposal by Lab ☐ Archive for ____ Months

Special Instructions/QC Requirements & Comments:

Custody Seals Intact: ☐ Yes ☐ No | Custody Seal No.: | Cooler Temp. (°C): Obs'd: ____ Corr'd: ____ | Therm ID No.: ____

Relinquished by:	Company:	Date/Time:	Received by:	Company:	Date/Time:
[signature]	TA Orlando	5/15/15 1155	Brandy Hurt	ENCO	11.55 5/15/15
Relinquished by:	Company:	Date/Time:	Received by:	Company:	Date/Time:
Relinquished by:	Company:	Date/Time:	Received in Laboratory by:	Company:	Date/Time:

21.4

TestAmerica Tampa
6712 Benjamin Road Suite 100
Tampa, FL 33634
Phone (813) 885-7427 Fax (813) 885-7049

Chain of Custody Record

TestAmerica
THE LEADER IN ENVIRONMENTAL TESTING

5/26/2015

Client Information	Sampler:	Lab PM: Robertson, Nancy	Carrier Tracking No(s):	COC No: 660-62248-19984.1
Client Contact: Rasesh Shah	Phone:	E-Mail: nancy.robertson@testamericainc.com		Page: Page 1 of 1
Company: Tetra Tech, Inc.				Job #
Address: 201 E. Pine St., Ste. 1000	Due Date Requested:			
City: Orlando	TAT Requested (days):			
State, Zip: FL, 32801				
Phone:	PO #: Tt Job# 200-08534-15002, #001			
Email: rasesh.shah@tetratech.com	WO #: Alexander Ave. Improvements Project 4A			
Project Name: Lake Monroe	Project #: 66008532			
Site:	SSOW#:			

Analysis Requested

Preservation Codes:
A - HCL, B - NaOH, C - Zn Acetate, D - Nitric Acid, E - NaHS04, F - MeOH, G - Amchlor, H - Ascorbic Acid, I - Ice, J - DI Water, K - EDTA, L - EDA
M - Hexane, N - None, O - AsNaO2, P - Na2O4S, Q - Na2SO3, R - Na2S2SO3, S - H2SO4, T - TSP Dodecahydrate, U - Acetone, V - MCAA, W - ph 4-5, Z - other (specify)
Other:

Sample Identification	Sample Date	Sample Time	Sample Type (C=comp, G=grab)	Matrix (W=water, S=solid, O=waste/oil, BT=Tissue, A=Air)	Field Filtered Sample (Yes or No)	Perform MS/MSD (Yes or No)	2540C, 2540D	2320B, SM2130B, SM4500_H+	4500_P_E_Ortho - Orthophosphate	6010B, 7470A	2120B - Color	SUBCONTRACT - Chlorophyll A ug/L	9222D - Coliform, Fecal	300_ORGFM_28D - Chloride & Sulfate	350.1 - Ammonia as N	SM4500_S2_F - Total Sulfide	351.2, 353.2_Pres, 365.4, Nitrogen,Total	SM5310_TOC_B - Total Organic Carbon	Total Number of containers	Special Instructions/Note:
			Preservation Code:				N	N	N	D	N	N	R	N	S	GB	S	S		
Wheeling PS Stormwater	5/15/15	935	G	Water			✓	✓	✓	✓	✓	✓	✓	✓	✓	✓	✓	✓		
Wheeling PS Stormwater (Set 2)	5/15/15	935	G	Water									✓							

660-66927 Chain of Custody

Loc: 660
66927

Possible Hazard Identification	Sample Disposal (A fee may be assessed if samples are retained longer than 1 month)
☐ Non-Hazard ☐ Flammable ☐ Skin Irritant ☐ Poison B ☐ Unknown ☐ Radiological	☐ Return To Client ☐ Disposal By Lab ☐ Archive For ____ Months
Deliverable Requested: I, II, III, IV, Other (specify)	Special Instructions/QC Requirements:

Empty Kit Relinquished by:	Date:	Time:	Method of Shipment:		
Relinquished by: Tetra Tech	Date/Time: 5/18/15	Company	Received by:	Date/Time: 5/15/15 @ 1300	Company TA Orlando
Relinquished by:	Date/Time: 5/15/15 @ 1459	Company TA Orlando	Received by:	Date/Time: 05/16/15 1235	Company TA TPA
Relinquished by:	Date/Time:	Company	Received by:	Date/Time:	Company
Custody Seals Intact: Δ Yes Δ No	Custody Seal No.:		Cooler Temperature(s) °C and Other Remarks: 1.0/1.5°C	660-66927	

Login Sample Receipt Checklist

Client: Tetra Tech, Inc.

Job Number: 660-66927-1

Login Number: 66927
List Number: 1
Creator: Conner, Keaton

List Source: TestAmerica Tampa

Question	Answer	Comment
Radioactivity wasn't checked or is </= background as measured by a survey meter.	True	
The cooler's custody seal, if present, is intact.	True	
Sample custody seals, if present, are intact.	True	
The cooler or samples do not appear to have been compromised or tampered with.	True	
Samples were received on ice.	True	
Cooler Temperature is acceptable.	True	
Cooler Temperature is recorded.	True	
COC is present.	True	
COC is filled out in ink and legible.	True	
COC is filled out with all pertinent information.	True	
Is the Field Sampler's name present on COC?	False	
There are no discrepancies between the containers received and the COC.	True	
Samples are received within Holding Time.	True	
Sample containers have legible labels.	True	
Containers are not broken or leaking.	True	
Sample collection date/times are provided.	True	
Appropriate sample containers are used.	True	
Sample bottles are completely filled.	True	
Sample Preservation Verified.	True	
There is sufficient vol. for all requested analyses, incl. any requested MS/MSDs	True	
Containers requiring zero headspace have no headspace or bubble is <6mm (1/4").	True	
Multiphasic samples are not present.	True	
Samples do not require splitting or compositing.	True	
Residual Chlorine Checked.	N/A	

Login Sample Receipt Checklist

Client: Tetra Tech, Inc.

Job Number: 660-66927-1

Login Number: 66927
List Number: 3
Creator: Perez, Trina M

List Source: TestAmerica Pensacola
List Creation: 05/19/15 11:20 AM

Question	Answer	Comment
Radioactivity wasn't checked or is </= background as measured by a survey meter.	N/A	
The cooler's custody seal, if present, is intact.	True	
Sample custody seals, if present, are intact.	N/A	
The cooler or samples do not appear to have been compromised or tampered with.	True	
Samples were received on ice.	True	
Cooler Temperature is acceptable.	True	
Cooler Temperature is recorded.	True	0.4°C IR-6
COC is present.	True	
COC is filled out in ink and legible.	True	
COC is filled out with all pertinent information.	True	
Is the Field Sampler's name present on COC?	True	
There are no discrepancies between the containers received and the COC.	True	
Samples are received within Holding Time.	True	
Sample containers have legible labels.	True	
Containers are not broken or leaking.	True	
Sample collection date/times are provided.	True	
Appropriate sample containers are used.	True	
Sample bottles are completely filled.	True	
Sample Preservation Verified.	True	
There is sufficient vol. for all requested analyses, incl. any requested MS/MSDs	True	
Containers requiring zero headspace have no headspace or bubble is <6mm (1/4").	True	
Multiphasic samples are not present.	True	
Samples do not require splitting or compositing.	True	
Residual Chlorine Checked.	N/A	

Login Sample Receipt Checklist

Client: Tetra Tech, Inc.

Job Number: 660-66927-1

Login Number: 66927
List Number: 2
Creator: White, Menica R

List Source: TestAmerica Savannah
List Creation: 05/19/15 08:43 AM

Question	Answer	Comment
Radioactivity wasn't checked or is </= background as measured by a survey meter.	N/A	
The cooler's custody seal, if present, is intact.	True	
Sample custody seals, if present, are intact.	True	
The cooler or samples do not appear to have been compromised or tampered with.	True	
Samples were received on ice.	True	
Cooler Temperature is acceptable.	True	
Cooler Temperature is recorded.	True	
COC is present.	True	
COC is filled out in ink and legible.	True	
COC is filled out with all pertinent information.	True	
Is the Field Sampler's name present on COC?	N/A	
There are no discrepancies between the containers received and the COC.	True	
Samples are received within Holding Time.	True	
Sample containers have legible labels.	True	
Containers are not broken or leaking.	True	
Sample collection date/times are provided.	True	
Appropriate sample containers are used.	True	
Sample bottles are completely filled.	True	
Sample Preservation Verified.	True	
There is sufficient vol. for all requested analyses, incl. any requested MS/MSDs	True	
Containers requiring zero headspace have no headspace or bubble is <6mm (1/4").	N/A	
Multiphasic samples are not present.	True	
Samples do not require splitting or compositing.	True	
Residual Chlorine Checked.	N/A	

Appendix E

100% Design Drawings

Redacted per Florida Statute 119.071b

Page 518

PROJECT 4A - ALEXANDER AVE WMS RECLAIMED WATER AUGMENTATION FACILITY PROCESS FLOW DIAGRAM

Redacted per Florida Statute 119.071 (3)b1

Page 519

PROJECT 4A - ALEXANDER AVE WMS

RECLAIMED WATER AUGMENTATION FACILITY HYDRAULIC PROFILE

Redacted per Florida Statute 119.071 (3)b1

Page 520

PROJECT 4A-ALEXANDER AVE WMS

RECLAIMED WATER AUGMENTATION FACILITY

EXISTING CONDITION AND DEMOLITION PLAN

Redacted per Florida Statute 119.071 (3)b1

Page 521

PROJECT 4A - ALEXANDER AVE WMS

RECLAIMED WATER AUGMENTATION FACILITY

OVERALL YARD PIPING PLAN

Redacted per Florida Statute 119.071 (3)b1

Page 522

PROJECT 4A - ALEXANDER AVE WMS

RECLAIMED WATER AUGMENTATION FACILITY

RAW WATER

3 MG GST PLAN

Redacted per Florida Statute 119.071 (3)b1

Page 523

PROJECT 4A - ALEXANDER AVE WMS

RECLAIMED WATER AUGMENTATION FACILITY

RAW WATER

3MG GST

SECTION AND DETAILS

Redacted per Florida Statute 119.071 (3)b1

Page 524

PROJECT 4A - ALEXANDER AVE WMS RECLAIMED WATER AUGMENTATION FACILITY

RAW WATER

3 MG GST

SECTION AND DETAILS

Redacted per Florida Statute 119.071 (3)b1

Page 525

PROJECT 4A - ALEXANDER AVE WMS

RECLAIMED WATER AUGMENTATION FACILITY

RAW WATER

3 MG GST

SECTION AND DETAILS

Redacted per Florida Statute 119.071 (3)b1

Page 526

PROJECT 4A - ALEXANDER AVE WMS

RECLAIMED WATER AUGMENTATION FACILITY

RAW WATER TRANSFER

PUMP STATIN PLAN

Redacted per Florida Statute 119.071 (3)b1

Page 527

PROJECT 4A - ALEXANDER AVE WMS

RECLAIMED WATER AUGMENTATION FACILITY

RAW WATER TRANSFER

PUMP STATION SECTIONS

Redacted per Florida Statute 119.071 (3)b1

Page 528

PROJECT 4A - ALEXANDER AVE WMS

RECLAIMED WATER AUGMENTATION FACILITY

RAW WATER TRANSFE

PUMP STATION SECTIONS

Redacted per Florida Statute 119.071 (3)b1

Page 529

PROJECT 4A - ALEXANDER AVE WMS RECLAIMED WATER AUGMENTATION FACILITY

ALUM AND POLYMER

STORAGE AND FEED PLAN

Redacted per Florida Statute 119.071 (3)b1

Page 530

PROJECT 4A - ALEXANDER AVE. WMS

RECLAIMED WATER AUGMENTATION

FACILITY FLOCCULATION PLAN

Redacted per Florida Statute 119.071 (3)b1

Page 531

PROJECT 4A - ALEXANDER AVE WMS

RECLAIMED WATER AUGMENTATION FACILITY

FLOCCULATION SECTIONS

Redacted per Florida Statute 119.071 (3)b1

Page 532

PROJECT 4A- ALEXANDER AVE WMS

RECLAIMED WATER AUGMENTATION FACILITY

FLOCCULATION SECTIONS

Redacted per Florida Statute 119.071 (3)b1

Page 533

PROJECT 4A - ALEXANDER AVE WMS

RECLAIMED WATER AUGMENTATION FACILITY

DISK FILTER PLAN

Redacted per Florida Statute 119.071 (3)b1

Page 534

PROJECT 4A - ALEXANDER AVE WMS

RECLAIMED WATER AUGMENTATION FACILITY

DISK FILTER SECTIONS

Redacted per Florida Statute 119.071 (3)b1

Page 535

PROJECT 4A - ALEXANDER AVE WMS RECLAIMED WATER AUGMENTATION FACILITY

DISK FILTER SECTIONS

Redacted per Florida Statute 119.071 (3)b1

Page 536

PROJECT 4A - ALEXANDER AVE WMS

RECLAIMED WATER AUGMENTATION FACILITY

DISK FILTER 3D VIEWS

Redacted per Florida Statute 119.071 (3)b1

Page 537

PROJECT 4A - ALEXANDER AVE WMS RECLAIMED WATER AUGMENTATION FACILITY

SODIUM HYPOCHLORITE

STORAGE AND FEED PLAN

Redacted per Florida Statute 119.071 (3)b1

Page 538

PROJECT 4A - ALEXANDER AVE WMS

RECLAIMED WATER AUGMENTATION FACILITY

CCC AND FWTPS PLAN

Redacted per Florida Statute 119.071 (3)b1

Page 539

PROJECT 4A - ALEXANDER AVE WMS

RECLAIMED WATER AUGMENTATION FACILITY

CCC AND FWTPS PLAN

Redacted per Florida Statute 119.071 (3)b1

Page 540

PROJECT 4A - ALEXANDER AVE WMS

RECLAIMED WATER AUGMENTATION FACILITY

CCC AND FWTPS SECTIONS

Redacted per Florida Statute 119.071 (3)b1

Page 541

PROJECT 4A - ALEXANDER AVE WMS

RECLAIMED WATER AUGMENTATION FACILITY

CCC AND FWTPS 3D VIEW

Redacted per Florida Statute 119.071 (3)b1

Page 542

PROJECT 4A - ALEXANDER AVE WMS

RECLAIMED WATER AUGMENTATION FACILITY

RECLAIMED WATER

1MG GST PLAN

Redacted per Florida Statute 119.071 (3)b1

Page 543

PROJECT 4A - ALEXANDER AVE WMS

RELAIMED WATER AUGMENTATION FACILITY

EXISTING RECLAIMED WATER

1MG GST MODIFICATINS PLAN

Redacted per Florida Statute 119.071 (3)b1

Page 544

PROJECT 4A - ALEXANDER AVE WMS

RECLAIMED WATER AUGMENTATION FACILITY

OVERALL SITE PLAN

Redacted per Florida Statute 119.071 (3)b1

Page 545

PROJECT 4A - ALEXANDER AVE WMS

RECLAIMED WATER AUGMENTATION FACILITY

PAVING, GRADING & DRAINAGE PLAN

Redacted per Florida Statute 119.071 (3)b1

Page 546

PROJECT 4A - ALEXANDER AVE WMS

RECLAIMED WATER AUGMENTATION FACILITY

PAVING, GRADING & DRAINAGE PLAN

Redacted per Florida Statute 119.071 (3)b1

Page 547

PROJECT 4A - ALEXANDER AVE WMS

RECLAIMED WATER AUGMENTATION FACILITY

CIVIL DETAILS

Redacted per Florida Statute 119.071 (3)b1

Page 548

PROJECT 4A - ALEXANDER AVE WMS

RECLAIMED WATER AUGMENTATION FACILITY

CIVIL DETAILS

Redacted per Florida Statute 119.071 (3)b1

Page 549

PROJECT 4A - ALEXANDER AVE WMS

RECLAIMED WATER AUGMENTATION FACILITY

ELECTRICAL SITE PLAN

Redacted per Florida Statute 119.071 (3)b1

Page 550

PROJECT 4A - ALEXANDER AVE WMS

RECLAIMED WATER AUGMENTATION FACILITY

ELECTRICAL SINGLE LINE DIAGRAM

TETRA TECH

Tetra Tech
201 E. Pine Street, Suite 1000
Orlando, FL 32801

tetratech.com

City of Deltona

2345 Providence Blvd.
Deltona, FL 32725

Agenda Memo

AGENDA ITEM: A.

TO: Mayor and Commission **AGENDA DATE:** 12/12/2016

FROM: Jane K. Shang, City Manager **AGENDA ITEM:** 11 - A

SUBJECT:
Request for approval of 2nd Amendment with Verizon Wireless for Land at Dewey Boster Park. CityScape, cell tower consultants. Jane K. Shang, City Manager (386) 878-8850

Strategic Goal: Fiscal Issues

LOCATION:
Dewey Boster

BACKGROUND:
This is an extension of the Site Agreement for Land with Verizon Wireless for a cell tower construction at Dewey Boster Park located at 1190 Saxon Blvd. This cell tower provides cell tower services to residents and businesses in the areas near the tower. The extension provides annual revenue to the City in the amount of Twenty-Five Thousand Nine Hundred and Twenty Dollars ($25,920.00), with a 20% rent increase every five years. This agreement gives the City four (4) additional five (5) year renewal terms. This extension was negotiated by the City's cell tower consultant, CityScape. A representative of CityScape will be at the Commission meeting to discuss the extension and answer any questions anyone has regarding this agreement.

COST:
N/A

SOURCE OF FUNDS:
N/A

ORIGINATING DEPARTMENT:
City Manager's Department, Jane K. Shang, (386) 878-8850

STAFF RECOMMENDATION PRESENTED BY:
Jane K. Shang, City Manager, "Staff recommend the City to approve the 2nd Amendment to Site for Land with Verizon Wireless as negotiated by CityScape, the City's Cell Tower Consultants."

POTENTIAL MOTION:
"Move to approve the 2nd Amendment to Site for Land with Verizon Wireless."

powered by Legistar™

SECOND AMENDMENT TO SITE AGREEMENT FOR LAND, DATED SEPTEMBER 1, 1999, BETWEEN THE CITY OF DELTONA AND VERIZON WIRELESS PERSONAL COMMUNICATIONS LP, D/B/A VERIZON WIRELESS, SUCCESSOR-IN-INTEREST TO PRIMECO PERSONAL COMMUNICATIONS, LIMITED PARTNERSHIP, A DELAWARE LIMITED PARTNERSHIP

THIS SECOND AMENDMENT TO SITE AGREEMENT FOR LAND (this "Amendment") is made effective as of the latter signature date below (hereinafter the "Effective Date"), by and between the **CITY OF DELTONA,** a municipal corporation, with its offices located at 2345 Providence Blvd., Deltona, FL 32725, as Owner and hereinafter "Owner", and Verizon Wireless Personal Communications L.P. a Delaware limited partnership, d/b/a Verizon Wireless (with its principal offices located at Attn: Network Real Estate, 180 Washington Valley Road, Bedminster, NJ 07921, hereinafter "Lessee".

WITNESSETH

WHEREAS, Owner owns the real property described on **Exhibit A** attached hereto and by this reference made a part hereof (the "Parent Parcel"); and

WHEREAS, Owner and Lessee, or their predecessors in interest, entered into a Site Agreement for Land on September 1, 1999, as amended by that certain Amendment to Site Agreement for Land dated April 17, 2000 (hereinafter collectively the "Agreement"), whereby Lessee leased from Owner a portion of real property (the "Property") for the installation, removal, replacement, maintenance and operation of a communications facility, including the construction and operation of a communications tower structure (hereinafter, the "Tower") at Dewey O Booster Park 1190 Saxon Boulevard, Deltona, FL (incorrectly addressed as 3050 Riverhead Drive in the original Lease Agreement), as more fully described in the Agreement, as amended, and described on **Exhibit A** attached hereto; and

WHEREAS, Verizon Wireless Personal Communications LP d/b/a Verizon Wireless, is the current Lessee under the Agreement; and

WHEREAS, Lessee, Verizon Communications, Inc. a Delaware corporation, and other parties identified therein, entered into a Management Agreement and a Master Prepaid Lease, both with an effective date of March 27, 2015 and both with ATC Sequoia LLC, a Delaware limited liability company ("American Tower"), pursuant to which American Tower subleases, manages, operates and maintains, on behalf of Lessee, as applicable, the Leased Premises, all as more particularly described therein; and

WHEREAS, Lessee has granted American Tower a limited power of attorney (the "POA") to, among other things, prepare, negotiate, execute, deliver, record and/or file certain documents on behalf of Lessee, all as more particularly set forth in the POA; and

WHEREAS, Owner and Lessee desire to amend the terms of the Agreement to extend the term thereof and to otherwise modify the Lease as expressly provided herein.

NOW, THEREFORE, for good and valuable consideration, the receipt and sufficiency of which is hereby acknowledged, the parties hereto agree to be legally bound to this Amendment as follows:

1. **Recitals**. The foregoing recitals are true and correct in all respects and are hereby made a part of this Amendment for all purposes.

2. **Defined Terms**. Any capitalized terms not defined herein shall have the meaning ascribed to them in the Agreement.

3. **Status of Parties/Estoppel**. Owner and Lessee acknowledge that the term of the Agreement has expired but has been continued on a month to month basis and is in full force and effect and Owner does not have any presently existing claims against Lessee or any offsets against rent due under the Agreement. There are no (i) defaults of Lessee under the Agreement or (ii) existing circumstances which with the passage of time, nor notice, or both, would give rise to a default under the Agreement.

4. **Term Extended**. Beginning on August 1, 2016, a new term shall commence which will end on December 31, 2016. Beginning January 1, 2017, Lessee shall have the right to extend this Agreement for Four (4)

additional terms of Five (5) years each (each, an "Additional Renewal Term"). Unless Lessee notifies Owner of its intention not renew any Additional Renewal Term prior to the expiration of the then current term, each Additional Renewal Term shall automatically be exercised without notice or any other action of any kind by Lessee. The annual rent for each Additional Renewal Term shall be escalated in accordance with the terms of Section 5 of this Amendment and treated as of the Additional Renewal Terms were always a part of Section 2 of the Agreement.

5. **Rent.** Section 3 of the Agreement is hereby amended to reflect that pursuant to the terms of the Agreement, rent paid under and pursuant to Section 3(a) of the Agreement (hereinafter "Rent") is Twenty-Five Thousand Nine Hundred Twenty and No/100's Dollars ($25,920.00) per year, paid in monthly installments of Two Thousand One Hundred Sixty and No/100's Dollars ($2,160.00) which shall be payable through December 31, 2016. Commencing on January 1, 2017, the Rent shall be increased to an amount of Twenty Seven Thousand and No/100's Dollars ($27,000.00) per year, and thereafter be paid in equal monthly installments of Two Thousand Two Hundred Fifty and No/100's Dollars ($2,250.00) on the first day each month. Beginning on January 1, 2022 and on the beginning of each Additional Renewal Term thereafter, Rent shall escalate by an amount equal to Twenty percent (20%) of the then current Rent. Notwithstanding anything to the contrary contained in the Agreement or this Amendment, all Rent and any other payments expressly required to be paid by Lessee to Owner shall be paid to **City of Deltona FL**.

6. **Notices.** The Agreement is hereby amended to reflect that notices shall be sent to the address of the party set forth below, or to such other address as one party may provide in writing to the other.

If to OWNER:

City of Deltona
2345 Providence Blvd.
Deltona, FL 32725
Attn: City Manager

With a copy to:
City of Deltona
2345 Providence Blvd.
Deltona, FL 32725
Attn: City Attorney

LESSEE:

Verizon Wireless Personal Communications LP
d/b/a Verizon Wireless
180 Washington Valley Road
Bedminster, NJ 07921
Attention: Network Real Estate

With a copy to:

American Tower
116 Huntington Avenue
Boston, MA 02116
Attn: Legal Department

With a copy to:

American Tower
10 Presidential Way
Woburn, MA 01801

7. **Statements**. Owner and Lessee each hereby warrant to the other that the person executing this Amendment on behalf of the warranting party has the full right, power and authority to enter into, and execute this Amendment on that party's behalf, and that no consent from any other person or entity is necessary as a condition precedent to the legal effect of this Amendment. Owner hereby warrants to Lessee that to the best of their knowledge there are no agreements, liens, encumbrances, claims, claims of lien, proceedings, or other matters related to,

encumbering, asserted against, threatened against, and/or pending with respect to the Property which do or could adversely impact, limit, and/or impair Lessee's rights under the Agreement, as amended and modified by this Amendment. The warranties of the parties made in this Section shall survive the execution and delivery of this Amendment.

8. **Lessee's Securitization Rights; Estoppel**. Owner hereby consents to the granting by Lessee and/or American Tower of one or more leasehold mortgages, collateral assignments, liens, and/or other security interests (collectively, a "Security Interest") in Lessee's (or American Tower's) interest in the Agreement, as amended, and all of Lessee's (or American Tower's) property and fixtures attached to and lying within the Property and further consents to the exercise by Lessee's (or American Tower's) mortgagee ("Tenant's Mortgagee") of its rights to exercise its remedies, including without limitation foreclosure, with respect to any such Security Interest. Owner shall recognize the holder of any such Security Interest of which Owner is given prior written notice (any such holder, a "Holder") as "Lessee" hereunder in the event a Holder succeeds to the interest of Lessee and/or American Tower hereunder by the exercise of such remedies.

9. **Counterparts.** This Amendment may be executed in several counterparts, each of which when so executed and delivered, shall be deemed an original and all of which, when taken together, shall constitute one and the same instrument, even though all parties are not signatories to the original or the same counterpart. Furthermore, the parties may execute and deliver this Amendment by electronic means such as .pdf or similar format. Each of the parties agrees that the delivery of the Amendment by electronic means will have the same force and effect as delivery of original signatures and that each of the parties may use such electronic signatures as evidence of the execution and delivery of the Amendment by all parties to the same extent as an original signature.

10. **Memorandum**. Contemporaneously with the execution of this Amendment, Owner hereby agrees to execute and return to Lessee an original Memorandum of Agreement in the form and of the substance attached hereto as **Exhibit B** and by this reference made a part hereof (the "Memorandum") executed by Owner, together with any applicable forms needed to record the Memorandum, which forms shall be supplied by Lessee to Owner.

11. **Full Force and Effect**. All remaining provisions of the Agreement shall remain in full force and effect as to all other terms and conditions, and shall remain binding on the parties hereto.

12. **Miscellaneous**. The Agreement and this Amendment contain all agreements, promises or understandings between Owner and Lessee, and no verbal or oral agreements, promises or understandings shall be binding upon either the Owner or Lessee in any dispute, controversy or proceeding at law, and any addition, variation or modification to the Agreement and/or this Amendment shall be void and ineffective unless made in writing and signed by the parties. In the event any provision of the Agreement and/or this Amendment is found to be invalid or unenforceable, such a finding shall not affect the validity and enforceability of the remaining provisions of the Agreement and/or this Amendment.

(SIGNATURES TO FOLLOW)

IN WITNESS WHEREOF, the parties have set forth their hand and seal as of the date indicated above.

Signed, sealed and delivered in the
Presence of:

_____

Print Name:_____

_____

Print Name:_____

OWNER:
CITY OF DELTONA

By: _____

Jane K. Shang, City Manager

Attest:_____

Joyce Raftery, City Clerk

Date:_____

APPROVED AS TO FORM:

_____
Gretchen Vose, City Attorney

STATE OF FLORIDA
COUNTY OF VOLUSIA

The foregoing instrument was acknowledged before me this day of_____, 2016 by Jane K. Shang, City Manager of the CITY OF DELTONA, for an on behalf of said entity and for the purposes, intents and consideration stated in the foregoing instrument. She is personally known to me or has produced as identification.

In Witness Whereof, I have hereunto signed this acknowledgment with said appearer and said witnesses, on the date set forth above.

_____
Notary Public

_____
Printed, typed or stamped name of Notary
My commission number and expiration date:

[Seal]

Site Name: Deltona FL
ATC Site No. 412360
VZW Site No. 32932

LESSEE:

Verizon Wireless Personal Communications LP
d/b/a Verizon Wireless
a Delaware limited liability company

By: ATC Sequoia LLC,
a Delaware limited liability company
Its: Attorney-in-Fact

By:_____

Name:_____
Title:_____

Date:_____

Signed, sealed and delivered in the
Presence of:

_____

Print Name:_____

_____

Print Name:_____

STATE OF_____

COUNTY OF _____

The foregoing instrument was acknowledged before me this __day of_____, 2016 by _____, as_____of Verizon Wireless Personal Communications LP d/b/a Verizon Wireless, a Delaware limited liability company, the Attorney-in-Fact for ATC Sequoia LLC, a Delaware limited liability company. He/she is personally known to me or has provided_____as identification.

In Witness Whereof, I have hereunto signed this acknowledgment with said appearer and said witnesses on the date set forth above.

_____
Notary Public

_____
Printed, typed or stamped name of Notary
My commission number and expiration date:

[Seal]

Site Name: Deltona FL
ATC Site No. 412360
VZW Site No. 32932

EXHIBIT A

This Exhibit A may be replaced at Lessee's option as described below

PARENT PARCEL

Lessee shall have the right to replace this description with a description obtained from Owner's deed (or deeds) that include the land area encompassed by the Agreement and Lessee's improvements thereon

The Parent Parcel consists of the entire legal taxable lot owned by Owner as described in a deed (or deeds) to Owner of which the Property is a part thereof with such Parent Parcel being described below:

Being situated in the County of Volusia, State of Florida, and being known as
Volusia County APN: 8130-11-06-0010.

PROPERTY

Lessee shall have the right to replace this description with a description obtained from the Agreement or from a description obtained from an as-built survey conducted by Lessee.

16.00 FEET x 30.00 FEET LEASE AREA

lying within the following described parent tract:

All of Tract "F", Deltona Lakes Unit Eleven, according to the Plat thereof, as recorded in Plat Book 25, Pages 193 through 206 inclusive, of the Public Records of Volusia County, Florida.

being more particularly described as follows:

Begin at a ½" iron rod (#4596) located at the Northerly corner of a 16.00 feet x 30.00 feet area, said Point of Beginning lies 304.78 feet, measured at right angles Northerly of the Southerly line of said parent tract, and 278.60 feet, measured at right angles, Easterly of the Northerly extension of the Westerly line of said parent tract, which bears N 00°09'11" E, said Point of Beginning is further referenced as follows:

1. A 4"x 4" concrete monument located at the monumented point of curvature of said parent tract along the Westerly right of way line of Saxon Boulevard, and lying N 00°09'11" E, 79.00 feet from said Southeasterly corner of said parent tract, lies S 70°18'46" E, 675.25 feet from said Point of Beginning.

2. A 4"x 4" concrete monument located at the monumented intersection of the Southerly line of said parent tract and the Easterly right of way line of Daveport Drive, lies S 08°08'26" W, 307.64 feet from said Point of Beginning.

3. A 4"x 4" concrete monument located at the monumented point of tangency of said parent tract along the Westerly right of way line of Saxon Boulevard, and lying N 18°40'24" W, 364.66 feet from said reference point 1, lies N 77°11'39" E, 532.27 feet from said Point of Beginning.

Thence, leaving said Northerly corner and said Point of Beginning, run S 35°43'04" W, 30.00 feet to a ½" iron rod (#4596); Thence run S 54°16'56" E, 16.00 feet to a ½" iron rod (#4596); Thence run N 35°43'04" E, 30.00 feet to a ½" iron rod (#4596); Thence run N 54°16'56" W, 16.00 feet to the Point of Beginning. Containing 480 square feet or 0.01 acres more or less.

ACCESS AND UTILITIES

The access and utility easements include all easements of record as well those currently utilized by Lessee for ingress, egress and utility purposes from the Property to and from a public right of way including but not limited to:

10.00 FEET AND 20.00 FEET INGRESS\EGRESS EASEMENT

lying within the following described parent tract:

All of Tract "F", Deltona Lakes Unit Eleven, according to the Plat thereof, as recorded in Plat Book 25, Pages 193 through 206 inclusive, of the Public Records of Volusia County, Florida.

being more particularly described as follows:

Commence at a ½" iron rod (#4596) located at the Northerly corner of a 16.00 feet x 30.00 feet area, said Point of Commencement lies 304.78 feet, measured at right angles Northerly of the Southerly line of said parent tract, and 278.60 feet, measured at right angles, Easterly of the Northerly extension of the Westerly line of said parent tract, which bears N 00°09'11" E, said Point of Commencement is further referenced as follows:

1. A 4"x 4" concrete monument located at the monumented point of curvature of said parent tract along the Westerly right of way line of Saxon Boulevard, and lying N 00°09'11" E, 79.00 feet from said Southeasterly corner of said parent tract, lies S 70°18'46" E, 675.25 feet from said Point of Commencement.

2. A 4"x 4" concrete monument located at the monumented intersection of the Southerly line of said parent tract and the Easterly right of way line of Daveport Drive, lies S 08°08'26" W, 307.64 feet from said Point of Commencement.

3. A 4"x 4" concrete monument located at the monumented point of tangency of said parent tract along the Westerly right of way line of Saxon Boulevard, and lying N 18°40'24" W, 364.66 feet from said reference point 1, lies N 77°11'39" E, 532.27 feet from said Point of Commencement.

Thence, leaving said Northerly corner and said Point of Commencement, run S 35°43'04" W, 30.00 feet to a ½" iron rod (#4596); Thence run S 54°16'56" E, 16.00 feet to a ½" iron rod (#4596); Thence run N 35°43'04" E, 15.00 feet to the Point of Beginning of a 10.00 feet ingress\egress and utility easement, lying 5.00 feet on both sides of the following described centerline; Thence run S 54°16'56" E, 28.36 feet; Thence run N 35°43'04" E, 36.65 feet; Thence run N 38°21'51" E, 66.50 feet; Thence run N 15°43'40" E, 19.68 feet; Thence run N 41°12'56" E, 45.49 feet; Thence run N 57°10'39" E, 124.08 feet to the Point of Termination of said 10.00 feet wide easement and the Point of Beginning of a 20.00 feet ingress\egress and utility easement, lying 10.00 feet on both sides of the following described centerline; Thence run S 76°13'37" E, 72.96 feet; Thence run N 64°30'54" E, 97.59 feet; Thence run N 28°34'03" W, 80.97 feet; Thence run N 46°20'07" E, 48.12 feet to the Westerly right of way line of Saxon Boulevard, also being the Point of Termination of said 20.00 feet wide easement, lying N 25°45'20" W, 578.13 feet from said reference point 1. The sidelines of said easement are to be shortened or prolonged to meet at angle points and project boundary lines.

AND

20.00 FEET WIDE UTILITY EASEMENT "A"

lying within the following described parent tract:

All of Tract "F", Deltona Lakes Unit Eleven, according to the Plat thereof, as recorded in Plat Book 25, Pages 193 through 206 inclusive, of the Public Records of Volusia County, Florida.

lying 10.00 feet on both sides of the following described centerline:

Commence at a ½" iron rod (#4596) located at the Northerly corner of a 16.00 feet x 30.00 feet area, said Point of Commencement lies 304.78 feet, measured at right angles Northerly of the Southerly line of said parent tract, and 278.60 feet, measured at right angles, Easterly of the Northerly extension of the Westerly line of said parent tract, which bears N 00°09'11" E, said Point of Commencement is further referenced as follows:

1. A 4"x 4" concrete monument located at the monumented point of curvature of said parent tract along the Westerly right of way line of Saxon Boulevard, and lying N 00°09'11" E, 79.00 feet from said Southeasterly corner of said parent tract, lies S 70°18'46" E, 675.25 feet from said Point of Commencement.

2. A 4"x 4" concrete monument located at the monumented intersection of the Southerly line of said parent tract and the Easterly right of way line of Daveport Drive, lies S 08°08'26" W, 307.64 feet from said Point of Commencement.

3. A 4"x 4" concrete monument located at the monumented point of tangency of said parent tract along the Westerly right of way line of Saxon Boulevard, and lying N 18°40'24" W, 364.66 feet from said reference point 1, lies N 77°11'39" E, 532.27 feet from said Point of Commencement.

Thence, leaving said Northerly corner and said Point of Commencement, run S 35°43'04" W, 30.00 feet to a ½" iron rod (#4596); Thence run S 54°16'56" E, 16.00 feet to a ½" iron rod (#4596); Thence run N 35°43'04" E, 15.00 feet to the Point of Beginning of a 10.00 feet ingress\egress and utility easement, lying 5.00 feet on both sides of the following described centerline; Thence run S 54°16'56" E, 23.36 feet; Thence run N 35°43'04" E, 36.77 feet; Thence run N 38°21'51" E, 65.62 feet; Thence run N 15°43'40" E, 19.81 feet; Thence run N 41°12'56" E, 47.32 feet; Thence run N 57°10'39" E, 28.32 feet; Thence run S 32°49'21" E, 29.92 feet to the Point of Termination lying N 27°27'19" E, 445.78 feet from said reference point 2. The sidelines of said easement are to be shortened or prolonged to meet at angle points and project boundary lines.

AND

20.00 FEET WIDE UTILITY EASEMENT "B"

lying within the following described parent tract:

All of Tract "F", Deltona Lakes Unit Eleven, according to the Plat thereof, as recorded in Plat Book 25, Pages 193 through 206 inclusive, of the Public Records of Volusia County, Florida.

lying 10.00 feet on both sides of the following described centerline:

Commence at a ½" iron rod (#4596) located at the Northerly corner of a 16.00 feet x 30.00 feet area, said Point of Commencement lies 304.78 feet, measured at right angles Northerly of the Southerly line of said parent tract, and 278.60 feet, measured at right angles, Easterly of the Northerly extension of the Westerly line of said parent tract, whicl bears N 00°09'11" E, said Point of Commencement is further referenced as follows:

1. A 4"x 4" concrete monument located at the monumented point of curvature of said parent tract along the Westerly right of way line of Saxon Boulevard, and lying N 00°09'11" E, 79.00 feet from said Southeasterly corner of said parent tract, lies S 70°18'46" E, 675.25 feet from said Point of Commencement.

2. A 4"x 4" concrete monument located at the monumented intersection of the Southerly line of said parent tract and the Easterly right of way line of Daveport Drive, lies S 08°08'26" W, 307.64 feet from said Point of Commencement.

3. A 4"x 4" concrete monument located at the monumented point of tangency of said parent tract along the Westerly right of way line of Saxon Boulevard, and lying N 18°40'24" W, 364.66 feet from said reference point 1, lies N 77°11'39" E, 532.27 feet from said Point of Commencement.

Thence, leaving said Northerly corner and said Point of Commencement, run S 35°43'04" W, 30.00 feet to a ½" iron ro (#4596); Thence run S 54°16'56" E, 16.00 feet to a ½" iron rod (#4596); Thence run N 35°43'04" E, 15.00 feet to the Point of Beginning of a 10.00 feet ingress\egress and utility easement, lying 5.00 feet on both sides of the following described centerline; Thence run S 54°16'56" E, 23.36 feet; Thence run N 35°43'04" E, 36.77 feet; Thence run N 38°21'51" E, 65.62 feet; Thence run N 15°43'40" E, 19.81 feet; Thence run N 41°12'56" E, 47.32 feet; Thence run N 57°10'39" E, 55.42 feet; Thence run N 33°39'33" E, 285.54 feet to the Point of Termination being on the Westerly righ of way line of Saxon Boulevard and lying N 28°49'15" E, 768.22 feet from said reference point 2. The sidelines of said easement are to be shortened or prolonged to meet at angle points and project boundary lines.

EXHIBIT B

FORM OF MEMORANDUM OF AGREEMENT

Site Name: Deltona FL
ATC Site No. 412360
VZW Site No. 32932

Prepared by and Return to:
American Tower
10 Presidential Way
Woburn, MA 01801
Attn: Land Management/Andrew Verwholt, Esq.
ATC Site No: 412360
ATC Site Name: Deltona FL
Assessor's Parcel No(s): 8130-11-06-0010

Prior Recorded Lease Reference:
Book 4543, Page 762
State of Florida
County of Volusia

MEMORANDUM OF AGREEMEMT

This Memorandum of Lease (the "***Memorandum***") is entered into on the _____ day of _____, 201___ by and between the **CITY OF DELTONA,** a municipal corporation, with its offices located at 2345 Providence Blvd., Deltona, FL 32725, as Owner and hereinafter "Owner", and Verizon Wireless Personal Communications L.P. a Delaware limited partnership, d/b/a Verizon Wireless (with its principal offices located at Attn: Network Real Estate, 180 Washington Valley Road, Bedminster, NJ 07921, hereinafter "Lessee".

NOTICE is hereby given of the Agreement (as defined and described below) for the purpose of recording and giving notice of the existence of said Agreement. To the extent that notice of such Agreement has previously been recorded, then this Memorandum shall constitute an amendment of any such prior recorded notice(s).

1. **Parent Parcel and Agreement**. Owner owns the real property described on **Exhibit A** attached hereto and by this reference made a part hereof (the "Parent Parcel"). Owner and Lessee, or their predecessors in interest, entered into a Site Agreement for Land on September 1, 1999, as amended by that certain Amendment to Site Agreement for Land dated April 17, 2000 (hereinafter collectively the "Agreement"), whereby Lessee leased from Owner a portion of real property (the "Property") for the installation, removal, replacement, maintenance and operation of a communications facility, including the construction and operation of a communications tower structure (hereinafter, the "Tower") at Dewey O Booster Park 1190 Saxon Boulevard, Deltona, FL (incorrectly addressed as 3050 Riverhead Drive in the original Lease Agreement), as more fully described in the Agreement, as amended, and described on **Exhibit A** attached hereto. Verizon Wireless Personal Communications LP d/b/a Verizon Wireless, is the current Lessee under the Agreement.

2. **American Tower**. Lessee, Verizon Communications Inc., a Delaware corporation, and other parties identified therein, entered into a Management Agreement and a Master Prepaid Lease, both with an effective date of March 27, 2015 and both with ATC Sequoia LLC, a Delaware limited liability company ("American Tower"), pursuant to which American Tower subleases, manages, operates and maintains, as applicable, the Property, all as more particularly described therein. In connection with these responsibilities, Lessee has also granted American Tower a limited power of attorney (the "POA") to, among other things, prepare, negotiate, execute, deliver, record and/or file certain documents on behalf of Lessee, all as more particularly set forth in the POA.

3. **Expiration Date**. Subject to the terms, provisions, and conditions of the Agreement, and assuming the exercise by Lessee of all renewal options contained in the Agreement, the final expiration date of the Agreement would be December 31, 2036. Notwithstanding the foregoing, in no event shall Tenant be required to exercise any option to renew the term of the Lease.

4. **Property Description**. Lessee shall have the right, exercisable by Lessee at any time during the original or renewal terms of the Agreement, to cause an as-built survey of the Property to be prepared and, thereafter, to replace, in whole or in part, the description(s) of the Property set forth on **Exhibit A** with a legal description or legal descriptions based upon such as-built survey. Upon Lessee's request, Landlord shall execute and deliver any documents reasonably necessary to effectuate such replacement, including, without limitation, amendments to this

Memorandum and to the Agreement.

5. **Effect/Miscellaneous**. This Memorandum is not a complete summary of the terms, provisions and conditions contained in the Agreement. In the event of a conflict between this Memorandum and the Agreement, the Agreement shall control. Owner hereby grants the right to Lessee to complete and execute on behalf of Owner any government or transfer tax forms necessary for the recording of this Memorandum. This right shall terminate upon recording of this Memorandum.

6. **Notices**. All notices shall be sent to the address of the party set forth below, or to such other address as one party may provide in writing to the other.

If to OWNER:

City of Deltona
2345 Providence Blvd.
Deltona, FL 32725
Attn: City Manager

With a copy to:
City of Deltona
2345 Providence Blvd.
Deltona, FL 32725
Attn: City Attorney

LESSEE:

Verizon Wireless Personal Communications LP
d/b/a Verizon Wireless
180 Washington Valley Road
Bedminster, NJ 07921
Attention: Network Real Estate

With a copy to:

American Tower
116 Huntington Avenue
Boston, MA 02116
Attn: Legal Department

With a copy to:

American Tower
10 Presidential Way
Woburn, MA 01801

7. **Counterparts**. This Memorandum may be executed in multiple counterparts, each of which when so executed and delivered, shall be deemed an original and all of which, when taken together, shall constitute one and the same instrument.

[*SIGNATURES COMMENCE ON FOLLOWING PAGE*]

IN WITNESS WHEREOF, Landlord and Tenant have each executed this Memorandum as of the day and year set forth below.

Signed, sealed and delivered in the
Presence of:

_____

Print Name:_____

_____

Print Name:_____

OWNER:
CITY OF DELTONA

By: _____

Jane K. Shang, City Manager

Attest:_____

Joyce Raftery, City Clerk

Date:_____

APPROVED AS TO FORM:

_____
Gretchen Vose, City Attorney

STATE OF FLORIDA
COUNTY OF VOLUSIA

The foregoing instrument was acknowledged before me this day of_____, 2016 by Jane K. Shang, City Manager of the CITY OF DELTONA, for an on behalf of said entity and for the purposes, intents and consideration stated in the foregoing instrument. She is personally known to me or has produced as identification.

In Witness Whereof, I have hereunto signed this acknowledgment with said appearer and said witnesses, on the date set forth above.

_____
Notary Public

_____
Printed, typed or stamped name of Notary
My commission number and expiration date:

[Seal]

Site Name: Deltona FL
ATC Site No. 412360
VZW Site No. 32932

LESSEE:

Verizon Wireless Personal Communications LP
d/b/a Verizon Wireless
a Delaware limited liability company

By: ATC Sequoia LLC,
a Delaware limited liability company
Its: Attorney-in-Fact

By:_____

Name:_____
Title:_____

Date:_____

Signed, sealed and delivered in the
Presence of:

_____

Print Name:_____

_____

Print Name:_____

STATE OF_____

COUNTY OF _____

The foregoing instrument was acknowledged before me this __day of_____, 2016 by _____, as_____of Verizon Wireless Personal Communications LP d/b/a Verizon Wireless, a Delaware limited liability company, the Attorney-in-Fact for ATC Sequoia LLC, a Delaware limited liability company. He/she is personally known to me or has provided_____as identification.

In Witness Whereof, I have hereunto signed this acknowledgment with said appearer and said witnesses on the date set forth above.

_____
Notary Public

_____
Printed, typed or stamped name of Notary
My commission number and expiration date:

[Seal]

Site Name: Deltona FL
ATC Site No. 412360
VZW Site No. 32932

EXHIBIT A

This Exhibit A may be replaced at Lessee's option as described below

PARENT PARCEL

Lessee shall have the right to replace this description with a description obtained from Owner's deed (or deeds) that include the land area encompassed by the Agreement and Lessee's improvements thereon

The Parent Parcel consists of the entire legal taxable lot owned by Owner as described in a deed (or deeds) to Owner of which the Property is a part thereof with such Parent Parcel being described below:

Being situated in the County of Volusia, State of Florida, and being known as
Volusia County APN: 8130-11-06-0010.

PROPERTY

Lessee shall have the right to replace this description with a description obtained from the Agreement or from a description obtained from an as-built survey conducted by Lessee.

16.00 FEET x 30.00 FEET LEASE AREA

lying within the following described parent tract:

All of Tract "F", Deltona Lakes Unit Eleven, according to the Plat thereof, as recorded in Plat Book 25, Pages 193 through 206 inclusive, of the Public Records of Volusia County, Florida.

being more particularly described as follows:

Begin at a ½" iron rod (#4596) located at the Northerly corner of a 16.00 feet x 30.00 feet area, said Point of Beginning lies 304.78 feet, measured at right angles Northerly of the Southerly line of said parent tract, and 278.60 feet, measured at right angles, Easterly of the Northerly extension of the Westerly line of said parent tract, which bears N 00°09'11" E, said Point of Beginning is further referenced as follows:

1. A 4"x 4" concrete monument located at the monumented point of curvature of said parent tract along the Westerly right of way line of Saxon Boulevard, and lying N 00°09'11" E, 79.00 feet from said Southeasterly corner of said parent tract, lies S 70°18'46" E, 675.25 feet from said Point of Beginning.

2. A 4"x 4" concrete monument located at the monumented intersection of the Southerly line of said parent tract and the Easterly right of way line of Daveport Drive, lies S 08°08'26" W, 307.64 feet from said Point of Beginning.

3. A 4"x 4" concrete monument located at the monumented point of tangency of said parent tract along the Westerly right of way line of Saxon Boulevard, and lying N 18°40'24" W, 364.66 feet from said reference point 1, lies N 77°11'39" E, 532.27 feet from said Point of Beginning.

Thence, leaving said Northerly corner and said Point of Beginning, run S 35°43'04" W, 30.00 feet to a ½" iron rod (#4596); Thence run S 54°16'56" E, 16.00 feet to a ½" iron rod (#4596); Thence run N 35°43'04" E, 30.00 feet to a ½" iron rod (#4596); Thence run N 54°16'56" W, 16.00 feet to the Point of Beginning. Containing 480 square feet or 0.01 acres more or less.

ACCESS AND UTILITIES

The access and utility easements include all easements of record as well those currently utilized by Lessee for ingress, egress and utility purposes from the Property to and from a public right of way including but not limited to:

10.00 FEET AND 20.00 FEET INGRESS\EGRESS EASEMENT

lying within the following described parent tract:

All of Tract "F", Deltona Lakes Unit Eleven, according to the Plat thereof, as recorded in Plat Book 25, Pages 193 through 206 inclusive, of the Public Records of Volusia County, Florida.

being more particularly described as follows:

Commence at a ½" iron rod (#4596) located at the Northerly corner of a 16.00 feet x 30.00 feet area, said Point of Commencement lies 304.78 feet, measured at right angles Northerly of the Southerly line of said parent tract, and 278.60 feet, measured at right angles, Easterly of the Northerly extension of the Westerly line of said parent tract, which bears N 00°09'11" E, said Point of Commencement is further referenced as follows:

1. A 4"x 4" concrete monument located at the monumented point of curvature of said parent tract along the Westerly right of way line of Saxon Boulevard, and lying N 00°09'11" E, 79.00 feet from said Southeasterly corner of said parent tract, lies S 70°18'46" E, 675.25 feet from said Point of Commencement.

2. A 4"x 4" concrete monument located at the monumented intersection of the Southerly line of said parent tract and the Easterly right of way line of Daveport Drive, lies S 08°08'26" W, 307.64 feet from said Point of Commencement.

3. A 4"x 4" concrete monument located at the monumented point of tangency of said parent tract along the Westerly right of way line of Saxon Boulevard, and lying N 18°40'24" W, 364.66 feet from said reference point 1, lies N 77°11'39" E, 532.27 feet from said Point of Commencement.

Thence, leaving said Northerly corner and said Point of Commencement, run S 35°43'04" W, 30.00 feet to a ½" iron rod (#4596); Thence run S 54°16'56" E, 16.00 feet to a ½" iron rod (#4596); Thence run N 35°43'04" E, 15.00 feet to the Point of Beginning of a 10.00 feet ingress\egress and utility easement, lying 5.00 feet on both sides of the following described centerline; Thence run S 54°16'56" E, 28.36 feet; Thence run N 35°43'04" E, 36.65 feet; Thence run N 38°21'51" E, 66.50 feet; Thence run N 15°43'40" E, 19.68 feet; Thence run N 41°12'56" E, 45.49 feet; Thence run N 57°10'39" E, 124.08 feet to the Point of Termination of said 10.00 feet wide easement and the Point of Beginning of a 20.00 feet ingress\egress and utility easement, lying 10.00 feet on both sides of the following described centerline; Thence run S 76°13'37" E, 72.96 feet; Thence run N 64°30'54" E, 97.59 feet; Thence run N 28°34'03" W, 80.97 feet; Thence run N 46°20'07" E, 48.12 feet to the Westerly right of way line of Saxon Boulevard, also being the Point of Termination of said 20.00 feet wide easement, lying N 25°45'20" W, 578.13 feet from said reference point 1. The sidelines of said easement are to be shortened or prolonged to meet at angle points and project boundary lines.

AND

20.00 FEET WIDE UTILITY EASEMENT "A"

lying within the following described parent tract:

All of Tract "F", Deltona Lakes Unit Eleven, according to the Plat thereof, as recorded in Plat Book 25, Pages 193 through 206 inclusive, of the Public Records of Volusia County, Florida.

lying 10.00 feet on both sides of the following described centerline:

Commence at a ½" iron rod (#4596) located at the Northerly corner of a 16.00 feet x 30.00 feet area, said Point of Commencement lies 304.78 feet, measured at right angles Northerly of the Southerly line of said parent tract, and 278.60 feet, measured at right angles, Easterly of the Northerly extension of the Westerly line of said parent tract, which bears N 00°09'11" E, said Point of Commencement is further referenced as follows:

1. A 4"x 4" concrete monument located at the monumented point of curvature of said parent tract along the Westerly right of way line of Saxon Boulevard, and lying N 00°09'11" E, 79.00 feet from said Southeasterly corner of said parent tract, lies S 70°18'46" E, 675.25 feet from said Point of Commencement.

2. A 4"x 4" concrete monument located at the monumented intersection of the Southerly line of said parent tract and the Easterly right of way line of Daveport Drive, lies S 08°08'26" W, 307.64 feet from said Point of Commencement.

3. A 4"x 4" concrete monument located at the monumented point of tangency of said parent tract along the Westerly right of way line of Saxon Boulevard, and lying N 18°40'24" W, 364.66 feet from said reference point 1, lies N 77°11'39" E, 532.27 feet from said Point of Commencement.

Thence, leaving said Northerly corner and said Point of Commencement, run S 35°43'04" W, 30.00 feet to a ½" iron rod (#4596); Thence run S 54°16'56" E, 16.00 feet to a ½" iron rod (#4596); Thence run N 35°43'04" E, 15.00 feet to the Point of Beginning of a 10.00 feet ingress\egress and utility easement, lying 5.00 feet on both sides of the following described centerline; Thence run S 54°16'56" E, 23.36 feet; Thence run N 35°43'04" E, 36.77 feet; Thence run N 38°21'51" E, 65.62 feet; Thence run N 15°43'40" E, 19.81 feet; Thence run N 41°12'56" E, 47.32 feet; Thence run N 57°10'39" E, 28.32 feet; Thence run S 32°49'21" E, 29.92 feet to the Point of Termination lying N 27°27'19" E, 445.78 feet from said reference point 2. The sidelines of said easement are to be shortened or prolonged to meet at angle points and project boundary lines.

AND

20.00 FEET WIDE UTILITY EASEMENT "B"

lying within the following described parent tract:

All of Tract "F", Deltona Lakes Unit Eleven, according to the Plat thereof, as recorded in Plat Book 25, Pages 193 through 206 inclusive, of the Public Records of Volusia County, Florida.

lying 10.00 feet on both sides of the following described centerline:

Commence at a ½" iron rod (#4596) located at the Northerly corner of a 16.00 feet x 30.00 feet area, said Point of Commencement lies 304.78 feet, measured at right angles Northerly of the Southerly line of said parent tract, and 278.60 feet, measured at right angles, Easterly of the Northerly extension of the Westerly line of said parent tract, whicl bears N 00°09'11" E, said Point of Commencement is further referenced as follows:

1. A 4"x 4" concrete monument located at the monumented point of curvature of said parent tract along the Westerly right of way line of Saxon Boulevard, and lying N 00°09'11" E, 79.00 feet from said Southeasterly corner of said parent tract, lies S 70°18'46" E, 675.25 feet from said Point of Commencement.

2. A 4"x 4" concrete monument located at the monumented intersection of the Southerly line of said parent tract and the Easterly right of way line of Daveport Drive, lies S 08°08'26" W, 307.64 feet from said Point of Commencement.

3. A 4"x 4" concrete monument located at the monumented point of tangency of said parent tract along the Westerly right of way line of Saxon Boulevard, and lying N 18°40'24" W, 364.66 feet from said reference point 1, lies N 77°11'39" E, 532.27 feet from said Point of Commencement.

Thence, leaving said Northerly corner and said Point of Commencement, run S 35°43'04" W, 30.00 feet to a ½" iron ro (#4596); Thence run S 54°16'56" E, 16.00 feet to a ½" iron rod (#4596); Thence run N 35°43'04" E, 15.00 feet to the Point of Beginning of a 10.00 feet ingress\egress and utility easement, lying 5.00 feet on both sides of the following described centerline; Thence run S 54°16'56" E, 23.36 feet; Thence run N 35°43'04" E, 36.77 feet; Thence run N 38°21'51" E, 65.62 feet; Thence run N 15°43'40" E, 19.81 feet; Thence run N 41°12'56" E, 47.32 feet; Thence run N 57°10'39" E, 55.42 feet; Thence run N 33°39'33" E, 285.54 feet to the Point of Termination being on the Westerly righ of way line of Saxon Boulevard and lying N 28°49'15" E, 768.22 feet from said reference point 2. The sidelines of said easement are to be shortened or prolonged to meet at angle points and project boundary lines.

04/25/2000 07:45
Instrument # 2000-068279
Book: 4543
Page: 762

AMENDMENT TO SITE AGREEMENT FOR LAND
Site No.: 081406-4

This Amendment to Lease Agreement "Amendment" is made this 17th day of ~~March~~ April, 2000, between the CITY OF DELTONA, a Florida municipality, ("Owner") and PRIMECO PERSONAL COMMUNICATIONS, LIMITED PARTNERSHIP, ("PrimeCo").

WHEREAS, Owner and PrimeCo entered into a Site Agreement for Land ("Agreement") on September 1, 1999, providing for the granting and licensing of certain property interests from Owner to PrimeCo; and

WHEREAS: The Parties now desire to amend the Agreement to increase the leased ground space and more particularly specify the same through exhibits attached hereto and made a part hereof.

NOW, THEREFORE, in consideration of the mutual covenants and conditions set forth herein, and other valuable consideration, the receipt and sufficiency of which is hereby acknowledged, the parties hereto agree as follows:

1. Paragraph 1 of the Agreement is amended to provide that the real property leased and granted by Owner to PrimeCo at the Project Site shall comprise approximately 480 square feet of land.

2. Exhibit B to the Agreement is deleted in its entirety and replaced by Amended Exhibit B attached hereto and made a part hereof.

3. Except as specifically amended herein, the remaining terms of the Agreement shall remain in full force and effect

IN WITNESS WHEREOF, the parties have caused this Amendment to be executed pursuant to due authority as of the day and year first written above.

Owner:
CITY OF DELTONA., a Florida municipality

By: John Masiarczyk
Name: JOHN MASIARCZYK
Title: Mayor
Date: 4-17-00
Witness: Faith G. Miller
Print Name: FAITH MILLER, City Clerk
Witness: Hope MacRonald
Print Name: Hope MacRonald

PrimeCo:
PrimeCo Personal Communications, Limited Partnership

By:
Name: Thomas J. Marler
Title: President - North Florida Region
Date: 4/3/00
Witness: Kathy Simone
Print Name: KATHY SIMONE
Witness: Amy A. Cochran
Print Name: Amy A Cochran

APPROVED 3-30-00
Associate General Counsel

Prepared by and return to:
City of Deltona/City Clerk
P.O. Box 5550
Deltona, FL 32728-5550

05-02-00A08:41 RCVD

SITE ID:81406-4
SITE NAME: City of Deltona

AMENDED EXHIBIT "B"

SKETCH AND DESCRIPTION OF THE PROJECT SITE: Legal description of property to be attached.

16.00 FEET x 30.00 FEET LEASE AREA

lying within the following described parent tract:

All of Tract "F", Deltona Lakes Unit Eleven, according to the Plat thereof, as recorded in Plat Book 25, Pages 193 through 206 inclusive, of the Public Records of Volusia County, Florida.

being more particularly described as follows:

Begin at a ½" iron rod (#4596) located at the Northerly corner of a 16.00 feet x 30.00 feet area, said Point of Beginning lies 304.78 feet, measured at right angles Northerly of the Southerly line of said parent tract, and 278.60 feet, measured at right angles, Easterly of the Northerly extension of the Westerly line of said parent tract, which bears N 00°09'11" E, said Point of Beginning is further referenced as follows:

1. A 4"x 4" concrete monument located at the monumented point of curvature of said parent tract along the Westerly right of way line of Saxon Boulevard, and lying N 00°09'11" E, 79.00 feet from said Southeasterly corner of said parent tract, lies S 70°18'46" E, 675.25 feet from said Point of Beginning.

2. A 4"x 4" concrete monument located at the monumented intersection of the Southerly line of said parent tract and the Easterly right of way line of Daveport Drive, lies S 08°08'26" W, 307.64 feet from said Point of Beginning.

3. A 4"x 4" concrete monument located at the monumented point of tangency of said parent tract along the Westerly right of way line of Saxon Boulevard, and lying N 18°40'24" W, 364.66 feet from said reference point 1, lies N 77°11'39" E, 532.27 feet from said Point of Beginning.

Thence, leaving said Northerly corner and said Point of Beginning, run S 35°43'04" W, 30.00 feet to a ½" iron rod (#4596); Thence run S 54°16'56" E, 16.00 feet to a ½" iron rod (#4596); Thence run N 35°43'04" E, 30.00 feet to a ½" iron rod (#4596); Thence run N 54°16'56" W, 16.00 feet to the Point of Beginning. Containing 480 square feet or 0.01 acres more or less.

Notes:

1. The instrument to which this exhibit is attached and into which instrument this exhibit is fully incorporated, may be modified and/or amended to establish, clarify or change the location of the nonexclusive easement for utility lines and cables by recording an instrument signed by PrimeCo and Owner in the public records of the County in which the Owner's Property is located, which instrument shall set forth the details of such modification and/or amendment.
2. Notwithstanding anything in the instrument which this exhibit is attached to the contrary, the parties may by joint written agreement replace and substitute for this exhibit a survey of the Project Site, showing non-exclusive easements for ingress, egress and utility lines and cables to service the Project Site and/or may replace and substitute for this exhibit construction drawings of the PrimeCo Facilities of the Project Site.
3. Setback of the PrimeCo Facilities from the boundaries of Owner's Property and of the Project Site shall be the distance required by the applicable governmental authorities.
4. Width of any access road or easement granted to or used by PrimeCo, shall be the width required by the applicable governmental authorities, including police and fire departments but in no event less than ten feet (10') except if prohibited by governmental authorities having jurisdiction over the Owner's Property, the Project Site and/or the PrimeCo Facilities.

SITE ID:81406-4
SITE NAME: City of Deltona

AMENDED EXHIBIT "B"

10.00 FEET AND 20.00 FEET INGRESS\EGRESS EASEMENT

lying within the following described parent tract:

All of Tract "F", Deltona Lakes Unit Eleven, according to the Plat thereof, as recorded in Plat Book 25, Pages 193 through 206 inclusive, of the Public Records of Volusia County, Florida.

being more particularly described as follows:

Commence at a ½" iron rod (#4596) located at the Northerly corner of a 16.00 feet x 30.00 feet area, said Point of Commencement lies 304.78 feet, measured at right angles Northerly of the Southerly line of said parent tract, and 278.60 feet, measured at right angles, Easterly of the Northerly extension of the Westerly line of said parent tract, which bears N 00°09'11" E, said Point of Commencement is further referenced as follows:

1. A 4"x 4" concrete monument located at the monumented point of curvature of said parent tract along the Westerly right of way line of Saxon Boulevard, and lying N 00°09'11" E, 79.00 feet from said Southeasterly corner of said parent tract, lies S 70°18'46" E, 675.25 feet from said Point of Commencement.

2. A 4"x 4" concrete monument located at the monumented intersection of the Southerly line of said parent tract and the Easterly right of way line of Daveport Drive, lies S 08°08'26" W, 307.64 feet from said Point of Commencement.

3. A 4"x 4" concrete monument located at the monumented point of tangency of said parent tract along the Westerly right of way line of Saxon Boulevard, and lying N 18°40'24" W, 364.66 feet from said reference point 1, lies N 77°11'39" E, 532.27 feet from said Point of Commencement.

Thence, leaving said Northerly corner and said Point of Commencement, run S 35°43'04" W, 30.00 feet to a ½" iron rod (#4596); Thence run S 54°16'56" E, 16.00 feet to a ½" iron rod (#4596); Thence run N 35°43'04" E, 15.00 feet to the Point of Beginning of a 10.00 feet ingress\egress and utility easement, lying 5.00 feet on both sides of the following described centerline; Thence run S 54°16'56" E, 28.36 feet; Thence run N 35°43'04" E, 36.65 feet; Thence run N 38°21'51" E, 66.50 feet; Thence run N 15°43'40" E, 19.68 feet; Thence run N 41°12'56" E, 45.49 feet; Thence run N 57°10'39" E, 124.08 feet to the Point of Termination of said 10.00 feet wide easement and the Point of Beginning of a 20.00 feet ingress\egress and utility easement, lying 10.00 feet on both sides of the following described centerline; Thence run S 76°13'37" E, 72.96 feet; Thence run N 64°30'54" E, 97.59 feet; Thence run N 28°34'03" W, 80.97 feet; Thence run N 46°20'07" E, 48.12 feet to the Westerly right of way line of Saxon Boulevard, also being the Point of Termination of said 20.00 feet wide easement, lying N 25°45'20" W, 578.13 feet from said reference point 1. The sidelines of said easement are to be shortened or prolonged to meet at angle points and project boundary lines.

Notes:

1. The instrument to which this exhibit is attached and into which instrument this exhibit is fully incorporated, may be modified and/or amended to establish, clarify or change the location of the nonexclusive easement for utility lines and cables by recording an instrument signed by PrimeCo and Owner in the public records of the County in which the Owner's Property is located, which instrument shall set forth the details of such modification and/or amendment.
2. Notwithstanding anything in the instrument which this exhibit is attached to the contrary, the parties may by joint written agreement replace and substitute for this exhibit a survey of the Project Site, showing non-exclusive easements for ingress, egress and utility lines and cables to service the Project Site and/or may replace and substitute for this exhibit construction drawings of the PrimeCo Facilities of the Project Site.
3. Setback of the PrimeCo Facilities from the boundaries of Owner's Property and of the Project Site shall be the distance required by the applicable governmental authorities.
4. Width of any access road or easement granted to or used by PrimeCo, shall be the width required by the applicable governmental authorities, including police and fire departments but in no event less than ten feet (10') except if prohibited by governmental authorities having jurisdiction over the Owner's Property, the Project Site and/or the PrimeCo Facilities.

SITE ID:81406-4
SITE NAME: City of Deltona

20.00 FEET WIDE UTILITY EASEMENT "A"

lying within the following described parent tract:

All of Tract "F", Deltona Lakes Unit Eleven, according to the Plat thereof, as recorded in Plat Book 25, Pages 193 through 206 inclusive, of the Public Records of Volusia County, Florida.

lying 10.00 feet on both sides of the following described centerline:

Commence at a ½" iron rod (#4596) located at the Northerly corner of a 16.00 feet x 30.00 feet area, said Point of Commencement lies 304.78 feet, measured at right angles Northerly of the Southerly line of said parent tract, and 278.60 feet, measured at right angles, Easterly of the Northerly extension of the Westerly line of said parent tract, which bears N 00°09'11" E, said Point of Commencement is further referenced as follows:

1. A 4"x 4" concrete monument located at the monumented point of curvature of said parent tract along the Westerly right of way line of Saxon Boulevard, and lying N 00°09'11" E, 79.00 feet from said Southeasterly corner of said parent tract, lies S 70°18'46" E, 675.25 feet from said Point of Commencement.

2. A 4"x 4" concrete monument located at the monumented intersection of the Southerly line of said parent tract and the Easterly right of way line of Daveport Drive, lies S 08°08'26" W, 307.64 feet from said Point of Commencement.

3. A 4"x 4" concrete monument located at the monumented point of tangency of said parent tract along the Westerly right of way line of Saxon Boulevard, and lying N 18°40'24" W, 364.66 feet from said reference point 1, lies N 77°11'39" E, 532.27 feet from said Point of Commencement.

Thence, leaving said Northerly corner and said Point of Commencement, run S 35°43'04" W, 30.00 feet to a ½" iron rod (#4596); Thence run S 54°16'56" E, 16.00 feet to a ½" iron rod (#4596); Thence run N 35°43'04" E, 15.00 feet to the Point of Beginning of a 10.00 feet ingress\egress and utility easement, lying 5.00 feet on both sides of the following described centerline; Thence run S 54°16'56" E, 23.36 feet; Thence run N 35°43'04" E, 36.77 feet; Thence run N 38°21'51" E, 65.62 feet; Thence run N 15°43'40" E, 19.81 feet; Thence run N 41°12'56" E, 47.32 feet; Thence run N 57°10'39" E, 28.32 feet; Thence run S 32°49'21" E, 29.92 feet to the Point of Termination lying N 27°27'19" E, 445.78 feet from said reference point 2. The sidelines of said easement are to be shortened or prolonged to meet at angle points and project boundary lines.

Notes:

1. The instrument to which this exhibit is attached and into which instrument this exhibit is fully incorporated, may be modified and/or amended to establish, clarify or change the location of the nonexclusive easement for utility lines and cables by recording an instrument signed by PrimeCo and Owner in the public records of the County in which the Owner's Property is located, which instrument shall set forth the details of such modification and/or amendment.
2. Notwithstanding anything in the instrument which this exhibit is attached to the contrary, the parties may by joint written agreement replace and substitute for this exhibit a survey of the Project Site, showing non-exclusive easements for ingress, egress and utility lines and cables to service the Project Site and/or may replace and substitute for this exhibit construction drawings of the PrimeCo Facilities of the Project Site.
3. Setback of the PrimeCo Facilities from the boundaries of Owner's Property and of the Project Site shall be the distance required by the applicable governmental authorities.
4. Width of any access road or easement granted to or used by PrimeCo, shall be the width required by the applicable governmental authorities, including police and fire departments but in no event less than ten feet (10') except if prohibited by governmental authorities having jurisdiction over the Owner's Property, the Project Site and/or the PrimeCo Facilities.

SITE ID:81406-4
SITE NAME: City of Deltona

20.00 FEET WIDE UTILITY EASEMENT "B"

lying within the following described parent tract:

All of Tract "F", Deltona Lakes Unit Eleven, according to the Plat thereof, as recorded in Plat Book 25, Pages 193 through 206 inclusive, of the Public Records of Volusia County, Florida.

lying 10.00 feet on both sides of the following described centerline:

Commence at a ½" iron rod (#4596) located at the Northerly corner of a 16.00 feet x 30.00 feet area, said Point of Commencement lies 304.78 feet, measured at right angles Northerly of the Southerly line of said parent tract, and 278.60 feet, measured at right angles, Easterly of the Northerly extension of the Westerly line of said parent tract, which bears N 00°09'11" E, said Point of Commencement is further referenced as follows:

1. A 4"x 4" concrete monument located at the monumented point of curvature of said parent tract along the Westerly right of way line of Saxon Boulevard, and lying N 00°09'11" E, 79.00 feet from said Southeasterly corner of said parent tract, lies S 70°18'46" E, 675.25 feet from said Point of Commencement.

2. A 4"x 4" concrete monument located at the monumented intersection of the Southerly line of said parent tract and the Easterly right of way line of Daveport Drive, lies S 08°08'26" W, 307.64 feet from said Point of Commencement.

3. A 4"x 4" concrete monument located at the monumented point of tangency of said parent tract along the Westerly right of way line of Saxon Boulevard, and lying N 18°40'24" W, 364.66 feet from said reference point 1, lies N 77°11'39" E, 532.27 feet from said Point of Commencement.

Thence, leaving said Northerly corner and said Point of Commencement, run S 35°43'04" W, 30.00 feet to a ½" iron rod (#4596); Thence run S 54°16'56" E, 16.00 feet to a ½" iron rod (#4596); Thence run N 35°43'04" E, 15.00 feet to the Point of Beginning of a 10.00 feet ingress\egress and utility easement, lying 5.00 feet on both sides of the following described centerline; Thence run S 54°16'56" E, 23.36 feet; Thence run N 35°43'04" E, 36.77 feet; Thence run N 38°21'51" E, 65.62 feet; Thence run N 15°43'40" E, 19.81 feet; Thence run N 41°12'56" E, 47.32 feet; Thence run N 57°10'39" E, 55.42 feet; Thence run N 33°39'33" E, 285.54 feet to the Point of Termination being on the Westerly right of way line of Saxon Boulevard and lying N 28°49'15" E, 768.22 feet from said reference point 2. The sidelines of said easement are to be shortened or prolonged to meet at angle points and project boundary lines.

Notes:

1. The instrument to which this exhibit is attached and into which instrument this exhibit is fully incorporated, may be modified and/or amended to establish, clarify or change the location of the nonexclusive easement for utility lines and cables by recording an instrument signed by PrimeCo and Owner in the public records of the County in which the Owner's Property is located, which instrument shall set forth the details of such modification and/or amendment.
2. Notwithstanding anything in the instrument which this exhibit is attached to the contrary, the parties may by joint written agreement replace and substitute for this exhibit a survey of the Project Site, showing non-exclusive easements for ingress, egress and utility lines and cables to service the Project Site and/or may replace and substitute for this exhibit construction drawings of the PrimeCo Facilities of the Project Site.
3. Setback of the PrimeCo Facilities from the boundaries of Owner's Property and of the Project Site shall be the distance required by the applicable governmental authorities.
4. Width of any access road or easement granted to or used by PrimeCo, shall be the width required by the applicable governmental authorities, including police and fire departments but in no event less than ten feet (10') except if prohibited by governmental authorities having jurisdiction over the Owner's Property, the Project Site and/or the PrimeCo Facilities.

Book: 4543
Page: 787
Diane M. Matousek
Volusia County, Clerk of Court

SITE ID:81406-4
SITE NAME: City of Deltona

AMENDED EXHIBIT "B"
Page 5 of 5

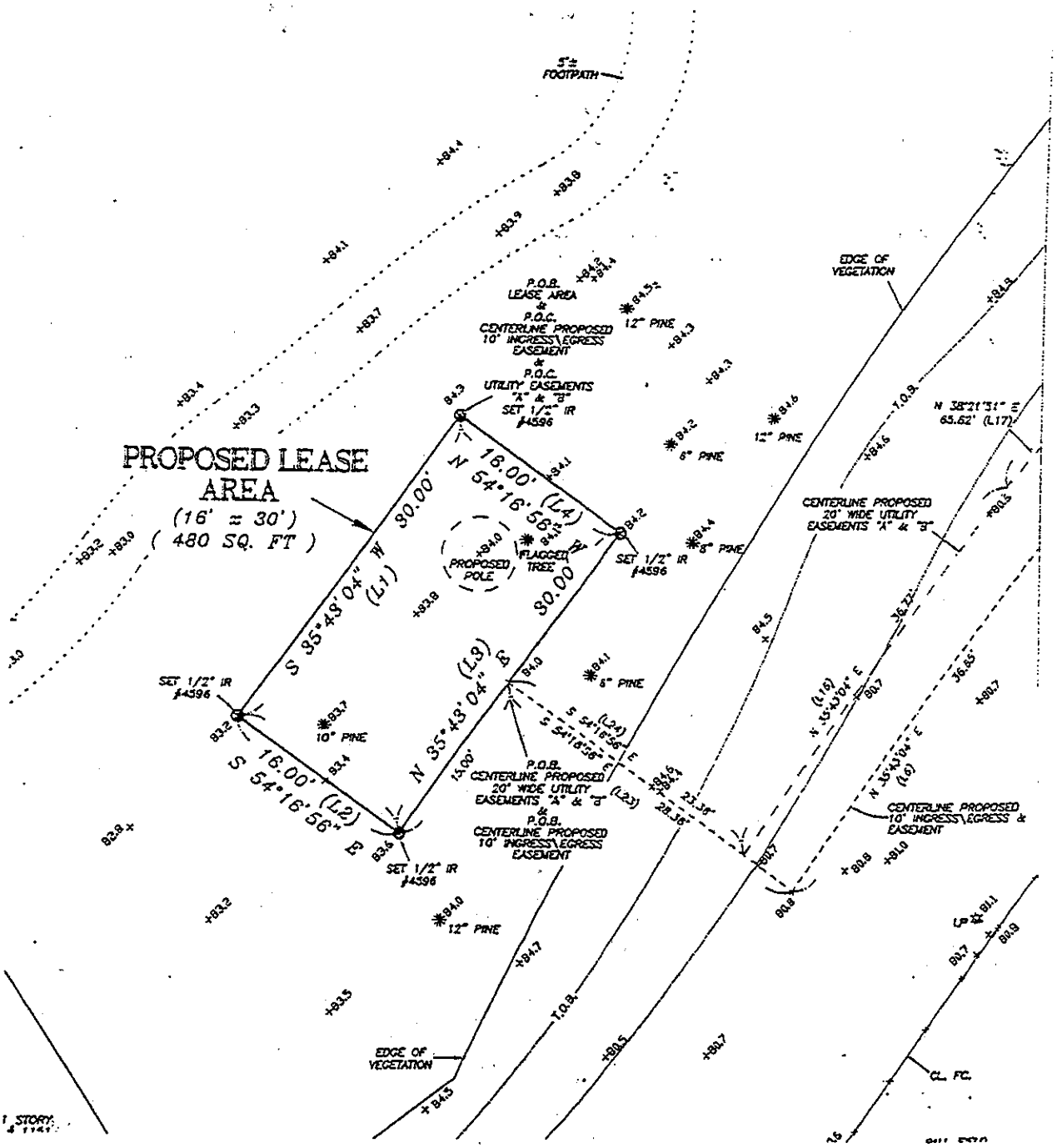

Notes:

1. The instrument to which this exhibit is attached and into which instrument this exhibit is fully incorporated, may be modified and/or amended to establish, clarify or change the location of the nonexclusive easement for utility lines and cables by recording an instrument signed by PrimeCo and Owner in the public records of the County in which the Owner's Property is located, which instrument shall set forth the details of such modification and/or amendment.
2. Notwithstanding anything in the instrument which this exhibit is attached to the contrary, the parties may by joint written agreement replace and substitute for this exhibit a survey of the Project Site, showing non-exclusive easements for ingress, egress and utility lines and cables to service the Project Site and/or may replace and substitute for this exhibit construction drawings of the PrimeCo Facilities of the Project Site.
3. Setback of the PrimeCo Facilities from the boundaries of Owner's Property and of the Project Site shall be the distance required by the applicable governmental authorities.
4. Width of any access road or easement granted to or used by PrimeCo, shall be the width required by the applicable governmental authorities, including police and fire departments but in no event less than ten feet (10') except if prohibited by governmental authorities having jurisdiction over the Owner's Property, the Project Site and/or the PrimeCo Facilities.

Tanya Cross
Corporate Accounts Coordinator
PrimeCo Personal Communications
Suite 400
100 Tampa Oaks
Temple Terrace, FL 33637

Telephone: (813) 615-4854
Fax: (813) 615-4902

PRIMECO
PERSONAL COMMUNICATIONS

Wednesday, November 24, 1999
VIA: General Delivery

John Masiarczyk, Mayor
City of Deltona
800 Deltona Blvd., Second Floor
Deltona, FL 32725

RE: 81406-4 Dewey O'Booster

Dear Mr. John Masiarczyk

Enclosed please find one (1) copy of the recorded Memorandum of Site Agreement For Land/Lease for the above site for your records.

Should you have any questions and/or need my assistance, please do not hesitate to contact me at (813) 615-4854.

Sincerely,

Tanya L. Cross

Tanya L. Cross, *Property Administrator*
PrimeCo Personal Communications, Limited Partnership
North Florida Region

Enclosure (s)

cc: Emily Merlin, Paralegal (original forwarded)
Central Files

11/10/1999 08:55
Instrument # 99222263
Book: 4493
Page: 2354

THIS INSTRUMENT PREPARED
BY AND RETURN TO:
PrimeCo Legal Review

81406-4 Dewey O'Booster

MEMORANDUM OF SITE AGREEMENT FOR LAND/LEASE

THIS MEMORANDUM OF SITE AGREEMENT FOR LAND/LEASE ("Memorandum") is made and entered into by and between City of Deltona, with an address of 800 Deltona Blvd., Second Floor, Deltona, FL 32725 as **"Owner"**, and PrimeCo Personal Communications, Limited Partnership, a Delaware limited partnership, registered to do business in the State of Florida, and whose address is 100 Tampa Oaks Blvd., Ste. 450, Temple Terrace, Fl 33637, **"PrimeCo"**.

1. **PREMISES.** Owner and PrimeCo have entered into a Site Agreement for Land dated as of Sept. 20, 1999, (together with any amendments and modifications thereto, the **"Site Agreement"**), whereby Owner has leased and PrimeCo has hired those certain premises in Volusia County, Florida, consisting of, among other things, approximately 300 square feet of land, as depicted and legally described on **Exhibit "A"** attached hereto and hereby incorporated into this Memorandum and certain easements (the **"Project Site"**).

2. **TERM.** The initial term of the Site Agreement shall be a period of five (5) and a fraction years commencing as of the **"Commencement Date"**, as defined herein below, and terminating on the 31st day of December following the fifth (5th) annual anniversary of the Commencement Date unless otherwise terminated as provided in the Site Agreement **("Initial Term")**.

3. **RENEWAL OPTIONS.** In addition to the Initial Term and on and subject to the terms of the Site Agreement, the Site Agreement term may be automatically extended for two (2) consecutive periods of five (5) years each. Each such extension shall be known hereinafter as a "Renewal Term". Hereinafter, the Initial Term, together with any and all Renewal Terms, shall be known as the "Term" of the Site Agreement.

4. **COMMENCEMENT.** The **"Commencement Date"** is the date on which PrimeCo begins construction of the PrimeCo Facilities (as defined in the Site Agreement). Accordingly, unless otherwise specifically stated here:_____, the Commencement Date shall be the date of PrimeCo's filing of a Notice of Commencement in the public records of the county in which the Project Site is located.

5. **LEASE INCORPORATED.** All of the terms, conditions, provisions and covenants of the Site Agreement are hereby incorporated herein as if fully set forth in this Memorandum. To the extent that any of the terms hereof are inconsistent with the terms of the Site Agreement, the terms of the Site Agreement shall control. In the event that an inspection of or reference to the full terms, conditions, provisions or covenants of the Site Agreement is desired or necessary, a request for such inspection should be made to the Owner at the address set forth above, stating the name and address of the person and/or entity requesting the inspection, and setting forth the reason for the inspection. The Owner may permit or refuse such inspection in its sole and absolute discretion.

SITE ID:
SITE NAME: City of Deltona

BOOK: 4493
PAGE: 2355

IN WITNESS WHEREOF, Owner and PrimeCo have executed this Memorandum as of the date and year set forth below their respective signatures.

Signed, sealed and delivered
in the presence of:

Witnesses:

1. Hope MacDonald
Print Name: Hope MacDonald

2. Mary K. Mullins
Print Name: Mary K. Mullins

Address of Owner:

Telephone No.: 407-860-7160
Facsimile No.: 407-860-7167
Federal ID No.: 59-3348668

OWNER:

City of Deltona

By: John Masiarczyk
JOHN MASIARCZYK, Mayor

Date: 9-20-99

Attest: Faith C. Miller
FAITH MILLER, City Clerk

[Corporate Seal]

Date: 9-20-99

Witnesses:

1. Kathy Simone
Print Name: KATHY SIMONE

2. Travis J. Gorrell
Print Name: TRAVIS J. GORRELL

PrimeCo Personal Communications a Limited Partnership

By: T. J. Marler

Its: Thomas J. Marler

Date: 9/1/99

STATE OF FLORIDA
COUNTY OF Volusia

The foregoing instrument was acknowledged before me this 20th day of September, 1999, by John Masiarczyk **[name of person]**, as Mayor **[title of person]**, of City of Deltona **[name of entity]**. He/she is ✓ personally known to me *or* ____ has produced _____ as identification.

Robin K. Tucker
Robin K. Tucker
(type or print name) Notary Public-State of Florida

[Seal]

STATE OF FLORIDA NOTARY PUBLIC
ROBIN K. TUCKER
My Comm Exp. 6/30/2003
No. CC 850875
[ ] Personally Known [ ] Other I.D.

My commission expires:

SITE ID:
SITE NAME: City of Deltona

Book: 4493
Page: 2356

STATE OF FLORIDA
COUNTY OF Hillsborough

The foregoing instrument was acknowledged before me this 1 day of September, 1999, by Thomas J. Marler, as GM/N. Florida region, of **PrimeCo Personal Communications Limited Partnership**, a Delaware limited partnership. He is, __ personally known to me *or* __ has produced _____ as identification.

Kathleen M. Winkler
MY COMMISSION # CC810432 EXPIRES
February 18, 2003
BONDED THRU TROY FAIN INSURANCE, INC.

Kathleen M Winkler

(type or print name) Notary Public-State of Florida

[Seal]

My commission expires:

Book: 4493
Page: 2358

EXHIBIT "A"

Location of PrimeCo Leased Site
Page 2 of 3

Site located within the following parent tract parcel:

10.00 FEET AND 20.00 FEET INGRESS\EGRESS & UTILITY EASEMENT

All of Tract "F", Deltona Lakes Unit Eleven, according to the Plat thereof, as recorded in Plat Book 25, Pages 193 through 206 inclusive, of the Public Records of Volusia County, Florida.

being more particularly described as follows:

Commence at a ½" iron rod (#4596) located at the Northerly corner of a 10.00 feet x 30.00 feet area, said Point of Commencement lies 293.69 feet, measured at right angles Northerly of the Southerly line of said parent tract, and 331.35 feet, measured at right angles, Easterly of the Westerly line of said parent tract, said Point of Commencement is further referenced as follows:

1. A 4"x 4" concrete monument located at the monumented point of curvature of said parent tract along the Westerly right of way line of Saxon Boulevard, and lying N 00°09'11" E, 79.00 feet from said Southeasterly corner of said parent tract, lies S 69°39'04" E, 621.87 feet from said Point of Commencement.

2. A 4"x 4" concrete monument located at the monumented intersection of the Southerly line of said parent tract and the Easterly right of way line of Daveport Drive, lies S 18°10'23" W, 308.71 feet from said Point of Commencement.

3. A 4"x 4" concrete monument located at the monumented point of tangency of said parent tract along the Westerly right of way line of Saxon Boulevard, and lying N 18°40'24" W, 364.66 feet from said reference point 1, lies N 74°30'43" E, 483.88 feet from said Point of Commencement.

Thence, leaving said Northerly corner and said Point of Commencement, run S 35°43'04" W, 30.00 feet to a ½" iron rod (#4596); Thence run N 54°16'56" W, 5.00 feet to the Point of Beginning of a 10.00 feet ingress\egress and utility easement, lying 5.00 feet on both sides of the following described centerline; Thence run N 35°43'04" E, 30.00 feet; Thence run N 38°21'51" E, 66.50 feet; Thence run N 15°43'40" E, 19.68 feet; Thence run N 41°12'56" E, 45.49 feet; Thence run N 57°10'39" E, 124.08 feet to the Point of Termination of said 10.00 feet wide easement and the Point of Beginning of a 20.00 feet ingress\egress and utility easement, lying 10.00 feet on both sides of the following described centerline; Thence run S 76°13'37" E, 72.96 feet; Thence run N 64°30'54" E, 97.59 feet; Thence run N 28°34'03" W, 80.97 feet; Thence run N 46°20'07" E, 48.12 feet to the Westerly right of way line of Saxon Boulevard, alos being the Point of Termination of said 20.00 feet wide easement, lying N 25°45'20" W, 578.13 feet from said reference point 1. The sidelines of said easement are to be shortened or prolonged to meet at angle points and project boundary lines.

Please Initial

Book: 4493
Page: 2359
Diane M. Matousek
Volusia County, Clerk of Court

EXHIBIT "A"

Location of PrimeCo Leased Site
Page 3 of 3

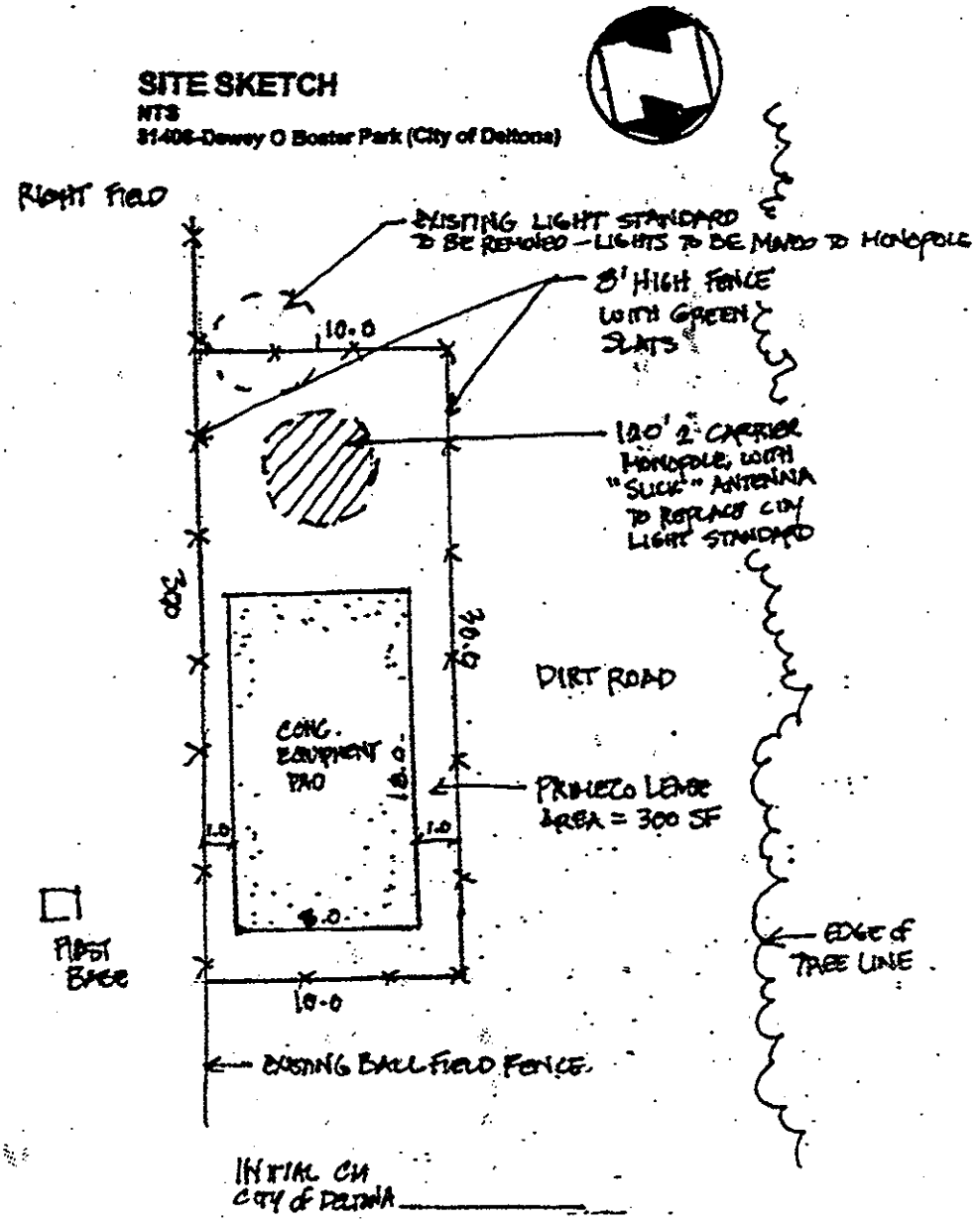

INITIAL CH
CITY of DELTONA _____

Please Initial _____

City of Deltona

2345 Providence Blvd.
Deltona, FL 32725

Agenda Memo

AGENDA ITEM: B.

TO: Mayor and Commission **AGENDA DATE:** 12/12/2016

FROM: Jane K. Shang, City Manager **AGENDA ITEM:** 11 - B

SUBJECT:
Request for approval of First Amendment with T-Mobile South, LLC for Land and Co-Location on Tower located at Fire Station 63. CityScape, cell tower consultants. Jane K. Shang, City Manager (386) 878-8850.

Strategic Goal: Fiscal Issues

LOCATION:
Fire Station 63

BACKGROUND:
This is an extension of the site agreement for land and co-location with T-Mobile for the cell tower located at Fire Station 63 at 2147 Howland Boulevard near Dupont Lakes. This cell tower provides cell tower services to residents and businesses in the areas near the tower. The extension provides annual revenue to the City in the amount of $22,812, with four (4) additional five (5) year renewal terms. Each year of the renewal term results in an increase in rent of three percent (3%) over the rent paid for the previous year. This extension was negotiated by the City's cell tower consultant, CityScape. A representative of CityScape will be at the meeting to discuss the extension and answer any questions anyone has regarding this agreement.

COST:
N/A

SOURCE OF FUNDS:
N/A

ORIGINATING DEPARTMENT:
City Manager's Department, Jane K. Shang, (386) 878-8850

STAFF RECOMMENDATION PRESENTED BY:
Jane K. Shang, City Manager, "Staff recommend the City to approve the First Amendment to Site Agreement for Land and Co-Location on Tower with T-Mobile as negotiated by CityScape, the City's Cell Tower Consultants."

POTENTIAL MOTION:
"Move to approve the First Amendment for Site for Land and Co-Location on Tower with T-Mobile."

powered by Legistar™

Tenant Site Name: T-Mobile South LLC
Tenant Site No: A2A0435A/Sprint/USA
Site Address: 2147 Howland Blvd, Deltona, FL

FIRST AMENDMENT TO SITE AGREEMENT FOR LAND AND CO-LOCATION ON TOWER

This First Amendment to Site Agreement for Land and Co-Location on Tower (this "Amendment"), effective as of the later of the signature dates below (the "Effective Date"), is by and between the City of Deltona, a municipal corporation, with its offices located at 2345 Providence Boulevard, Deltona, FL 32725 ("Owner"), and T-Mobile South LLC, a Delaware limited liability company, successor in interest to VoiceStream Tampa/Orlando, Inc., with an office located at 12920 SE 38th Street, Bellevue, WA 98006 ("Tenant").

WHEREAS, Owner and Tenant's predecessor, entered into a Site Agreement for Land and Co-location on Tower Agreement on April 17, 2001 (the "Agreement"), whereby Voicestream leased from Owner a portion of real property the "Premises" and space on the tower (known as the "VoiceStream Facilities") at 2147 Howland Boulevard, Deltona, as more fully described in the Agreement;

WHEREAS, the Agreement has an initial term and renewal terms that will expire on June 4, 2016 ("Existing Term"), and Owner and Tenant desire to enter into this Amendment in order to amend the Agreement to, among other things, provide for additional renewal terms beyond the Existing Term.

NOW, THEREFORE, for good and valuable consideration, the receipt and sufficiency of which are hereby acknowledged, Owner and Tenant agree as follows:

1. Recitals. The foregoing recitals are true and correct in all respects and are hereby made a part of this Amendment for all purposes.

2. Defined Terms. Any capitalized terms not defined herein shall have the meanings ascribed to them in the Agreement. Any references to "VoiceStream" in the Agreement shall be deleted and replaced by "Tenant."

3. Initial Term Commencement Date. The parties hereby ratify and affirm that the commencement date for the Initial Term of the Agreement was June 5, 2001.

4. Renewal. Tenant shall have the right to extend the term of the Agreement for four (4) successive five (5) year periods (each, a "New Renewal Term") initially commencing on June 4, 2016 (the "New Commencement Date"), on the same terms and conditions as set forth herein.

5. Rent. The parties agree to modify Paragraphs 3.A and 3.B of the Agreement as follows:

   A. Effective as of January 1, 2017, the annual rent shall be adjusted to Twenty-Two Thousand Eight Hundred Twelve and 00/100 Dollars ($22,812.00) ("Rent"), which shall be payable in equal monthly installments of One Thousand Nine

Hundred One and 00/100 Dollars ($1,901.00), and monthly thereafter. Tenant represents to Owner that Rent currently is exempt from sales tax. If Rent is subject to sales tax in the future, Tenant shall either remit such tax to Owner along with Tenant's payments of Rent or, if permitted by the tent applicable rules and regulations of the taxing authority, pay such tax directly to the taxing authority.

B. On each anniversary of the New Commencement Date during the New Renewal Terms, the annual Rent shall increase by three percent (3%) over the Rent paid for the previous year.

6. Representations and Warranties of Owner. Owner represents and warrants to Tenant that Owner is duly authorized and has the full power, right and authority to enter into this Amendment and to perform all of the Owner's obligations under this Amendment and the undersigned has full authority to execute and deliver this Amendment to Tenant.

7. Notice. For purposes of this Paragraph, addresses provided for Owner and Tenant as provided in the signature section of the Agreement shall be amended as follows:

Owner:	City of Deltona 2345 Providence Boulevard Deltona, FL 32725 (386)878-8874 Tel. (386)878-8871 Fax
With Copy to:	Gretchen R.H. Vose, City Attorney 2345 Providence Blvd. Deltona, FL 32725
Tenant:	T-Mobile USA, Inc. 12920 S.E. 38th Street Bellevue, WA 98006 Attn: Lease Compliance / A2A0435A

8. Construction of Documents. Each party hereto acknowledges that this Amendment shall not be construed in favor of or against the drafter hereof.

9. Remainder of Agreement Unaffected. In all other respects, the remainder of the Agreement shall remain in full force and effect. Any portion of the Agreement that is inconsistent with this Amendment is hereby amended to be consistent.

10. Headings. The headings contained in this Amendment are for reference purposes only and shall not modify or affect this Amendment in any manner whatsoever.

11. Counterparts. This Amendment may be executed in counterparts, all of which together shall constitute one agreement binding on all the parties hereto,

notwithstanding that all such parties are not signatories to the original or same counterpart.

12. Entire Agreement. The Agreement (as amended by this Amendment) embodies the final, entire agreement between the parties with respect to the subject matter of this Amendment, and supersedes any and all prior agreements, representations, understandings and commitments, whether oral or written relating to this subject matter, and may not be contradicted or varied by evidence of prior, contemporaneous or subsequent oral agreements or discussions of or on behalf of the parties to this Amendment. All provisions of the Agreement not amended hereby shall remain in full force and effect, and shall remain binding on the parties hereto. The Agreement and Amendment contain all agreements, promises or understandings between Owner and Tenant, and no verbal or oral agreements, promises or understandings shall be binding upon either the Owner or Tenant in any dispute, controversy or proceeding at law, and any addition, variation or modification to the Agreement and/or this Amendment shall be void and ineffective unless made in writing and signed by the parties. In the event any provision of the Agreement and/or this Amendment is found to be invalid or unenforceable, such a finding shall not affect the validity and/or enforceability of the remaining provisions of the Agreement and/or this Amendment.

(REST OF PAGE INTENTIONALLY LEFT BLANK;
SIGNATURES TO FOLLOW ON NEXT PAGE)

IN WITNESS WHEREOF, the parties have caused their properly authorized representatives to execute this Amendment on the dates set forth below.

OWNER: CITY OF DELTONA

Witness: _____ By: _____

Print Name:_____ City Manager

Witness: _____ Attest: _____

Print Name: _____ City Clerk

Date: _____

STATE OF FLORIDA
COUNTY OF VOLUSIA

The foregoing First Amendment to Site Agreement for Land and Co-Location on Tower Agreement was acknowledged before me this ____ day of _____, 2016, by _____, City Manager of City of Deltona, for and on behalf of said entity and for the purposes, intents and consideration stated in the foregoing First Amendment to Agreement, and is personally known to me or has produced _____ as identification. In witness whereof, I have hereunto signed this acknowledgement with said appearer and said witnesses, on the date set forth above.

_____

Signature of Notary Public

Printed Name: _____

[Seal] My Commission Expires: _____

TENANT:

T-MOBILE SOUTH LLC

Witness: _____ By: _____

Print Name: _____ Print Name: Jess Louk

Title: Director, Network Eng. & Ops.

Witness: _____ Date: _____

Print Name: _____

STATE OF FLORIDA
COUNTY OF HILLSBOROUGH

The foregoing First Amendment to Site Agreement for Land and Co-Location on Tower Agreement was acknowledged before me this ____ day of _____, 2016, by Jess Louk, as the Director, Network Engineering & Operations, of T-Mobile South LLC, for and on behalf of said entity and for the purposes, intents and consideration stated in the foregoing First Amendment to Site Agreement for Land and Co-Location on Tower Agreement, and is personally known to me or has produced _____ as identification. In witness whereof, I have hereunto signed this acknowledgement with said appearer and said witnesses, on the date set forth above.

_____

Signature of Notary Public

Printed Name: _____

[Seal] My Commission Expires: _____

Book: 4673
Page: 595

SITE ID: A2A435-A
SITE NAME: Deltona NE

05/22/2001 07:05
Instrument # 2001-102156
Book: 4687
Page: 4493

SITE AGREEMENT FOR LAND AND CO-LOCATION ON TOWER

This Site Agreement For Land ("Agreement") entered into as of the 17th day of Apr. 1, 2001, by and between the City of Deltona ("Owner"), whose address is 800 Deltona Blvd , Second Floor, Deltona, FL 32725, and VoiceStream Tampa/Orlando, Inc , a Delaware corporation, whose address is 12920 SE 38th Street, Bellevue, WA 98006, (hereinafter referred to as "VoiceStream"), provides for the granting and leasing of certain property interests on the following terms:

For good and valuable consideration, the receipt and sufficiency of which is hereby acknowledged and agreed, the parties hereto agree as follows:

1. PROPERTY The property interests hereby leased and granted by Owner (individually and collectively, the "Project Site") shall include the following:

[X] Non-exclusive lease of real property comprised of approximately 252 square feet of land ("Premises");
[X] Non-exclusive easements required to run, maintain and operate utility lines and cables on and to the Premises; and
[X] Non-exclusive easement across Owners Property (hereinafter defined) for access, ingress and egress to the Premises

IN OR UPON THE Owner's real property ("the Owner's Property"), located at 2147 Howland Blvd., Deltona, in the County of Volusia, and legally described on Exhibit "A" attached hereto, which Owner's Property is subject to Voice Stream's interest in the Project Site as set forth in this Agreement The Project Site is depicted and legally described on said Exhibit "B", attached hereto. All improvements made to the Project Site pursuant to this Agreement shall be known hereafter as the "VoiceStream Facilities"

2. TERM. The term of this Agreement shall be five (5) years (the "Initial Term"), commencing on the date VoiceStream begins construction of the VoiceStream facilities ("Commencement Date"), and terminating on the fifth anniversary of the Commencement Date, unless otherwise terminated as provided in Paragraph 9. VoiceStream shall have the right to extend the term of this Agreement for two (2) successive five (5) year periods (the "Renewal Terms") on the same terms and conditions as set forth herein. It is anticipated that Sprint/VoiceStream Site Lease (as defined in Paragraph 16Q) will commence on even date with Commencement Date of this Agreement

3. RENT

A. For the Initial Term, VoiceStream shall pay to Owner annual rent in the amount of Fifteen Thousand and 00/100 Dollars ($15,000.00),"Rent" in installments of One Thousand Two Hundred Fifty and 00/100 Dollars ($1,250.00) beginning on the first day of the month following the Commencement Date, and monthly thereafter. VoiceStream represents to Owner that Rent currently is exempt from sales tax. If Rent is subject to sales tax in the future, VoiceStream shall either remit such tax to Owner along with VoiceStream's payments of Rent or, if permitted by the then applicable rules and regulations of the taxing authority, pay such tax directly to the taxing authority.

B. For any Renewal Term, VoiceStream shall pay Rent in the amount of Rent to be paid during the previous term (whether the Initial Term or a Renewal Term), increased by an amount equal to a percentage of the Rent to be paid during such previous term, which percentage increase shall be computed and established for

Document to be re-recorded.
Date missing from original recording.

the entire current Renewal Term at the beginning of each such Renewal Term by multiplying the number of years in the previous term (whether the Initial Term or Renewal Term) times three percent (3%) or the CPI-U (all items), whichever is greater

C Rental payments shall be paid to Owner at the address set forth beneath the signature of Owner or to such other addresses Owner may advise VoiceStream in writing, pursuant to the notice provisions of Paragraph 16 I, at least thirty (30) days prior to any Rent payment date.

D. The Owner/Sprint Agreement (as defined in Paragraph 16Q) provides that Owner is entitled to receive all rents from all locators and/or colocators of communications equipment on the Tower (as defined in Paragraph 4). Owner acknowledges that the Rent payable to Owner pursuant to this Agreement constitutes all rent and Owner's sole compensation for VoiceStream's right to occupy and use the Project Site pursuant to this Agreement and the Tower pursuant to the Sprint/VoiceStream Site Lease. Owner further acknowledges that VoiceStream will not pay any rent to Sprintcom, Inc. pursuant to the Sprint/VoiceStream Site Lease and, therefore, Sprintcom, Inc. will not remit any rent to Owner for VoiceStream's right to occupy and use the Tower

4 USE.

A. The Project Site may be used for the purpose of installing, removing, replacing, maintaining and operating a communications facility generally in, under, on and above the Project Site as shown on Exhibit "B", subject to such modifications and alterations as required by VoiceStream (collectively, the "Communications Facility", which Communications Facility, without limitation, shall constitute a portion of the VoiceStream Facilities), provided that VoiceStream shall not be required to occupy the Project Site. Owner shall provide VoiceStream with twenty-four (24) hour, seven (7) day a week, year-around access to the Project Site. VoiceStream shall pay all personal property taxes assessed against the VoiceStream Facilities. Owner shall timely pay all real property taxes and assessments against the Owner's Property. VoiceStream shall not allow any construction or materialmen's liens to be placed on the Project Site or Owner's Property as a result of its work on the Project Site VoiceStream shall construct a security fence around the Premises and shall be responsible for landscaping around the perimeter of the fence

B No erection or construction of building(s), fences, antennas or appurtenances may be undertaken by VoiceStream without prior written approval of Owner which approval shall not be unreasonably withheld or delayed. Furthermore, VoiceStream must first locate all underground utilities and ensure to Owner's satisfaction that any and all construction or work to be undertaken does not conflict with underground utilities. Owner shall have the right to approve plans for any improvements installed by VoiceStream on the Property, which approval shall not be unreasonably withheld or delayed. Improvement of the Property to meet VoiceStream's needs shall be at VoiceStream's sole expense, and VoiceStream shall maintain such improvements to the Property in a reasonable condition throughout the term.

C. Owner acknowledges that VoiceStream's ability to use the Project Site for its intended purposes is contingent upon VoiceStream's obtaining and maintaining, both before and after the Commencement Date, all of the certificates, permits, licenses and other approvals (collectively, "Government Approvals") that may be required by any federal, state or local authority for the foregoing uses and improvements to the Project Site desired by VoiceStream

Book: 4687
Page: 4495

Owner shall cooperate with VoiceStream in VoiceStream's efforts to obtain such Governmental Approvals provided that this shall not be construed to abrogate the City's legislative authority or to require approval by the City of such application and/or permit as may be necessary, including conditional use approval, for VoiceStream to make such proposed use of the Project Site Owner, further, acknowledges that, unless and until title to the Tower (as hereinafter defined) vests in Owner, VoiceStream's ability to occupy and use the Project Site is, also, contingent upon VoiceStream's obtaining and maintaining the Sprint/VoiceStream Site Lease.

D. Prior to installing any equipment or antennas on the Tower or the Project Site, VoiceStream agrees to conduct such surveys, structural strength analyses, subsurface boring tests, radio tests, environmental audits, and other activities of a similar nature as VoiceStream may deem necessary, at the sole cost of VoiceStream, and to provide to Owner the results of a simulation test to ensure that all VoiceStream's uses and frequencies will not interfere with existing uses and frequencies transmitted to, from, or on the Tower and Project Site The term "Tower", as used in this subparagraph and elsewhere in this Agreement, shall mean the monopole owned and operated by SprintCom, Inc on the Owner's Property. VoiceStream further agrees to provide, prior to any installation of VoiceStream's equipment on the Tower or Project Site, detailed specifications on all such equipment, including but not limited to, type(s) of antennas, height(s) of antennas, exact positioning on the Tower, and power and frequencies to be transmitting on In the event Owner or its agent(s) conducts an independent simulation test to determine interference potential, VoiceStream shall be given the opportunity to participate in such testing; provided, however, Owner's decision and interpretation of the test results shall be final and binding on VoiceStream. As a material condition to this Agreement, VoiceStream agrees to install radio equipment of a type and frequency which will not cause interference with owner or existing tenants; provided further, VoiceStream agrees to make reasonable accommodation as to location and operation, to facilitate and accommodate subsequent users which VoiceStream acknowledges are reasonably contemplated by Owner, and to make reasonable modification so as to accommodate reasonable secondary users, provided additional construction costs will be borne by said secondary users other than Owner. If a question arises as to what is reasonable, Owner shall decide, provided that VoiceStream may request that the matter be mediated, with the costs shared pro-rata between the parties. VoiceStream shall provide Owner with a key and access to VoiceStream's equipment and to the electrical power to VoiceStream's equipment and antennas In the event VoiceStream's equipment causes interference, VoiceStream shall immediately cease such interference and solve interference problems at its sole cost In the event such interference occurs and VoiceStream fails to eliminate such interference, Owner may after 24 hours notice to VoiceStream immediately shut the power off to the antennas and equipment of VoiceStream , and the total cost and expense therefore shall be charged to VoiceStream. In the event VoiceStream decides to modify or change any of its antenna(s) or other equipment, VoiceStream must first provide Owner with at least sixty (60) days notice of intent, and must receive prior written approval of Owner prior to making such changes or modifications, which will not be unreasonably withheld or delayed.

E. VoiceStream, its agents and contractors, are hereby granted the right, at VoiceStream's sole cost and expense, to enter upon the Owner's Property and conduct such studies as VoiceStream deems necessary to determine the Project Site's suitability for VoiceStream's intended use. These studies may include surveys, soil tests, environmental evaluations, radio wave propagation measurements, field strength tests and such other analyses and studies as VoiceStream deems necessary or desirable. Owner shall cooperate with VoiceStream

Book: 4673 Page: 598

and execute all documents required to permit VoiceStream's intended use of the Project Site subject to compliance with zoning, land use, building and any other applicable regulations, whether local, state or federal in nature. Owner hereby appoints VoiceStream as its agent and attorney-in-fact for the limited purpose of making such filings and taking such actions as are necessary to obtain any desired zoning, land use approvals, building permits and/or any other applicable permits and approvals.

5. UTILITIES. Payment for electric service and for telephone or other communication services to the VoiceStream Facilities shall be VoiceStream's responsibility. Owner agrees to cooperate with VoiceStream in its efforts to connect the VoiceStream Facilities to existing utility service at VoiceStream's expense.

6. REMOVAL OF VOICESTREAM FACILITIES All personal property and trade fixtures of VoiceStream shall be removed by VoiceStream upon the termination of this Agreement. Within thirty (30) days of the expiration or earlier termination of this Agreement, VoiceStream shall return the Project Site to the condition existing at the time of this Agreement's execution, reasonable wear and tear and loss by casualty, condemnation and other causes beyond VoiceStream's control excepted. Notwithstanding the foregoing, upon expiration or earlier termination of this Agreement, VoiceStream shall not be required to remove any foundation more than two (2) feet below grade level.

7 INSURANCE. During the term and all extensions of this Agreement, VoiceStream agrees to maintain adequate insurance to cover the potential costs and liabilities, including comprehensive general public liability insurance. VoiceStream shall provide Owner with a certificate of insurance, issued by an insurance company licensed to do business in the state in which the Tower is located indicating that VoiceStream carries comprehensive general liability insurance with limits of liability thereunder of not less than $1 million combined single limit for bodily injury and/or property damage together with an endorsement for contractual liability. Such insurance shall name Owner as an additional insured with respect to the Property. VoiceStream will provide Owner with a renewal certificate within ten (10) business days of Owner's request for such certificate. Any insurance required to be provided by VoiceStream under this paragraph may be provided by a blanket insurance policy covering the Project Site and other locations of VoiceStream, provided such blanket insurance policy complies with all of the other requirements of this Agreement with respect to the type and amount of insurance required. VoiceStream may also fulfill its requirements under this paragraph through a program of self-insurance, provided VoiceStream complies with all statutes, rules and regulations governing same, including, but not limited to, the "Commercial Self-Insurance Fund Act," Sections 624.460-624.488, Florida Statutes, the Florida Insurance Code, and any rule adopted pursuant thereto, and further provided VoiceStream provides Owner a copy of its "subsisting certificate of authority" from the Florida Department of Insurance, which must be valid throughout the term of self insurance.

8. CONDITIONS OF PROPERTY. Owner represents that the Owner's Property and all improvements thereto, are in compliance with all building, life/safety, and other laws, ordinances, rules and regulations of any governmental or quasi-government authority.

9. TERMINATION. This Agreement may be terminated by VoiceStream at any time, in its sole discretion, by giving written notice thereof to Owner not less than 30 days prior to the Commencement Date, or upon 30 day written notice to Owner of expiration or termination of the Sprint/VoiceStream Site Lease, provided, in

Book: 4687
Page: 4447

either event, VoiceStream pays Owner the balance of the Rent for the current term of this Agreement. Further, this Agreement may be terminated by VoiceStream immediately, at any time, upon giving written notice to Owner, if: (a) VoiceStream cannot obtain all governmental certificates, permits, licenses or other approvals (collectively, "Approvals") required and/or any easements required from any third party; or (b) any Approval is canceled, terminated, expires or lapses; or (c) Owner fails to deliver any non-disturbance agreement or subordination agreement required by VoiceStream; or (d) Owner breaches a representation or warranty contained in this Agreement; or (e) Owner fails to have proper ownership of the Owner's Property and/or the Project Site and/or authority to enter into this Agreement; or (f) VoiceStream determines that the Project Site is not appropriate for its operations for economic, environmental or technological reasons, or (h) Owner fails to provide to VoiceStream complete and correct copies of any ground lease or other document pursuant to which Owner holds title to the Owner's Property. Such termination shall not constitute a waiver of VoiceStream's rights under Paragraph 15 of this Agreement. In the event VoiceStream terminates this Agreement within 180 days of first execution, VoiceStream will only be required to pay Owner a $1,000.00 cancellation fee in lieu of the above specified Rent balance.

10. INDEMNITY. VoiceStream shall indemnify and hold Owner and its officers, directors, agents, servants, employees, successors, and assigns harmless of and from any and all claims for bodily injury, death or property damage, any other losses, damages, charges or expenses, including reasonable attorneys' fees, witness fees, court costs and the reasonable value of any services rendered by any officer or employee of Owner, and any orders, judgments or decrees which may be entered which arise or are alleged to have arisen out of, in connection with or attributable to VoiceStream's activities under this Agreement and/or the placement, repair, relocation or removal by Owner, VoiceStream, its agents or contractors of any portion of equipment, excepting only those claims resulting from the gross negligence of Owner. VoiceStream shall undertake at its own expense the defense of any action which may be brought against Owner for damages, injunctive relief or for any other cause of action arising or alleged to have arisen out of, in connection with or attributable to, the foregoing and, in the event any final judgment therein should be rendered against Owner resulting from the foregoing, VoiceStream shall promptly pay the final judgment together with all costs relating thereto; and VoiceStream being allowed, however, an appeals or appeals to the appropriate court or courts from the judgment rendered in any such suit or action upon the filing of such supersedeas bond as shall be required to prevent levy or judgment against the Owner during such appeal or appeals.

11. HAZARDOUS SUBSTANCES. Owner represents that Owner has no knowledge of any substance, chemical, or waste on the Project Site that is identified as hazardous, toxic or dangerous in any applicable federal, state or local law, ordinance, rule or regulation ("Hazardous Substances"). VoiceStream represents and warrants that its use of the Project Site will not generate any hazardous substance, and it will not store or dispose on the Project Site nor transport to or over the Project Site any hazardous substance. VoiceStream may use closed cell batteries on site, so long as they are appropriately permitted and neither leak nor are discarded on the Project Site. VoiceStream further agrees to hold Owner harmless from and indemnify Owner against any release of any such hazardous substance by VoiceStream, its agents, employees, contractors and subcontractors, and any damage, loss, or expense or liability resulting from such release including all attorneys' fees, costs and penalties incurred as a result thereof. "Hazardous Substance" shall be interpreted broadly to mean pollutants, contaminants, oil or petroleum products, flammables, or any substance or material defined or designated as hazardous or toxic waste, material, or radioactive

Book: 4687
Page: 4498

substance, or other similar term by any federal, state or local environmental law, code, regulation or rule presently in effect or promulgated in the future, as such laws, regulations or rules may be amended from time to time; and it shall be interpreted to include, but not be limited to, any substance which, after release into the environment, will or may reasonably be anticipated to cause sickness, death or disease.

12. CASUALTY/CONDEMNATION. If any portion of the Owner's Property, Project Site or the VoiceStream Facilities is damaged by any casualty and such damage adversely affects VoiceStream's use of the Project Site or the VoiceStream Facilities, or if a condemning authority takes any portion of the Owner's Property and such taking adversely affects VoiceStream's use of the Project Site or the VoiceStream Facilities, this Agreement shall terminate as of the date of the casualty or the date on which title vests in the condemning authority, as the case may be.

13. WAIVER OF OWNER'S LIEN. VoiceStream shall keep the Property and the Tower free from any liens arising out of any work performed, materials furnished, or obligations incurred by or for VoiceStream. VoiceStream shall, within twenty (20) days following the imposition of any such lien, cause the same to be released of record by payment or posting of a proper bond. No work which Owner permits VoiceStream to perform on the Property shall be deemed to be for the use and benefit of Owner so that no mechanics or other lien shall be allowed against Owner by reason of its consent to such work. Owner shall have the right to post notices that it is not responsible for payment for any such work. To the extent permitted by law, Owner hereby waives any and all lien rights it has or may have, statutory or otherwise, concerning the Communications Facility or any portion thereof which shall be deemed personal property for the purposes of this Agreement, regardless of whether or not the same is deemed real or personal property under applicable law.

14. QUIET ENJOYMENT. VoiceStream, upon payment of the Rent, shall peaceably and quietly have, hold and enjoy the Project Site. If, as of the date of execution of this Agreement or hereafter, there is any mortgage, or other encumbrance affecting Owner's Property, then Owner agrees to obtain from the holder of such encumbrance a Subordination, Non-Disturbance and Attornment Agreement pursuant to the terms of which VoiceStream shall not be disturbed in its possession, use and enjoyment of the Project Site. Owner agrees not to allow any future tenant's use of the Tower to cause interference with or cause the improper operation of VoiceStream's equipment. All tenants of the Tower will have equal priority rights, and no tenant will be permitted to interfere with an existing tenant's use or frequency. No tenant shall have priority over Owner's use or frequency. If VoiceStream's equipment causes interference which cannot be resolved after VoiceStream's good faith and diligent efforts to do so, VoiceStream may terminate this Agreement on thirty (30) days written notice; provided however, any such termination occurring after one hundred eighty (180) days of commencement of this Agreement shall obligate VoiceStream to pay liquidated damages to Owner in the full amount of the balance of the Rent for the term of this Agreement. VoiceStream, in such event, will also be obligated to Owner for any costs or damages incurred prior to said termination.

15. DEFAULT. Except as expressly limited herein, Owner and VoiceStream shall each have such remedies for the default of the other party hereto as may be provided at law or equity following written notice of such default and failure to cure the same within thirty (30) business days. If there occurs an event of default by VoiceStream, which is not cured as permitted herein, in addition to

any other remedies available to Owner at law or in equity, Owner shall have the option to terminate this Agreement and all rights of VoiceStream herewith

Upon default and upon written notice and subject to all applicable cure periods provided in this Agreement (and if no such notice and cure period is provided, following thirty (30) days written notice and opportunity to cure), in addition to any other rights and remedies available at law or in equity, the nondefaulting party shall be entitled to cure said default and to set-off or add on any and all sums, costs, expenses, fees (including reasonable attorney's fees) incurred in effecting such cure against Rent or any other sums due or thereafter coming due under this Agreement.

16. MISCELLANEOUS

A. Owner represents and warrants that Owner has full authority to enter into and sign this Agreement and has good and marketable title to the Owner's Property

B. VoiceStream represents and warrants that it is duly authorized to do business in Florida and that the undersigned signatory for VoiceStream is fully authorized by VoiceStream to enter into this Agreement on behalf of VoiceStream.

C. This Agreement supersedes all prior discussions, negotiations and agreements between the parties hereto and contains all agreements and understandings between the Owner and VoiceStream regarding the subject matter of this Agreement. This Agreement may only be amended by a writing signed by both parties. Exhibits "A" through "C" are hereby incorporated into this Agreement by reference

D. This Agreement may be signed in counterparts by the parties hereto

E The terms and conditions of this Agreement shall extend to and bind the heirs, personal representatives, successors and assigns of Owner and VoiceStream.

F. The prevailing party in any action or proceeding to enforce the terms of this Agreement shall be entitled to receive its reasonable attorneys' fees and other reasonable enforcement costs and expenses from the non-prevailing party, together with its other reasonable litigation expenses. In addition to the other remedies provided for in this Agreement, Owner and VoiceStream shall be entitled to immediate restraint by injunction of any violation of any of the covenants, conditions or provisions of this Agreement.

G. Simultaneously herewith or on or before the Commencement Date, Owner shall execute and acknowledge and deliver to VoiceStream for recording a memorandum of this Agreement ("Memorandum") in the form of Exhibit "C". Owner hereby grants VoiceStream permission to insert the effective date of this Agreement into the Memorandum after execution of the Memorandum

H. Except to a "Partner Company," "Affiliate," "Subsidiary" or a Subsidiary or Affiliate of a Partner Company of VoiceStream (as defined below), VoiceStream shall not assign this Agreement, or allow it to be assigned, in whole or in part, by operation of law or otherwise without the prior written consent of Owner, such consent not to be unreasonably withheld or delayed. An Affiliate of an entity is any corporation fifty-one percent (51%) or more of the stock of which is owned, directly or indirectly, by such entity A Subsidiary of an entity is any corporation eighty percent (80%) or more of which is owned by such

entity. No consent by Owner to any assignment or sublease by VoiceStream shall relieve VoiceStream of any obligation to be performed by VoiceStream under this Agreement, whether arising before or after the assignment or sublease. The consent by Owner to any assignment or sublease shall not relieve VoiceStream from the obligation to obtain Owner's express written consent to any other assignment or sublease. Any sale or other transfer, including by consolidation, merger or reorganization, of a majority of the voting stock of VoiceStream, shall not be an assignment for purposes of this Paragraph. VoiceStream may lien or pledge its communications equipment at Owner's Property and its interest in this Agreement to a lender for financing purposes.

I. Notices shall be in writing and sent by United States Mail, postage prepaid, certified or registered with return receipt requested, or by any nationally-recognized overnight courier service to the address set forth beneath the signature of each party below. Any such notice shall be deemed given when deposited in the United State Mail or delivered to such courier service

J. This Agreement shall be construed in accordance with the laws of the State of Florida.

K Each party agrees to furnish to the other, within ten (10) days after request, such truthful estoppel information as the other may reasonably request

L. Owner and VoiceStream each represent that they have not been represented by a real estate broker or other agent in this transaction. Each party shall indemnify and hold the other party harmless from any claims for commission, fee or other payment by such broker or any other agent claiming to have represented a party herein.

M The parties hereto warrant and represent, each to the other, that the matters of fact contained herein are true and accurate.

N RADON GAS: Radon is a naturally occurring radioactive gas that, when it has accumulated in a building in sufficient quantities, may present health risks to persons who are exposed to it over time. Levels of radon that exceed federal and state guidelines have been found in buildings in Florida. Additional information regarding radon testing may be obtained from your county public health unit

O VoiceStream has the right but not the obligation from time to time to pay any taxes, judgments, liens, assessments and/or any other charges outstanding which are levied upon Owner or the Owner's Property and which are or in the future could become liens upon the Owner's Property, in whole or in any part (individually and collectively, "Liens"). In the event that VoiceStream satisfies or pays any such Liens, in whole or in part, VoiceStream shall have the right but no duty to set off and offset any and all amounts so paid against Rent and any other sums payable or to become payable pursuant to the terms of this Agreement ("Rent and Other Charges"). If VoiceStream elects to set off or offset the amounts paid by VoiceStream against Rent and Other Charges, immediately upon demand, Owner shall reimburse VoiceStream for all sums paid by VoiceStream which exceed such Rent and Other Charges. In the event that VoiceStream elects not to set off or offset the amounts paid by VoiceStream against Rent and Other Charges, immediately upon demand, Owner shall reimburse VoiceStream for all amounts paid by VoiceStream. VoiceStream's rights to satisfy or pay Liens (in whole or in part) and then to set off and offset as described in this subparagraph include the right of VoiceStream to pay and set off and offset any and all attorney's

Book: 4687
Page: 4501

fees incurred by VoiceStream in connection with making such payments and/or obtaining such full or partial satisfactions.

P. OWNERSHIP. Ownership of VoiceStream's equipment shall vest with VoiceStream. VoiceStream agrees to maintain its equipment placed on the Project Site at its own expense during the entire term of this Agreement and all extensions thereof.

Q. Owner and SprintCom are parties to a Site Agreement For Land dated September 28, 1998 (the "Owner/Sprint Agreement") under which Owner leases to SprintCom, Inc. the portion of the Owner's Property on which the Tower and SprintCom's facilities are located, more particularly described in said Site Agreement For Land. As permitted by the Master Collocation Sublease Agreement dated October 14, 1999 and amended June 6, 2000 between Sprint Spectrum L.P. and VoiceStream Wireless Corporation for the benefit of themselves and their affiliates and subsidiaries, SprintCom, Inc. and VoiceStream intend to enter into a Site Lease Acknowledgment ("the Sprint/VoiceStream Site Lease") under which SprintCom, Inc. leases VoiceStream space on the Tower. The Owner/SprintCom Agreement provides that, upon expiration or prior termination of the Owner/SprintCom Agreement, removal by SprintCom, Inc. of its equipment on the Tower, abandonment of the Tower by SprintCom, Inc., bankruptcy or insolvency of SprintCom, Inc. or any other means by which the continued active presence on and maintenance of the Tower by SprintCom, Inc. ceases, title to the Tower automatically vests in Owner free and clear of any liens or encumbrances. Owner and VoiceStream agree that, upon title to the Tower vesting in Owner, the definition of the Project Site in Paragraph 1 of this Agreement shall be deemed to be modified to also encompass VoiceStream's space on the Tower, and VoiceStream's occupancy of the Tower shall continue for the remainder of the Initial Term and/or Renewal Terms under the terms and conditions of this Agreement.

(The balance of this page intentionally left blank)

SITE ID: A2A435-A
SITE NAME: Deltona NE

IN WITNESS WHEREOF, the parties hereto bind themselves to this Agreement on this 17th day of April, 2001.

OWNER

Witnesses:

1. Janet Day
Print Name: JANET DAY

2. Helen J Dicks
Print Name: Helen J Dicks

City of Deltona

By: John Masiarczyk
JOHN MASIARCZYK, Mayor

Date: 4-17-01

Attest: Faith G. Miller
FAITH MILLER, City Clerk

Date: 4-17-01

Address of Owner:
City of Deltona
P.O Box 5550
Deltona, FL 32728

[Corporate Seal]

Telephone No.:(407)860-7160
Facsimile No.:(407)860-7167
Federal ID No.: 59-3348668

With copy to:
James A. Fowler, Esq.
Fowler, Barice, Feeney & O'Quinn, P.A
28 West Central Blvd.
Orlando, FL 32801

VOICESTREAM

VoiceStream Tampa/Orlando, Inc

Witnesses:

1 Gloria Yurcus
Print Name: GLORIA YURCUS

2 [illegible]
Print Name: [illegible] M. KARCH

By: [illegible]
Bryan J. Fleming, Director
of Engineering & Operations

Date: 4/6/01

Address:
VoiceStream Tampa/Orlando, Inc.
12920 SE 38th Street
Bellevue, WA 98006
Attn: PCS lease Administrator
With a Copy to: Attn: Legal Department

For emergencies:
National Operations: (800)416-7782
Local Operations: (813)243-3300

With copy to:
VoiceStream Tampa/Orlando, Inc.
3111 W. Dr. Martin Luther King, Jr., Blvd. Suite 400
Tampa, FL 33607
Attn: Lease Administrator

SITE ID: A2A435-A
SITE NAME: Deltona NE

Book: 4673
Page: 605

EXHIBIT "A" TO SITE AGREEMENT

LEGAL DESCRIPTION OF THE OWNER'S PROPERTY:

LEGAL DESCRIPTION PARENT TRACT

PARENT TRACT
(AS PROVIDED)

That certain parcel of land lying and being a part of Tract "I" of DELTONA LAKES
UNIT SEVENTY–FOUR, according to the Plat thereof as recorded in Plat Book 29 Pages 28 through 44 inclusive of the Public Records of Volusia County, Florida.

Being more particularly described as follows:

Begin at the most Easterly corner of said Tract "I", the same being a point on the Southwesterly right–of–way line of State Road No. 444 as shown on said plat of DELTONA LAKES UNIT SEVENTY–FOUR, thence run S 42° 41' 44" W, along the Southeasterly boundary line of said Tract "I", a distance of 250.00 feet; thence run S 87° 41' 44" W, a distance of 100.00 feet; thence run N 47° 18' 16" W, a distance of 106.86 feet; thence run N 42° 41' 44" E, a distance of 320.71 feet to a point on the aforementioned Southwesterly right–of–way line of State
Road No. 444; thence run S 47° 18' 16" E, along said right–of–way line, a distance of 177.57 feet to the Point of Beginning.

LEGAL DESCRIPTION UTILITY EASEMENT

PROPOSED 10' UTILITY EASEMENT

A 10 foot wide strip of land for the installation and maintenance of utility lines appurtenant to a telecommunications facility lying within Tract "I" of DELTONA LAKES UNIT SEVENTY –FOUR, City of Deltona, Volusia County, Florida, the centerline of said easement being more particularly described as follows:

For a point of reference, commence at the Northeast corner of said Tract "I", said point also lying on the Southwesterly right–of–way line of State Road No.444 (Howland Boulevard); thence along the Southeasterly boundary of said Tract "I", S42°41"44"W, 203.94 feet for a POINT OF BEGINNING of the centerline of a 10 foot wide utility easement; thence leaving said Southwesterly line and along the centerline, 63.56 feet, to an intersection with the Southwesterly line of a 21 foot by 12 foot lease parcel and a POINT OF TERMINATION of said centerline of the described 10 foot wide easement.
Containing 153 square feet, more or less.

PROPOSED 5' UTILITY EASEMENT

A 5 foot wide strip of land for the installation and maintenance of utility lines appurtenant to a telecommunications facility lying within Tract "I" of DELTONA LAKES UNIT SEVENTY –FOUR, City of Deltona, Volusia County, Florida, the centerline of said easement being more particularly described as follows:

For a point of reference, commence at the Northeast corner of said Tract "I", said point also lying on the Southwesterly right–of–way line of State Road No.444 (Howland Boulevard); thence along said Southwesterly right–of–way line, N47°18'16"W, 39.82 feet for a POINT OF BEGINNING of the centerline of a 5 foot wide strip; thence leaving said Southwesterly right–of–way line and along the centerline, S46°55'01"W, 152.77feet to an intersection with the Northeasterly line of a 12 foot by 21 foot lease area and a POINT OF TERMINATION of the described 5 foot wide easement.
Containing 199 square feet, more or less.

LEGAL DESCRIPTION INGRESS–EGRESS EASEMENT

PROPOSED INGRESS/EGRESS EASEMENT

A 20 foot wide strip of land for Ingress/Egress to a telecommunications facility lying within Tract "I" of DELTONA LAKES UNIT SEVENTY –FOUR, City of Deltona, Volusia County, Florida, the centerline of said easement being more particularly described as follows:

For a point of reference, commence at the Northeast corner of said Tract "I", said point also lying on the Southwesterly right–of–way line of State Road No.444 (Howland Boulevard); thence along said Southwesterly right–of–way line, N47°18'16"W, 15.00 feet for a POINT OF BEGINNING of the centerline of a 20 foot wide strip; thence along the centerline the following calls: S42°41'4"W, 162.84 feet; thence N47°18'16"w, 33.49 feet to an intersection with the Southwesterly line of a 21 foot by 12 foot lease parcel and a POINT OF TERMINATION of said centerline of the described 20 foot wide easement.
Containing 4,926 square feet, more or less.

It is agreed by Owner and VoiceStream that the proper and precise legal description for the Owner's Property will be corrected, if necessary, and that the correct legal description may be place on this Exhibit "A" and/or that this Exhibit "A" may be replaced to reflect such proper and precise legal description by VoiceStream unilaterally

SITE ID: A2A435-A
SITE NAME: Deltona NE

EXHIBIT "B" TO SITE AGREEMENT
Page 1 of 2

SKETCH AND DESCRIPTION OF THE PROJECT SITE:

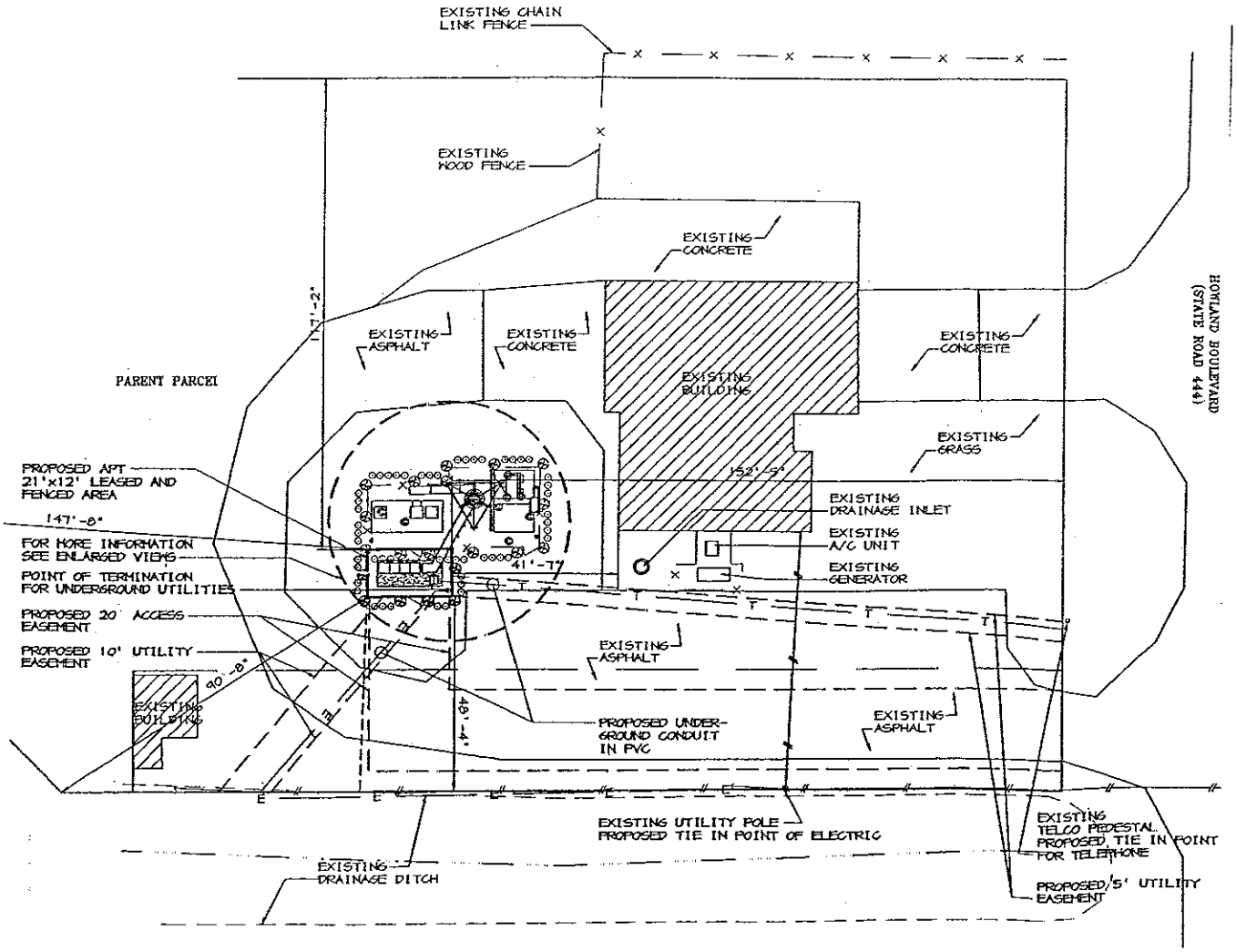

OVERALL SITE PLAN 2

Notes:

1 The instrument to which this exhibit is attached and into which instrument this exhibit is fully incorporated may be modified and/or amended to establish, clarify or change the location of the nonexclusive easement for utility lines and cables by recording an instrument signed by VoiceStream and Owner in the public records of the County in which the Owner s Property is located, which instrument shall set forth the details of such modification and/or amendment.

2. Notwithstanding anything in the instrument which this exhibit is attached to the contrary, the parties may by joint written agreement replace and substitute for this exhibit a survey of the Project Site, showing non-exclusive easements for ingress, egress and utility lines and cables to service the Project Site and/or may replace and substitute for this exhibit construction drawings of the VoiceStream Facilities of the Project Site.

3 Setback of the VoiceStream Facilities from the boundaries of Owner's Property and of the Project Site shall be the distance required by the applicable governmental authorities

4 Width of any access road or easement granted to or used by VoiceStream, shall be the width required by the applicable governmental authorities, including police and fire departments but in no event less than fifteen feet (15') except if prohibited by governmental authorities having jurisdiction over the Owner's Property the Project Site and/or the VoiceStream Facilities.

Book: 4673
Page: 607

Book: 4687
Page: 4505

SITE ID: A2A435-A
SITE NAME: Deltona NE

EXHIBIT "B" TO SITE AGREEMENT
Page 2 of 2

SKETCH AND DESCRIPTION OF THE PROJECT SITE: Legal description of property to be attached.

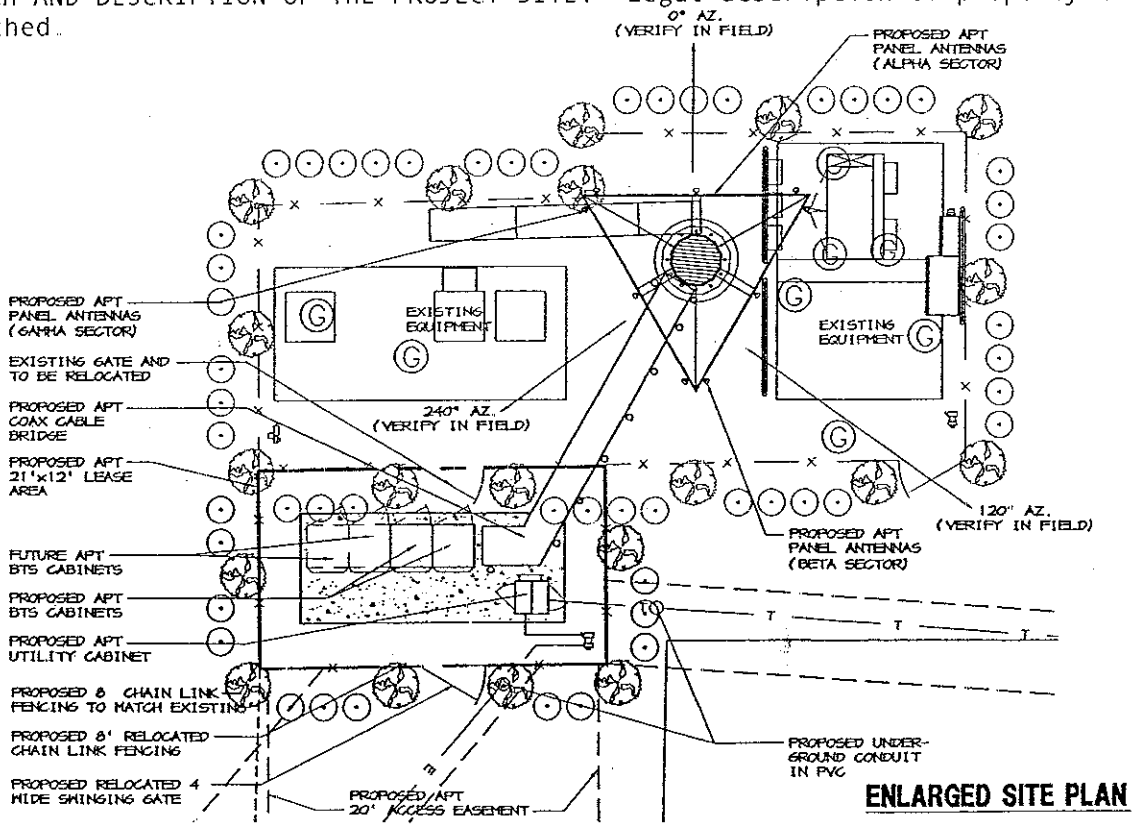

LEGAL DESCRIPTION LEASE AREA

PROPOSED LEASE AREA

A 12 foot by 21 foot parcel of land for the installation and maintenance of a telecommunications facility lying within Tract "I" of DELTONA LAKES UNIT SEVENTY-FOUR, City of Deltona, Volusia County, Florida, said lease area boundary being more particularly described as follows:

For a point of reference, commence at the Northeast corner of said Tract "I", thence along the Southeasterly boundary of said Tract "I", S42°41"44"W, 174.96 feet; Thence leaving said Southeasterly line, N45°23'25"W, 48.52 feet for a POINT OF BEGINNING of a lease area; thence N47°41'34"W, 12.00 feet; thence N42°18'26"E, 21.00 feet; thence S47°41'34"E, 12.00 feet; thence S42°18'26"W, 21.00 feet to the Point of Beginning.
Containing 252 square feet, more or less.

Notes:

1 The instrument to which this exhibit is attached and into which instrument this exhibit is fully incorporated may be modified and/or amended to establish, clarify or change the location of the nonexclusive easement for utility lines and cables by recording an instrument signed by VoiceStream and Owner in the public records of the County in which the Owner s Property is located, which instrument shall set forth the details of such modification and/or amendment.

2 Notwithstanding anything in the instrument which this exhibit is attached to the contrary, the parties may by joint written agreement replace and substitute for this exhibit a survey of the Project Site, showing non-exclusive easements for ingress, egress and utility lines and cables to service the Project Site and/or may replace and substitute for this exhibit construction drawings of the VoiceStream Facilities of the Project Site.

3 Setback of the VoiceStream Facilities from the boundaries of Owner s Property and of the Project Site shall be the distance required by the applicable governmental authorities.

4 Width of any access road or easement granted to or used by VoiceStream, shall be the width required by the applicable governmental authorities, including police and fire departments but in no event less than fifteen feet (15') except if prohibited by governmental authorities having jurisdiction over the Owner's Property the Project Site and/or the VoiceStream Facilities

SITE ID: A2A435-A
SITE NAME: Deltona NE

PREPARED UNDER THE SUPERVISION OF:
Bryan J Fleming
VoiceStream Tampa/Orlando, Inc
3111 W. Dr. Martin Luther King, Jr. Blvd
Suite 400
Tampa, Florida 33607

After recording return to:
VoiceStream Tampa/Orlando, Inc.
3111 W. Dr. Martin Luther King, Jr. Blvd.
Suite 400
Tampa, Florida 33607
Attn: Lease Administrator

MEMORANDUM OF SITE AGREEMENT FOR LAND/LEASE

THIS MEMORANDUM OF SITE AGREEMENT FOR LAND/LEASE ("Memorandum") is made and entered into by and between City of Deltona, with an address of 800 Deltona Blvd., Second Floor, Deltona, FL 32725 as "Owner", and VoiceStream Tampa/Orlando, Inc., a Delaware corporation, and whose address is 12920 SE 38th Street, Bellevue, WA 98006, hereinafter referred to as "VoiceStream".

1. PREMISES. Owner and VoiceStream have entered into a Site Agreement for Land dated as of April 17, 2001, (together with any amendments and modifications thereto, the "Site Agreement"), whereby Owner has leased and VoiceStream has hired those certain premises in Volusia County, Florida, consisting of, among other things, approximately 252 square feet of land, as depicted and legally described on Exhibit "A" attached hereto and hereby incorporated into this Memorandum and certain easements (the "Project Site").

2. TERM. The initial term of the Site Agreement shall be a period of five (5) years commencing as of the "Commencement Date", as defined herein below, and terminating on the fifth (5th) anniversary of the Commencement Date unless otherwise terminated as provided in the Site Agreement ("Initial Term").

3. RENEWAL OPTIONS. In addition to the Initial Term and on and subject to the terms of the Site Agreement, the Site Agreement term may be automatically extended for two (2) consecutive periods of five (5) years each. Each such extension shall be known hereinafter as a "Renewal Term". Hereinafter, the Initial Term, together with any and all Renewal Terms, shall be known as the "Term" of the Site Agreement.

4. COMMENCEMENT. The "Commencement Date" is the date on which VoiceStream begins construction of the VoiceStream Facilities (as defined in the Site Agreement). Accordingly, unless otherwise specifically stated here:_____, the Commencement Date shall be the date of VoiceStream's filing of a Notice of Commencement in the public records of the county in which the Project Site is located.

5. LEASE INCORPORATED. All of the terms, conditions, provisions and covenants of the Site Agreement are hereby incorporated herein as if fully set forth in this Memorandum. To the extent that any of the terms hereof are

BOOK: 4673
PAGE: 609

BOOK: 4687
PAGE: 4507

inconsistent with the terms of the Site Agreement, the terms of the Site Agreement shall control. In the event that an inspection of or reference to the full terms, conditions, provisions or covenants of the Site Agreement is desired or necessary, a request for such inspection should be made to the Owner at the address set forth above, stating the name and address of the person and/or entity requesting the inspection, and setting forth the reason for the inspection. The Owner may permit or refuse such inspection in its sole and absolute discretion.

IN WITNESS WHEREOF, Owner and VoiceStream have executed this Memorandum as of the date and year set forth below their respective signatures.

Signed, sealed and delivered
in the presence of:

Witnesses:

1. Janet Day
Print Name: JANET DAY

2. Helen J Dicks
Print Name: Helen J Dicks

OWNER:

City of Deltona

By: John Masiarczyk
JOHN MASIARCZYK, Mayor

Date: 4-17-01

Attest: Faith G. Miller
FAITH MILLER, City Clerk

[Corporate Seal]

Date: 4-17-01

Address of Owner:
City of Deltona
P.O Box 5550
Deltona, FL 32728

Telephone No.:(407)860-7160
Facsimile No.:(407)860-7167
Federal ID No.: 59-3348668

VOICESTREAM

VoiceStream Tampa/Orlando, Inc.

Witnesses:

1. Gloria Yurcis
Print Name: GLORIA YURCIS

2. [illegible]
Print Name: [illegible] M. KARCH

By: [illegible]
Bryan L. Fleming, Director
of Engineering & Operations

Date: 4/9/01

SITE ID: A2A435-A
SITE NAME: Deltona NE

Book: 4673
Page: 610

Book: 4687
Page: 1594

STATE OF FLORIDA

COUNTY OF VOLUSIA

The foregoing instrument was acknowledged before me this 17th day of April, 2001, by John Masiarczyk, as Mayor of the City of Deltona. He is ✓ personally known to me *or* _____ has produced _____ as identification.

Jennifer Romaker.

Jennifer J. Romaker

(type or print name)
Notary Public-State of Florida

[Seal]

JENNIFER J ROMAKER
MY COMMISSION # CC 952241
EXPIRES: Jul 2 2004
1-800-3-NOTARY FL Notary Service & Bonding, Inc.

My commission expires: 7/2/04

STATE OF FLORIDA

COUNTY OF VOLUSIA

The foregoing instrument was acknowledged before me this 17th day of April, 2001, by Faith Miller, as City Clerk of the City of Deltona. She is ✓ personally known to me *or* _____ has produced _____ as identification.

Jennifer Romaker.

(type or print name)
Notary Public-State of Florida

[Seal]

JENNIFER J ROMAKER
MY COMMISSION # CC 952241
EXPIRES: Jul 2 2004
1-800-3-NOTARY FL Notary Service & Bonding, Inc.

My commission expires: 7/2/04

STATE OF FLORIDA

COUNTY OF HILLSBOROUGH

The foregoing instrument was acknowledged before me this 9TH day of APRIL, 2001, by Bryan J. Fleming as Director of Engineering Operations, of VoiceStream Tampa/Orlando, Inc. He is, ✓ personally known to me *or* ___ has produced _____ as identification.

Gloria J. Yurcus

(type or print name) GLORIA J. YURCUS
Notary Public-State of Florida

GLORIA J. YURCUS
COMMISSION #CC656381
EXPIRES JUNE 17, 2001

(Seal)

My commission expires: 6-17-01

SITE ID: A2A435-A
SITE NAME: Deltona NE

Book: 4675
Page: 611
Diane M. Matousek
Volusia County, Clerk of Court

EXHIBIT A TO MEMORANDUM OF SITE AGREEMENT FOR LAND/LEASE
Legal Description

LEGAL DESCRIPTION PARENT TRACT

PARENT TRACT
(AS PROVIDED)

That certain parcel of land lying and being a part of Tract "I" of DELTONA LAKES
UNIT SEVENTY-FOUR, according to the Plat thereof as recorded in Plat Book 29 Pages 28 through 44 inclusive of the Public Records of Volusia County, Florida.

Being more particularly described as follows:

Begin at the most Easterly corner of said Tract "I", the same being a point on the Southwesterly right-of-way line of State Road No. 444 as shown on said plat of DELTONA LAKES UNIT SEVENTY-FOUR, thence run S 42° 41' 44" W, along the Southeasterly boundary line of said Tract "I", a distance of 250.00 feet; thence run S 87° 41' 44" W, a distance of 100.00 feet; thence run N 47° 18' 16" W, a distance of 106.86 feet; thence run N 42° 41' 44" E, a distance of 320.71 feet to a point on the aforementioned Southwesterly right-of-way line of State
Road No. 444; thence run S 47° 18' 16" E, along said right-of-way line, a distance of 177.57 feet to the Point of Beginning.

LEGAL DESCRIPTION LEASE AREA

PROPOSED LEASE AREA

A 12 foot by 21 foot parcel of land for the installation and maintenance of a telecommunications facility lying within Tract "I" of DELTONA LAKES UNIT SEVENTY-FOUR, City of Deltona, Volusia County, Florida, said lease area boundary being more particularly described as follows:

For a point of reference, commence at the Northeast corner of said Tract "I", thence along the Southeasterly boundary of said Tract "I", S42°41"44"W, 174.96 feet; Thence leaving said Southeasterly line, N45°23'25"W, 48.52 feet for a POINT OF BEGINNING of a lease area; thence N47°41'34"W, 12.00 feet; thence N42°18'26"E, 21.00 feet; thence S47°41'34"E, 12.00 feet; thence S42°18'26"W, 21.00 feet to the Point of Beginning.
Containing 252 square feet, more or less.

UTILITY EASEMENT

PROPOSED 10' UTILITY EASEMENT

A 10 foot wide strip of land for the installation and maintenance of utility lines appurtenant to a telecommunications facility lying within Tract "I" of DELTONA LAKES UNIT SEVENTY -FOUR, City of Deltona, Volusia County, Florida, the centerline of said easement being more particularly described as follows:

For a point of reference, commence at the Northeast corner of said Tract "I", said point also lying on the Southwesterly right-of-way line of State Road No.444 (Howland Boulevard); thence along the Southeasterly boundary of said Tract "I", S42°41"44"W, 203.94 feet for a POINT OF BEGINNING of the centerline of a 10 foot wide utility easement; thence leaving said Southwesterly line and along the centerline, 63.56 feet, to an intersection with the Southwesterly line of a 21 foot by 12 foot lease parcel and a POINT OF TERMINATION of said centerline of the described 10 foot wide easement.
Containing 153 square feet, more or less.

PROPOSED 5' UTILITY EASEMENT

A 5 foot wide strip of land for the installation and maintenance of utility lines appurtenant to a telecommunications facility lying within Tract "I" of DELTONA LAKES UNIT SEVENTY -FOUR, City of Deltona, Volusia County, Florida, the centerline of said easement being more particularly described as follows:

For a point of reference, commence at the Northeast corner of said Tract "I", said point also lying on the Southwesterly right-of-way line of State Road No.444 (Howland Boulevard); thence along said Southwesterly right-of-way line, N47°18'16"W, 39.82 feet for a POINT OF BEGINNING of the centerline of a 5 foot wide strip; thence leaving said Southwesterly right-of-way line and along the centerline, S46°55'01"W, 152.77feet to an intersection with the Northeasterly line of a 12 foot by 21 foot lease area and a POINT OF TERMINATION of the described 5 foot wide easement.
Containing 199 square feet more or less.

INGRESS-EGRESS EASEMENT

PROPOSED INGRESS/EGRESS EASEMENT

A 20 foot wide strip of land for ingress/Egress to a telecommunications facility lying within Tract "I" of DELTONA LAKES UNIT SEVENTY -FOUR, City of Deltona, Volusia County, Florida, the centerline of said easement being more particularly described as follows:

For a point of reference, commence at the Northeast corner of said Tract "I", said point also lying on the Southwesterly right-of-way line of State Road No.444 (Howland Boulevard); thence along said Southwesterly right-of-way line, N47°18'16"W, 15.00 feet for a POINT OF BEGINNING of the centerline of a 20 foot wide strip; thence along the centerline the following calls: S42°41'4"W, 162.84 feet; thence N47°18'16"w, 33.49 feet to an intersection with the Southwesterly line of a 21 foot by 12 foot lease parcel and a POINT OF TERMINATION of said centerline of the described 20 foot wide easement.
Containing 4,926 square feet, more or less.

T-Mobile South LLC, a wholly owned subsidiary of T-Mobile USA, Inc.

7025 A.C. Skinner Parkway, Jacksonville, FL 32256
Telephone: (877) 373-0093
Attn: Property Management

May 10, 2011

VIA UPS OVERNIGHT DELIVERY
City of Deltona
2345 Providence Blvd.
Deltona, FL 32725-1806

RE: Site Agreement For Land and Co-Location ("Agreement") dated April 17, 2001 between City of Deltona and T-Mobile South LLC, successor in interest to VoiceStream Tampa/Orlando, Inc. ("T-Mobile")
Site ID: T-Mobile Site ID: A2A0435A / Sprint/USA
Site Address: 2147 Howland Blvd., Deltona, FL

To Whom It May Concern:

Pursuant to section 2 of the above referenced Agreement, T-Mobile is providing notice that it is exercising its right to extend the Agreement for an additional five (5) year term.

The current Term will expire on June 4, 2011 The Renewal Term will begin on June 5, 2011 and continue through June 4, 2016.

Should you have any questions or comments, I can be contacted via email or telephone as noted above.

Sincerely,

Paul Dupuis
Property Management Specialist
Jacksonville/Orlando Markets

cc: T-Mobile USA, Inc. (PCS Lease Administration)

City of Deltona

2345 Providence Blvd.
Deltona, FL 32725

Agenda Memo

AGENDA ITEM: C.

TO: Mayor and Commission

AGENDA DATE: 12/12/2016

FROM: Jane K. Shang, City Manager

AGENDA ITEM: 11 - C

SUBJECT:
Request for City of Deltona funds.

LOCATION:
N/A

BACKGROUND:
The Commission discussed at several meetings the $35,000 discretionary fund which could be provided to non-profit organizations who applied for them. The Commission directed staff to come up with an application and guidelines for this funding which has been done.

Attached is a request from the West Volusia Wolves JV Cheerleading Squad for City funds in the amount of $2,500.00 to assist with event and travel expenses associated with the squad going to compete at the National level for Pop Warner.

COST:
$2,500.00

SOURCE OF FUNDS:
General Fund

ORIGINATING DEPARTMENT:
City Clerk's Department

STAFF RECOMMENDATION PRESENTED BY:
Joyce Raftery, City Clerk - That the Commission determine whether or not to provide City funds for the West Volusia Wolves JV Cheerleading Squad in the requested amount of $2,500 or an amount to be determined by the Commission.

POTENTIAL MOTION:
"I move to approve or deny the request for City funds for the West Volusia Wolves JV Cheerleading Squad in the amount of $_____."

powered by Legistar™

REQUEST FOR CITY OF DELTONA FUNDS

AMOUNT OF FUNDS BEING REQUESTED: $ 2500

1. Requestor's Name: Jessica Kellie
2. Type of Organization: Youth Cheerleading
3. Contact Person: Jessica Kellie
4. Telephone number: 407-383-9729
5. Email address: jessica.kellie@me.com
6. Business office address: PO BOX 6486, DELTONA
7. Public service activity: Non for profit cheerleading for youth
8. Reason for request of funds: JV Cheer squad qualified to compete at Pop Warner Nationals. This will help with the event and travel expenses associated with competing at a National level
9. Have you received City funds for this program/project in past years? Y or N (circle one)
10. Description of program/project: Local cheerleaders ages 10-13 will be representing our city competition at the National Level for Pop Warner
11. Please describe how residents will directly be benefitted/communicated about the program/project being offered: This is an amazing accomplishment. Our girls took 1st place and grand champion at the district level, 1st and high score for jumps at the regional level qualifying them to compete at the National level 12/9. We have 30 girl team to support for a competitive weekend at Disney and we need community support to be able to achieve the dream. We will be competing against teams from all over the US! The trip cost will run us about $12,000 and our organization runs on a very slim budget to keep the cost down to our cheerleaders allowing anyone to participate. Of our 30 girls we have 17 "All American" athletes meaning not only are they amazing athletes but A students. I can't brag on what an amazing group of girls we have and how they have truly earned their way to Nationsl.

Jessica Kellie

AUTHORIZED SIGNATURE

COMMISSION APPROVAL: YES ☐ NO ☐

CITY OF DELTONA
REQUEST FOR CITY NON-PROFIT FUNDING

On October 1, 2016, the City of Deltona (City) approved $35,000 in funding from the General Fund for FY 2016-2017 for public service agencies and organizations. Requests are now being accepted from social service agencies or other public service organizations that are registered not-for-profit entities through 501c3 or similar capacity. Documentation will be requested as verification that City residents are directly served through this source of City funding.

The requests for funding will be submitted to the Deltona City Commission for their decision for the funding request. Unless otherwise determined by the City Commission, funding awarded to any one (1) agency or organization will be no less than $500 and no more than $2,500; and is limited to one (1) payment per agency or organization per City fiscal year.

REQUEST PROCESS AND AWARD OF FUNDS

- All requests must be submitted to the City's Manager's office.
- All requests shall be completed in-full, as verified by the City, and be signed by an authorized agent for the organization. Any incomplete or unsigned application received by the City will not be considered this fiscal year.
- All requests with original signatures may be mailed, hand-delivered, emailed, or faxed.
- No more than one funding request per agency or organization per fiscal year.
- Grant awards will be no less than $500 and no more than $2,500 for any one agency or organization per fiscal year.
- **All requests will be approved or denied at the discretion of the City Commission. The guiding criterion for funding will be based on how City of Deltona residents will directly be benefitted from the funds.**

Requests to be submitted to:

CITY OF DELTONA

CITY MANAGER'S OFFICE

2345 PROVIDENCE BOULEVARD

DELTONA, FLORIDA 32725

City of Deltona

2345 Providence Blvd.
Deltona, FL 32725

Agenda Memo

AGENDA ITEM: D.

TO: Mayor and Commission **AGENDA DATE:** 12/12/2016

FROM: Jane K. Shang, City Manager **AGENDA ITEM:** 11 - D

SUBJECT:
Public Hearing - Request for Approval of the Program Year 2015-2016 CDBG Consolidated Annual Action Performance and Evaluation Report (CAPER) - Ron Paradise, Assistant Director, Planning and Development Services, (386) 878-8610.

Strategic Goal: Internal and External Communication - Conduct a needs assessment for social services and communicate resources for public benefit.

LOCATION:
City-wide

BACKGROUND:
The U.S. Department of Housing and Urban Development (HUD), requires the CAPER to be submitted annually to remain federal grant compliant. The CAPER is a summary of City activities accomplished under Title 24 of the HUD-funded Community Development Block Grant (CDBG) program. The CAPER report is formulated in accordance with the regulations governing consolidated submissions (24 CFR 91.520) administered by HUD. The main purpose of the CAPER is also to report the City's proper use of HUD funds for activities and projects accomplished within the HUD program year (PY). For this PY, the majority of the activities include park improvements and public services for enhance and serve the community.

The CAPER is associated with the CDBG Five-Year Consolidated Plan (CP) that establishes strategic goals for City CDBG activities listed in the Annual Action Plan (AAP). The current CP for PY 2013-2017 and the AAP is updated annually to report the implementation of the CP for grant compliance and consistency. The CAPER consists of narratives and tables documenting the proper spending of grant funds and highlights efforts made by the City to improve its quality of life. Finally, in accordance with the required citizen participation plan, the City has observed a 15-day public comment period and no comments were received verbally or in writing during the period. The PY 2015-2106 CAPER is attached.

COST:
N/A

SOURCE OF FUNDS:
HUD CDBG Grant Funds

ORIGINATING DEPARTMENT:

AGENDA ITEM: D.

Planning and Development Services

STAFF RECOMMENDATION PRESENTED BY:
Ron Paradise, Assistant Director, Planning and Development Services. Staff recommends that the City Commission approve the request to submit the PY 2015-2016 CDBG CAPER to HUD.

POTENTIAL MOTION:
“I hereby move to approve the request to submit the Program Year 2015-2016 CDBG CAPER to HUD.”

CAPER

PY 2015/2016

CITY OF DELTONA

Consolidated Annual Performance and Evaluation Report

MAYOR

AND

COMMISSIONERS

Mayor, John Masiarczyk, Sr.

Vice Mayor, Chris Nabicht, District 6

Mitch Honaker, District 1

Anita Bradford, District 2

Heidi Herzberg, District 3

Christopher Alcantara, District 4

Brian Soukup, District 5

2345 PROVIDENCE BOULEVARD
DELTONA, FLORIDA 32725

TABLE OF CONTENTS

EXECUTIVE SUMMARY ---------- Pg. 3
Resources and Distribution of Funds ---------- Pg. 3

SECTION I: OVERVIEW

1. Introduction ---------- Pg. 4
2. Assessment of Relationship of Funds to Goals ---------- Pg. 5
3. Review of Why Goals Were Not Attained ----------Pg. 7
4. Funding Priorities ---------- Pg. 8
5. Affirmatively Furthering Fair Housing ---------- Pg. 10
6. Impediments to Fair Housing ---------- Pg. 11
7. Actions to Overcome Impediments ----------Pg. 11
8. Leveraging Resources ---------- Pg. 12
9. Managing the Process ---------- Pg. 13
10. Citizen Participation ---------- Pg. 14
11. Institutional Structure ---------- Pg. 14
12. Monitoring----------Pg. 14
13. Self-Evaluation---------- Pg. 15

SECTION 2: HOUSING

1. Housing Needs---------- Pg. 16
2. Specific Housing Objectives ---------- Pg. 17
3. Public Housing Strategy ---------- Pg. 17
4. Barriers to Affordable Housing ---------- Pg. 17
5. Affirmative Action Marketing ---------- Pg. 18
6. Section 3 ---------- Pg. 18

SECTION 3: HOMELESS

1. Homeless Needs ---------- Pg. 19
2. Homeless Super NOFA ---------- Pg. 20
3. Specific Homeless Prevention Elements ---------- Pg. 20

SECTION 4: COMMUNITY DEVELOPMENT

1. Assessment of Plan Activities to Goals ----------Pg. 21
2. Carrying out Planned Activities ----------Pg. 23

ATTACHMENTS

Legal Ad Confirmation of Publication ----------Pg. 30
Contractor and Sub-Contractor Report ----------Pg. 31
Section 3 Reports ----------Pg. 33
PR01 HUD Grants and Program Income ----------Pg. 34
PR02 List of Activities by Program Year ----------Pg. 35
PR06 Summary of CON Plan Projects ----------Pg. 44
PR10 CDBG Housing Activities ----------Pg. 45
PR23 Summary of Accomplishments ----------Pg. 50
PR26 CDBG Financial Summary with Attachment ----------Pg. 54
City Commission CAPER Approval After Action Agenda----------Pg. 58

Executive Summary

The City of Deltona (City) is an entitlement community and is eligible to receive U.S. Department of Housing and Urban Development (HUD) funds. The City operates under a government comprised of an elected City Commission/Mayor and an appointed City Manager. The Mayor represents the City at-large and serves as the presiding officer at official meetings.

This CAPER represents the **third year** of the Five-Year Consolidated Plan (CP) for the City. The new CP for the period 2013-2017 was submitted and approved in August 2013 under the new HUD e-Con Planning Suite. The CP identifies the long-term priorities of the City, as it relates to addressing identified needs and HUD funds will be utilized to address those needs. Deltona received federal funds from the Neighborhood Stabilization Program (NSP), as well as Community Development Block Grant (CDBG) funds. With these combined funds, the City has undertaken a range of projects, including acquiring and rehabilitating homes, public service activities, and public facility improvements.

During program year 2015-2016, the City received $449,626 in funds from the CDBG Program. In addition, while NSP1 and NSP3 activities are diminishing, at the beginning of the program year there was approximately $1.3 million available for the purchase and rehabilitation of foreclosed properties.

Community Development Block Grant Funds	$ 449,626
NSP 1 Program	919,645
NSP 3 Program	436,911
Total CDBG Grant and NSP Program Income	$1,806,182

Table 1

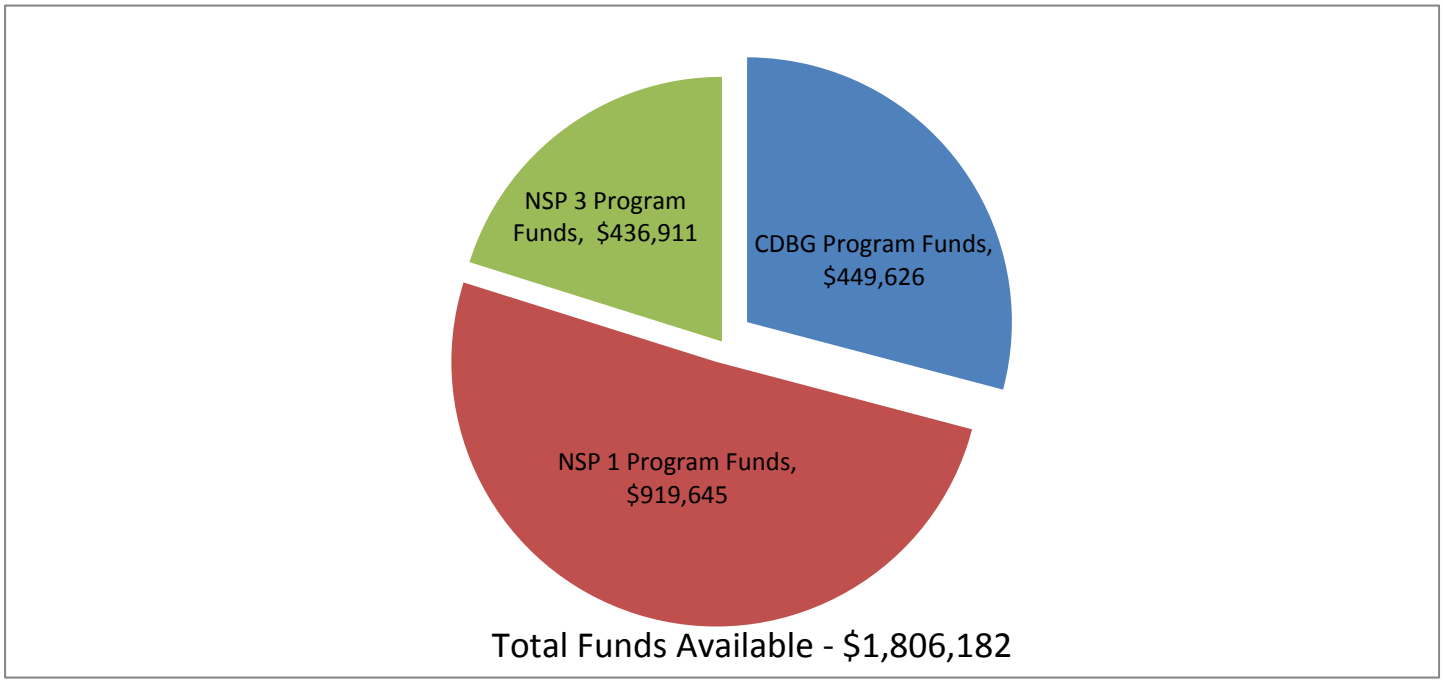

SECTION 1: OVERVIEW

1. Introduction

The formula-based allocation for PY2015/16 from HUD for CDBG was $449,626. In addition, the City had carry-over funds from the prior period in the amount of $348,312, making a total of $797,938 available for budgeting/re-budgeting. The standard process of allocating HUD funds to City projects includes a public service funding limitation of 15%, or a total of $67,315; and a cap of 20%, or a total of $89,925 for administration. The remainder of the funds were applied to public facility and housing activities. The capped amounts do not include funds carried-over from public services and administrative activities.

The projects/activities selected were based upon the City's needs and the Capital Improvements Program. The City decided to continue utilizing CDBG funds to further public facilities by improving City parks needing new facilities. This year we also received an increase in funds from the Florida State Housing Initiatives Partnership (SHIP) program to repair existing homes and assist first-time homebuyers purchase a new home. For this reason, we have diverted CDBG funds typically used for home repairs and other community needs.

Table 2

Category	Funds Committed	Funds Expended
ADMINISTRATION	$ 89,925	$ 54,761
PUBLIC SERVICE	$ 67,315	$ 66,674
HOUSING ACTIVITIES	$ 264,275	$ 225
PUBLIC FACILITIES	$ 376,423	$ 167,883
TOTAL	$ 797,938	$ 289,543

Table 3

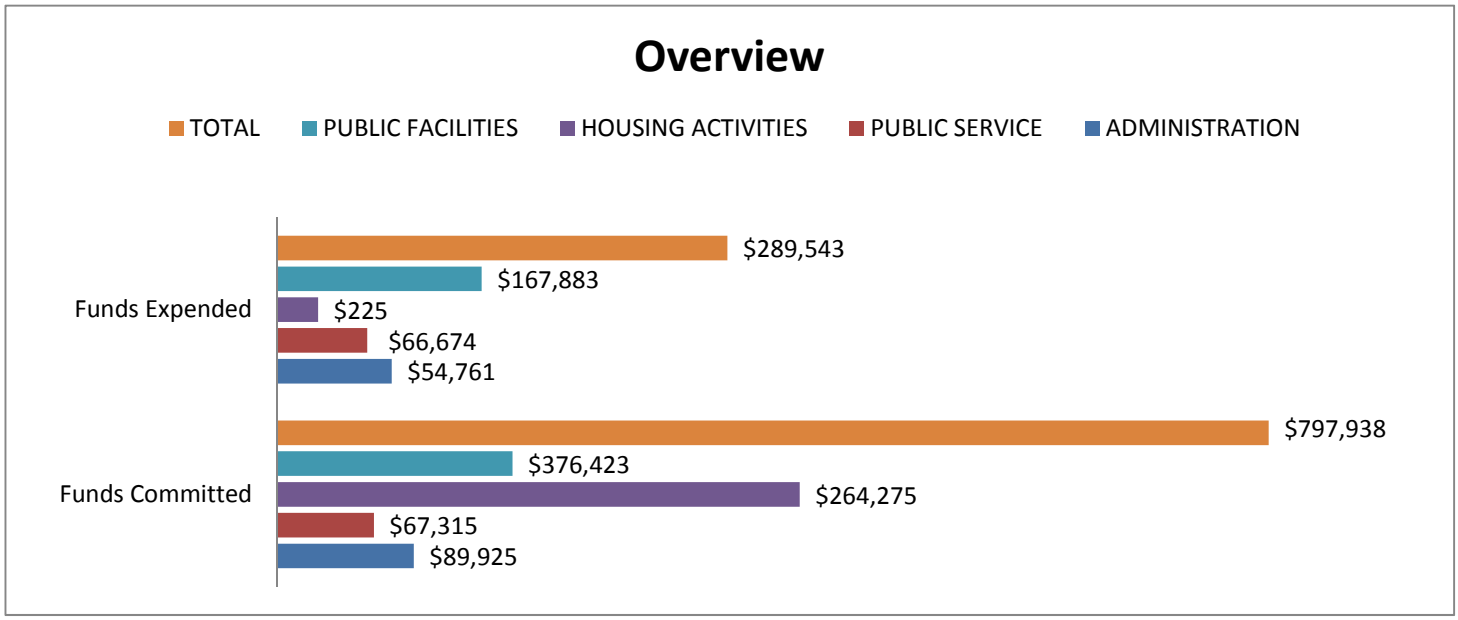

2. **Assessment of Relationship of Funds to Goals**

a. Describe the accomplishments in attaining the goals and objectives for the reporting period.

PUBLIC SERVICES

The City continues to partner with local agencies that are committed to providing services to enhance and empower Deltona residents. Services include fostering independence and self-sufficiency and providing opportunities for growth. Through the establishment of community partnerships, the City is able to achieve a far-reaching, positive impact.

Public service partnerships also provide non-profit organizations and other contracted agencies an opportunity to showcase their community services. The relationships are invaluable for both the City and the program participants to promote viable, efficient and accommodating services in the areas of elderly support, childcare, after school mentoring, scholarships for students, and homeless prevention.

Regarding the public service activity, the City is pleased to report a 99% activity completion rate for the current program year. This ratio indicates that a majority of the available funds were expended.

PUBLIC FACILITIES

1. The Campbell Park Basketball Court reconstruction was completed. The original basketball court was constructed over 20 years ago and needed to be replaced. The playing surface was deteriorating, rendering it a hazard. A handicap side-walk has been added to increase accessibility to the basketball court.

2. The Lake Butler Skate Park playground equipment was deteriorated and posed a safety hazard for children. The City replaced it with American Disability Act (ADA) compliant equipment. As of September 30, 2016, the pour-in-place surface will be installed underneath the playground equipment in November 2016. The new surface is an excellent enhancement for injury prevention.

3. Dewey Boster Sports Complex is our most used City-park, frequented by 150 to 500 residents daily, and in need of additional parking spaces. CDBG funds were used to clear and haul debris to make spaces for parking for the numerous park venues throughout the year.

4. CDBG funds were also used to replace an outdated chain-link fence at the Dewey Boster Sports Complex. The new fence is a six (6) foot black commercial grade aluminum fence.

Suitable Living Environment (SL-1, SL-2, SL-3)

- Provide ***accessibility*** for the purpose of creating suitable living environments.
- Provide ***affordability*** for the purpose of creating suitable living environments.
- Provide ***sustainability*** for the purpose of creating suitable living environments.

Decent Housing (DH-1, DH-2, DH-3)

- Provide ***accessibility*** for the purpose of creating decent affordable housing.
- Provide ***affordability*** for the purpose of creating decent affordable housing.
- Provide ***sustainability*** for the purpose of creating decent affordable housing.

Expanding Economic Activities (EO-1, EO-2, EO-3)

- Provide ***accessibility*** for the purpose of creating economic opportunities.
- Provide ***affordability*** for the purpose of creating economic opportunities.
- Provide ***sustainability*** for the purpose of creating economic opportunities.

Table 4

	Specific Objective	Funding	Performance Indicator (s)	PY15/16 Goal	PY15/16 Actual
DH-2	To provide rehabilitation of single family-units of owner-occupied, low income households.	CDBG	The number of housing units rehabilitated.	14	0
SL-1	To provide hunger and homeless prevention services. Community Life Center	CDBG	The number of persons with access to new and improved services.	895	536
SL-1	To provide mentoring for high school/middle school girls addressing academic and social behaviors. New Hope.	CDBG	The number of persons with access to new and improved services.	30	34
EO-2	To provide daycare and early academic intervention for income eligible families. ELC.	CDBG	The number of persons with affordable new and improved services.	67	369
SL-1	To maintain the Family Place and provide access to community resources. Healthy Start	CDBG	The number of persons with affordable new and improved services.	480	252
SL-3	Improve quality of neighborhood facilities for low income persons with new playground equipment. Lake Butler Skate Park.	CDBG	The number of persons with improved access to suitable living environment.	3515	3515
SL-3	Improve quality of neighborhood facilities for low income persons with new aluminum fence. Dewey Boster Sports Complex	CDBG	The number of persons benefitting from new and improved services.	70,000	70,000
SL-3	To provide recreation and exercise programs for senior citizens. COA.	CDBG	The number of persons with access to new and improved services.	625	526
EO-2	To provide eligible high school students with opportunities for continued education and employability. Futures Foundation.	CDBG	The number of persons with new and improved access to services.	12	70
SL-1	To provide hunger and homelessness prevention services. Neighborhood Center.	CDBG	The numbers of persons with new or improved access to services.	120	260
SL-3	Improve quality of neighborhood facilities for low income persons with additional parking area. Dewey Boster Sports Complex	CDBG	The number of persons with access to suitable living environment.	70,000	70,000

3. **Review of why goals were not attained:**

Specific program goals that were developed in advance of the program year were consistent with the priority of needs. Therefore, the goals set were realistic. Due to the economic climate, housing conditions and other uncontrollable factors, goals can be affected and/or unrealized because of the nature of the occurrence. An unexpected increase in the funding of the Florida SHIP changed our spending strategy for residential owner occupied repairs. In an effort to meet the numerous set-asides required by the State, our housing projects have been funded by SHIP funds. As a result, CDBG funds that have previously been committed to home repairs have been redirected to improve our aging parks facilities.

The City contracted with two new sub-recipient grantees for public services. The expected number served exceeded the actual outcome. As a newcomer, they may not have had a sufficient body of experience to accurately gauge the outcome and were overly optimistic. Overall, the City experienced minimal incidents of unrealized goals and several occurrences of exceeding goals.

How recipient will change based on experiences:

The City uses the Five-Year Plan in conjunction with other mechanisms, such as labor market and statistics information, survey of resident needs, independent market conditions, etc. to determine the methodology and techniques needed to carry out the mission. The system of delivery has proven to be a successful tool in meeting the objectives of program goals. The City will periodically review the results to ascertain the need to adapt a new or different strategy or approach.

Beginning in Program Year 2015/2016, the City created a project timeliness assessment that is unique to specific projects. It has been our experience that some of the programs are of a limited duration and can typically be accomplished within a few months. Allowing a shorter completion timeline provides an opportunity for staff to evaluate the contract to determine if there is ample time to perform the activity or if more time is needed. If the project is complete and funds are remaining, **then** it is possible to transfer funds to another project. This is just one way of identifying changes in programs.

Also, going forward into the next program year, the City will limit the number of sub-recipient service providers in order to minimize the use of additional administrative resources (staff time) needed to conduct technical and programmatic requirements. Although the grant funds are relatively small in amounts, the management time needed for a small grant and a large grant administration is essentially the same.

The 2008–2012 Consolidated Plan prioritized the need for stormwater improvements after the series of tropical weather events in 2008. Many of those projects were completed in past year. Now, the City has been addressing improvements needed to City parks and recreational facilities for the betterment of the community. Aging equipment and a lack of parking capacity present a risk of injury to our citizens. In an effort to meet the needs of the senior population in Deltona, the City is also collaborating with the Council on Aging to support the construction of a community center. CDBG funds are committed to construction of an area within the community center that has been designated strictly for activities for senior citizens.

Funding Priorities

Table 5

Funding Priorities for 2013-2017 - CDBG Five Year Plan					
Activity	**2013/2014 Estimated Funding**	**2014/2015 Estimated Funding**	**2015/2016 Estimated Funding**	**2016/2017 Estimated Funding**	**2017/2018 Estimated Funding**
Public Infrastructure Improvement	$100,000	$100,000	$100,000	$100,000	$100,000
Public Facilities	$145,000	$145,000	$145,000	$145,000	$145,000
Housing Rehabilitation	$ 52,000	$ 52,000	$ 52,000	$ 52,000	$ 52,000
Public Service	$ 66,000	$ 66,000	$ 66,000	$ 66,000	$ 66,000
Program Administration	$ 90,000	$ 90,000	$ 90,000	$ 90,000	$ 90,000
Total Allocation of CDBG Funding	$453,000	$453,000	$453,000	$453,000	$453,000
Source: City of Deltona – 2013-2017 CDBG Consolidated Plan					

Table 6

Public Infrastructure Improvement	**Public Facilities**	**Housing Rehabilitation**	**Public Service**	**Program Administration**	**Total 5-year Funding**
$500,000	$725,000	$260,000	$330,000	$450,000	$2,265,000
22%	32%	11%	15%	20%	100.00%

Table 7

Activity	**2015/2016 *Estimated* Funding from CDBG Five Year Plan**	**2015/2016 *Actual* Funding**
Stormwater	$100,000	$0
Public Facilities - Parks	$145,000	$240,000
Housing Rehabilitation	$ 52,000	$52,386
Public Services	$ 66,000	$67,315
Program Administration	$ 90,000	$89,925
Total Allocation of CDBG Funding	$453,000	$449,626

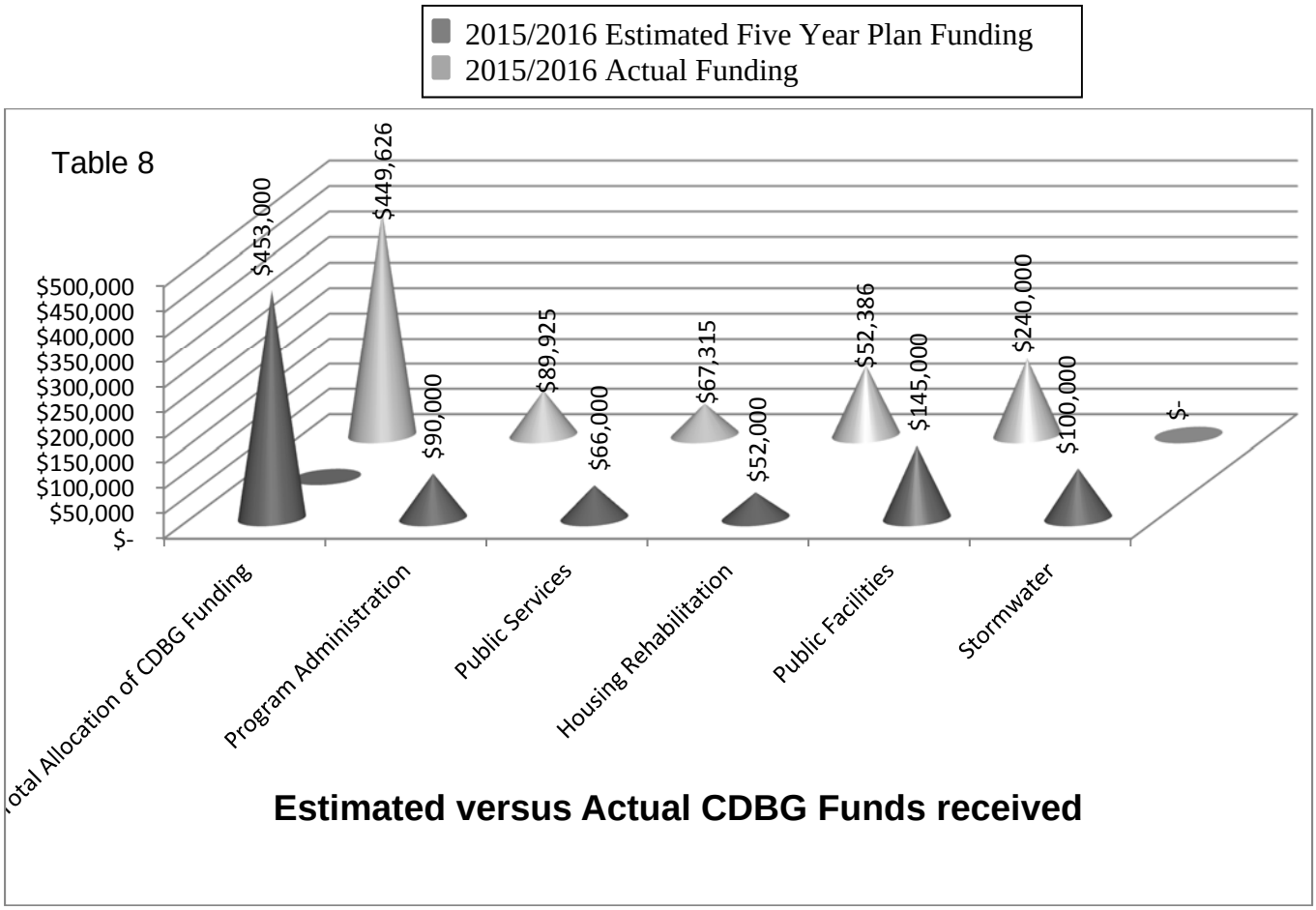

a. Provide a breakdown of the CPD formula grant funds spent in attaining the goals and objectives.

Deltona as an entitlement jurisdiction receives funding directly from HUD. Thus, the City is required to submit an Annual Action Plan (AAP) to HUD identifying the projects and activities that are scheduled for implementation during the course of the year and, upon implementation, the City is required to report on performance objectives. Listed below is a breakdown of the expenditures for 2015-2016 fiscal year. Table 9 below illustrates the funds expended from only the 2015/2016 program year allocation. In total, the City expended funds from the 2015/2016 funds and also expended funds from prior years. The total funds expended is $289,543 are illustrated on Table 2 on page 3.

Table 9 **FY2015-2016 CDBG Expenditures (From PR06)**

Administration	**$54,760**
Housing	**$0**
Stormwater	**$0**
Public Services	**$66,674**
Public Facilities - Parks	**$159,082**
Total	**$280,516**

Housing Goals from Consolidated Plan

Table 10 – SP-45 Five Year Consolidated Plan

Priority Need	5-Yr Total	Yr.1 Goal	Yr. 2 Goal	Yr.3 Goal	Yr. 4 Goal	Yr. 5 Goal
Acquisition of existing owner units	8	2	3	1	2	0
Production of new owner units	5	0	0	3	2	0
Rehabilitation of existing owner units	19	7	6	1	2	3
Homeownership assistance	**32**	**9**	**9**	**5**	**6**	**3**

Provide for household repairs for homeowners up to 80% of the median income.

5. Affirmatively Furthering Fair Housing

The City has been actively engaged in sponsoring and participating in events centered on the furtherance of fair housing. Recently, HUD has worked toward the creation of an expansive, systematic approach in dealing with fair housing initiatives from educating the public to documenting and reporting actions, obstacles, and advances in the area of fair housing.

In addition to public education, the City has provided a link on its webpage to contact information for those who believe they have been a victim of biased or unfair treatment as it relates to housing. This information is in regards to what constitutes unfair housing practices and what to do in the event someone detects or feels that they are a victim of unfair housing actions. In addition, applicants are enrolled in a homebuyer education program receive information regarding fair housing as part of the curriculum. To date, the City has not had any actions to report relating to fair housing concerns.

Deltona ensures potential homebuyers are well educated about the subtle or not-so-subtle discriminatory practices that can be part of the home-buying experience. Realtors who are contracted with the City to sell homes are well acquainted with the rules and regulations as it relates to fair housing. Other actions taken as a precaution deal with applicants who are coming into the program with selling agents who are not involved the City NSP program. Staff ensures that no house-steering has taken place. Equal access to housing opportunities for the disabled, veterans, minorities, or any other group is ensured by staff persons who review each case on an individual basis. For example, the City has completed rehabilitation for disabled clients who had purchased an NSP home. The City of Deltona is a recipient of the Florida State Housing Initiative Partnership funds and has successfully met the new legislation requirement to expend 20% of the grant funds on persons who are developmentally disabled for program year 2015/2016. The City collaborates with other housing partners, i.e., Rural Development, Veterans Affairs, etc., to maximize benefits for the disabled.

In summary, every effort is made to provide fair and affordable housing to those who come to the City seeking housing opportunities. The City aims to ensure potential clients have relevant information about all aspects of housing prior to purchasing. The intent is to help clients avoid decisions that would place

them at-risk for foreclosure. For future plans, as the new directive for fair housing is implemented, the City will become more engaged in strategizing approaches to eliminate discrimination in housing.

6. Impediments to Fair Housing

This current program year is the third year of the Five-Year Consolidated Plan. The impediments addressed previously were:

- Lack of adequate infrastructure to support housing, including a poorly developed sewer system, drainage problems, and limited transportation options for residents to access goods, services, and employment.
- The limited capacity to increase the flow of information pertaining to housing choice and options to homebuyers as well as the business community involved in housing aspects.
- Unavailability of a variety of housing stock options for residents to choose from. As part of the formulation of the Five-Year Consolidated Plan, the City hired a consultant to prepare an analysis of impediments to fair housing report. The Dallas-based consultant indicated that, in general, the City had "…relatively few impediments to fair housing." Nevertheless, the consultant did identify five impediments to fair housing within the City, as summarized below:

1) Real Estate Impediments: Various dynamics fall under real estate impediments including the cost of dwellings, barriers to financing, low incomes, development constraints, and a lack of funds for affordable housing.
2) Public Policy Impediments: Perceived lack of general public knowledge about fair housing rights and a lack of multi-modal transportation choices including limited transit opportunities.
3) Banking, Finance, Insurance and other Industry Related Impediments: Negative fallout from subprime lending and related increased foreclosure activity and predatory lending.
4) Socio-economic Impediments: Aging population, lack of units suitable for persons with disabilities, homelessness, language barriers, single parent households, and unemployment.
5) Neighborhood Conditions and Related Impediments: Limited public assistance resources to help maintain homes and promote neighborhood stability.

7. Actions to Overcome Effects of Impediments

Deltona continues to seek ways to implement the Analysis of Impediment to Fair Housing with the intent of reversing the impediments to housing. An example is contracting with agencies and organizations that have demonstrated a similar interest in removing barriers and seeking opportunities to properly address the impediments. More specifically, the City has contracted with non-profit organizations that provide financial or credit counseling to help homeowners get back on track with their finances. The City has also partnered with housing agencies that provide client intake, screening, and eligibility services.

The City also runs public service ads on Deltona TV in English and Spanish to reduce obstacles for residents with limited English proficiency, elderly, and disabled. Our Community Development Section uses a bilingual City employee to ensure that our services are accessible to the Spanish population. City staff volunteer on the Volusia/Flagler Continuum of Care boards to insure we are up to date and current for services for the homeless and disabled.

In addressing the supply of housing stock options, the City has continued to operate the NSP 1 and NSP 3 programs. The NSP is designed to provide affordable housing opportunities to eligible

homebuyers by giving down payment assistance and closing costs. The City is approaching close - out of the NSP 3 program and has a limited supply of homes at this current time. Homeownership is also a part of the City housing strategies through the SHIP Purchase Assistance Program.

OTHER ACTIONS

Meeting the needs of the underserved:

The City makes every effort to meet the needs of its residents. Many initiatives directed at improving the overall housing/economic condition of Deltona are given top priority. Still, the greatest challenge and threat to suitable living conditions continues to be a soft job market and rising home prices. The job market for the Central Florida area has improved. However, there are still many area residents without jobs or are under-employed. When jobs are available, they are generally located out of the area and without well-developed public transportation options, so that access to these jobs is a problem.

The City is constantly seeking creative ways of helping clients get over the financial problems that prevent them from purchasing homes including the following:

- Establishing partnerships with non-profits and private agencies to conduct homebuyer education and home maintenance workshops.
- Securing partnerships through local banks to work with the NSP and the SHIP Programs.
- Providing funds for area non-profit agencies to promote job training and employment skills training.

Homeownership is becoming more of a reality now for persons who were once unable to obtain a loan, due to low credit scores or other problems. In part, because of funds available from federal programs. Homeownership is more attractive for renters. In most cases rents are now higher that the average monthly mortgage payment. Through down payment assistance, including helping with closing costs, much of the up-front cost burdens typically associated with purchasing a home are addressed. Through the use of federal assistance, homebuyers now have access to funds which would not have otherwise been made available to them.

There are needs, other than housing, in which the City attempts to address through leveraging of funds or through coordinated efforts with non-profit agencies. The City recognizes the need for more social services, including after school/educational programs, homelessness prevention services and activities for the elderly persons, within the limited resources available. Through interaction, referrals and monetary assistance i.e. foreclosure prevention, the intended outcome is independence and self-sufficiency.

8. <u>Leveraging Resources</u>

a. Public and private resources.

The City applied and was awarded a new grant through the State of Florida Division of Emergency Management entitled the Residential Construction Mitigation Program. The grant is to support programs intended to improve hurricane preparedness to reduce loss from a hurricane. The funds are appropriated to support research into ways to reduce loss due to hurricanes; to implement outreach campaigns to educate the public on mitigation techniques to retrofit structures; and to protect local infrastructure from potential damage from a hurricane.

The City has not sought resources through grants from agencies such as the Department of Energy, State of Florida Department of Economic Opportunity, Elder Affairs or the local United Way, using HUD grants as leverage. Most leveraging is provided with sub-recipient grants under public services, where agencies are required to demonstrate that, at a minimum, have sought funding through other private or public entities prior to applying for funds through the City.

However, for projects such as housing repairs, the City is able to refer applicants to local area non-profit organizations who will provide some of the repairs needed. In the case of childcare and elderly services, the City was able to defray some of the costs because of funding from state organizations.

The City also supported a local Low Income Housing Tax Credit (LIHTC) developer by approving their application to build a senior LIHTC facility. At this time, the developer has not obtained LIHTC funding from the State. We will continue to support private sector affordable housing initiatives and expect other LIHTC developers to apply within the future.

b. HUD Leveraged with public/private resources.

With regard to public service activities, HUD funds were leveraged with both public and private funds based on the fact that sub-recipients are leveraging their independent funds as well as funding from other public venues. In cases where HUD funds are used as seed money with new agencies, volunteer hours and in-kind donations are used as leverage. The City receives approximately $65,000-$75,000 through entitlement allocation based on 15% of the grant each year. On an annual basis, the City has typically funded from six to eight sub-recipients. Therefore, leveraging of other funds has played an important role. The City utilized CDBG funds to leverage its general funds for the completion of parks and recreation projects, and other initiatives. CDBG funds were also leveraged with private funds to sponsor training programs and for the mentoring of underserved youth in the City.

c. Matching requirements.

The City utilizes only CDBG funds. The City receives no HOME funds from HUD and a match component would not be applicable.

9. Managing the Process

a. Compliance with program and comprehensive planning.

The City is required to submit a Five-Year Consolidated Plan outlining the priorities, goals, and funding it will utilize to meet those goals. Consistent with those requirements, the City's current Five Year Plan is effective for the 2013-2017 timeframe. The City is also required to submit an Annual Action Plan to indicate proposed projects for the particular given year. Additionally, any substantial amendment to the Annual Action Plan is advertised consistent with the Citizens Participation Plan. The Program Year 2015/2016 Annual Action Plan has been approved by HUD, and the associated grant agreements have been signed.

Program aspects include percentage caps that must be adhered to in order to be compliant. The City received $449,626 for the current year. However, the public services category cap is 15% of the grant allocation. The administrative cap is 20% of the allocation to manage the CDBG program. Listed below is the cap amount and the total amount expended for this program year.

Table 11

CDBG Activity	Cap % based on $449,626	Cap amount	Amount expended
Administration	20%	$89,925	$54,760
Public Services	15%	$67,444	$66,674

The City is also required to prepare quarterly, semi-annual, and annual reports for different activities in the CDBG Program. Reports such as Contract and Subcontract Activity, Labor Standards and Section 3, Federal Financial Report are examples.

10. Citizen Participation

a. Summary of citizen comments.

In accordance with the Citizen Participation Plan, the City publishes notices of funding availability, including the sources and anticipated uses of funds. Every opportunity is given to citizens to comment and express their views about the use of funds. Any comments received, whether oral or in writing, are recorded, reviewed and considered for the administration and implementation processes.

An advertisement was published in the Daytona Beach News-Journal on Sunday, November 27, 2016, on Wednesday, November 30, 2016, to inform the public of the Consolidated Annual Performance and Evaluation Report (CAPER) availability for their review. Further, the City has made the document available on its webpage and at City Hall. The City provided performance reports and budget information for the review process, along with projects/activities, areas of distribution and types of services. There were no comments made pertaining to the CAPER for Program Year 2015/2016.

11. Institutional Structure

a. Overcoming gaps in institutional structure.

There is a great need for various types of services in the Deltona area. The City often times receives calls for persons who are in need of different types of social services. In an effort to address some of the needs, the City collaborates with social agencies, non-profit organizations, and other community partners to coordinate services aimed at addressing public service need. To this end, the City of Deltona organized a Social Service Summit to identify the existing social services being offered to Deltona residents by local non-profit, faith-based organizations, neighboring municipalities and the County. By identifying the social services needs of the Deltona residents, the City aims to determine a methodology and format to provide social services to the maximum potential going forward and to establish dialogue between the groups providing services.

12. Monitoring

a. How and frequency.

City staff uses a variety of methods of monitoring and assessments to ascertain if projects and activities are carried out in a manner that meet program requirements including national objectives. The Community Development Section staff works closely with contractors, sub-recipients, realtors, and other City departments to ensure compliance with local codes, ordinances and other regulations.

Site visits are periodically conducted; desk reviews are performed each time invoices are submitted for contractual reimbursements; and annual program monitoring is performed where a comprehensive assessment of programmatic, administrative and fiscal reviews of the entire project is carried out. HUD periodically schedules on-site monitoring of its entitlement communities and the City was selected for a review of CDBG program compliance in June 2014. The monitoring identified specific projects for review, as well as overall administration of funds.

b. Results.

In addition to the desktop reviews which are done monthly, the City also conducts on-site visits to ensure that all program recipients/activities are in compliance with programmatic requirements. All sub-grants were monitored by in-house staff which are trained in the CDBG Program and have performed monitoring previously.

Overall, the monitoring suggests that the sub-recipients have properly utilized the information presented in the technical assistance workshops and through other mechanisms. Projects for public facilities, and public services were all completed prior to the end of the program year. Finally, the City has complied with draw-down requirements and has also achieved on the timeliness of expenditures. The City's financial records and IDIS are reconciled and reported monthly. During the 2013 program year, a representative from the HUD Jacksonville office conducted an on-site monitoring of the City's CDBG program. The results of the evaluation were no findings or concerns.

13. Self- Evaluation

a) Four of the greatest concerns the City faces are:

1. Lack of a well-designed infrastructure system to properly address the needs of the community.
2. Insufficient number of local social service providers to assist citizens.
3. Aging housing stock and limited local job opportunities.
4. Obsolete public facilities, including parks.

In an effort to address these areas and to effect positive change, the City has utilized CDBG funds to implement activities to upgrade and install new stormwater management infrastructure. The City has repaired and replaced outdated and worn equipment located at public parks to avoid injury and mitigate liability. The City has also contracted with several non-profit agencies to bring services to the Deltona area and to pool those services to better fit the Deltona area. The City operated an owner occupied home repair program to help residents.

b) Deltona has utilized a thorough process and combined a variety of resources to achieve the goals identified in the Five-Year Consolidated Plan. Through working in conjunction with housing agencies, community development providers, and others, the City has achieved the goals contained in the Annual Action Plan for this program year.

c) Decent housing was promoted through the provision of owner occupied rehabilitation activities to benefit the low income population. Quality housing was also maintained utilizing a counseling program that addresses credit repair and homeownership. Expansion of economic opportunities was addressed by contracting with agencies to provide employability training programs. In addition, through the use of CDBG funds, after-school program staff and staff at the senior center were able to continue retain their jobs because of the funds received.

d) Due to the implementation of projects and activities listed in the Consolidated Plan, the City was able to stay on task with plan implementation. Residents benefitted from infrastructure upgrades and public facility improvements. Eligible families were able to enroll their children in after-school programs. Elderly citizens seeking social interaction, physical and cognitive activities enjoyed the services at the senior center and at risk teens participated in an academic and social behavior mentoring program. Income eligible high school students received scholarships for higher education. Finally, those at risk for homelessness have found food, utility and rental/mortgage assistance.

e) The indicators providing the best results would be those which show an increase in skills for job training.

f) The most negative impact, without question, is the decrease in funds available from all sources, Federal, State and local governments. Resources that were once plentiful, simply are harder to come by now. Funds are subject to cuts and with that, programs and activities must also be scaled back. However, there has been an increase in State funding for housing programs.

g) With the addition of NSP 1 and NSP 3 funds, the City found it necessary to shift priorities in order to achieve the 25% set aside requirement for expending funds on families with incomes 50% or lower than the median income. The Community Development Department has met and remains in compliance with the NSP set aside requirement.

h) The City is focusing on park facility projects to meet a greater need in the City. In housing, with the NSP programs approaching close out, the City has redirected SHIP funds to down-payment assistance to continue meet to the housing needs in our community.

Lead-Based Paint & Evaluate and reduce lead-based paint hazards.

Deltona is contracted with companies to perform lead-based paint analysis on each City house constructed prior to 1978. In cases where rehabilitation work is performed, the inspector will conduct an inspection for lead-based paint. If there are concerns, tests will be conducted to determine if abatement is necessary.

SECTION 2: HOUSING

1. Housing Needs

Foster and maintain affordable housing.

Deltona maintains partnerships with area banks, realtors, and contractors to address affordable housing issues. Likewise, the City has been responsible for:

Facilitating and coordinating efforts to continue to educate potential homebuyers about programs and providing credit counseling to prospective homebuyers.

- Offering emergency and minor repair/rehabilitation programs to eligible clients.
- The City's website links to community resources for eligible clients to help pay for insurance, taxes, utilities and mortgage assistance for foreclosure prevention and workshops.

2. Specific Housing Objectives

The specific objective of the housing program was to promote quality housing by providing rehabilitative repairs and emergency housing assistance. The 2015-2016 Annual Action Plan goal was to provide housing rehabilitation for 14 homeowners. Deltona has completed nine (9) homes; two (2) Very Low Income Households, and seven (7) Low Income Households.

Progress that meets Section 215.
Not applicable. The City does not have/manage any rental housing.

Efforts to address sub-standard (worst-case) housing.

As part of the desire to eliminate substandard housing, the City coordinates with other departments in identifying homes that are sub-standard. In doing so, the City Code Enforcement Division plays an important role by identifying such properties. Whenever a property is identified as a potential Code case, officials conduct an investigation to determine the reasons that homeowners are failing to be in compliance with City Codes. Depending on the circumstances, either the officer or the client contacts the City Community Development department. This way the City gains first-hand knowledge of potential clients; whether or not they are located within the CDBG target area; and a good idea of what it could possibly take for repairs.

Efforts to address needs of persons with disabilities.

This program year, the City had several clients who are disabled that benefited from the City's housing rehabilitation programs. The City of Deltona is a recipient of the SHIP funds and has successfully met the new legislation requirement to expend 20% of the grant funds on persons who are developmentally disabled for program year 2015/2016.

3. Public Housing Strategy

Improve public housing and resident initiatives.

Deltona was primarily built as a residential community, and for the most part, it remains as such. Currently there is no public housing in Deltona and inquires received by the City for rental or public housing are referred to Volusia County.

Although the City refers residents to Volusia County, both entities work together to find potential public housing/rental assistance prospects. Collaboration is important because oftentimes clients are in desperate need of housing. Even though the City has no resources, a listing of agencies providing various types of social services is made available.

4. Barriers to Affordable Housing

Eliminate barriers to affordable housing.

For most potential homebuyers, the most pressing need is to have down-payment funds available when there is an opportunity to purchase. Most people can afford the monthly payments, because they are, for the most part, already paying rent that is typically higher than most monthly mortgage payments. To alleviate this problem, the City does the following:

- Provides homebuyer assistance that is used for down payment and/or closing costs for properties.
- Provide credit counseling as a method to prepare the homebuyer for getting ready to purchase a home.
- Partner with lenders who are familiar with Federal housing assistance loans and can underwrite loans to clients that might have difficulty qualifying for a loan at other institutions.

A) Evaluate Progress toward meeting goals with HOME funds

Not Applicable, we do not receive HOME funds.

1. HOME Match Report ----------Not applicable
2. HOME MBE and WBE Report----------Not Applicable

5. <u>Affirmative Action (Marketing)</u>

Deltona markets its Housing activities for NSP, SHIP and CDBG through formal advertising in coordination with the City's Purchasing Department. Advertisement is made to encourage WBE's and MWBE's to participate in the bidding process. Different sources of publications are utilized, depending on the type of housing activities and the cost. Due to limitations of funds, the City sometimes uses the Internet and/or email blast to a number of businesses who have solicited for business within the City.

6. <u>Section 3</u>

Section 3 of the HUD Act of 1968 (regulations can be found at 24 CFR Part 135), requires recipients of Federal funding to comply with Section 3, to the "greatest extent feasible". The intent of Section 3 is to provide employment opportunities for the low and very-low income persons through the contracting and sub-contracting of projects awarded via Federal funds. The aim is to attract persons who are recipients of government assistance, whether it be for housing or business purposes to have the first opportunity for new jobs created with the use of government funds.

As part of procurement stages, including the advertisement for a project, the City includes in each RFP the fact that the project is a Section 3 project, thus providing opportunities to those in low-to very-low income categories. The City does not hire employees of the Section 3 requirement directly. The City passes the regulations down to the contractor and ensures that they provided the information necessary to solicit Section 3 hires.

The City requires each bid awarded of Federal funds, at the beginning of the project, and prior to the preparation of the purchase order, submit payroll information including the names, job title, and classification of persons who are presently employed both as a staff or a sub-contractor. This information is certified and sent to the City. During the project and at the conclusion of that project information is received and verified that no additional new hires have been employed.

In addition, the City requires each contractor post, in a conspicuous area at the site accessible for viewing by both employees and applicants, information pertaining to training, employment, and information describing the Section 3 preference.

SECTION 3: HOMELESS

1. Homeless Needs

Actions to address homeless persons.

As stated in the Five-Year Consolidated Plan, the five year goal for the Continuum of Care (CoC) is to work with the local agencies, who administer CoC services, to implement strategies with the intent of alleviating homelessness in Volusia County. The City continues to support the efforts of the Volusia Flagler County Coalition for the Homeless (VFCCH) as the lead agency in the County for homelessness activities. VFCCH conducts research on the homeless and compiles this information for the areas in the County. VFCCH then collaborates and establishes partnerships with other community service providers to more effectively address the needs of the homeless. VFCCH focuses primarily on the more concentrated area of Daytona Beach, as far as services are concerned. Daytona Beach remains the largest area within the county for the homeless population. The CoC also administers the Homeless Management Information System (HMIS) database for the local area.

Whenever the City receives inquiries or requests for homeless services, staff utilizes a list of providers that work in conjunction with VFCCH, to determine which collaborating agency will be more suitable for assisting with the need (including persons with HIV/AIDS) at hand. It is through these partnerships that needs, such as housing, medical, transportation, clothing, personal care, job training, and referrals are channeled. Homelessness comes in many forms. When the term homeless is used, images of the chronically homeless in a negative context are typically invoked. However, homelessness accounts for more than chronic cases. Many times the homeless include families that may even have a source of albeit modest income. These homeless have not crossed the threshold to a chronic state (and may never be considered chronically homeless) but find shelter with family and friends. The homeless population living with family and friends are not readily apparent in the community. There is no panhandling or outdoor sleeping. However, this homeless population does exist within the City.
In order to properly address homelessness in a community, a census effort needs to occur to attempt to ascertain the number and location of homeless populations. Annually, the VFCCH facilitates a Point in Time Survey in an effort to document the homeless population in Volusia County. The point in time survey consists of a two day count that occurred in multiple jurisdictions within Volusia County. The past low point in time count within the City and adjacent areas seems to suggest that the City of Deltona does not have a high population of homeless and that may be the case for chronically homeless. However, as discussed above, there is a population of homeless within the City residing with friends and family that is difficult to count. Documentation compiled by the Volusia County School District provides the most comprehensive data on the homeless population especially non-chronic homelessness.

Actions to assist in transition.

The City supports the actions of its service providers, as well as the Coalition for the Homeless, in its efforts to provide both emergency housing and transitional housing for the homeless. Public service participation in the HMIS is also strongly recommended.

2. Federal resources obtained from the Homeless Super NOFA.

For cities in Volusia County, the VFCCH is the agency through which homeless resources are applied and received, and the City has deferred to Volusia County and the VFCCH to operate their programs. Deltona participates with and supports the goals of the VFCCH.

3. Specific Homeless Prevention Elements.

Actions Taken to Prevent Homelessness

Although the City recognizes that there is a need to prevent homelessness, the City is limited in the ability to provide definitive measures to achieve this goal due to the amount of funds received. The homeless issue is complex and has become more complicated because the job market and escalating rents and home prices. However, the City does contract with non-profit agencies which provide job skills and training intended to equip participants with the minimal tools necessary to obtain and maintain employment. Likewise, the City also supports agencies that offer supportive employment in anticipation of preparing clients for transitional housing programs.

The City of Deltona has partnered with the Neighborhood Center of West Volusia and Community Life Center by awarding CDBG public service grants. The Neighborhood Center provides emergency shelter for individuals and families for up to 30 days and transitional housing for up to one year. The CDBG funds are used primarily for homeless prevention by assisting families with utility and rent/mortgage assistance. Transportation assistance, in the form of bus passes, enables workers to get to their job and food subsidies are among the services provided to residents.

Reduce the number of persons living below the poverty level.

The City has developed partnerships and contractual agreements to address certain needs pertaining to the initiative and the incentive to provide opportunities for persons in poverty to increase their livelihood by engaging in services designed to increase educational levels, job skills, or knowledge pertaining to finance/credit and housing/rental opportunities. As it relates to economic development and jobs, the City is actively seeking to expand its business development initiatives. Some jobs have been made available through new local businesses that in the last few years opened in the area. Some of the new business include medical facilities. The medical and healthcare industries typically provide better paying jobs with benefits. These medical orientated uses indicate an expanded local job base and higher wages.

SECTION 4: POSITIVE COMMUNITY DEVELOPMENT

1. Assessment of Plan Activities to Goals.

The City has designated areas meeting HUD requirements as it relates to identifying sections of the City that have relatively low income characteristics. Although the City is an Exception Area, meaning that it does not have the mandated 51% low income population overall, there are specific areas based on the 2010 Census, where the proportion of low income families ranges from 42% to 53%.

Efforts to provide services in the low income areas of the City (target area) are maximized to ensure program compliance serving the population of residents for whom the program was designed. The City's internal department works well with staff in adhering to projects in the target area and by following the Five-Year Plan concept. Target areas for Deltona are located in the northeast and southwest sections of the City. Currently, emphasis within the target areas has been placed on upgrading park facilities. Listed below is a map of the City's target areas with the most applicable projects depicted.

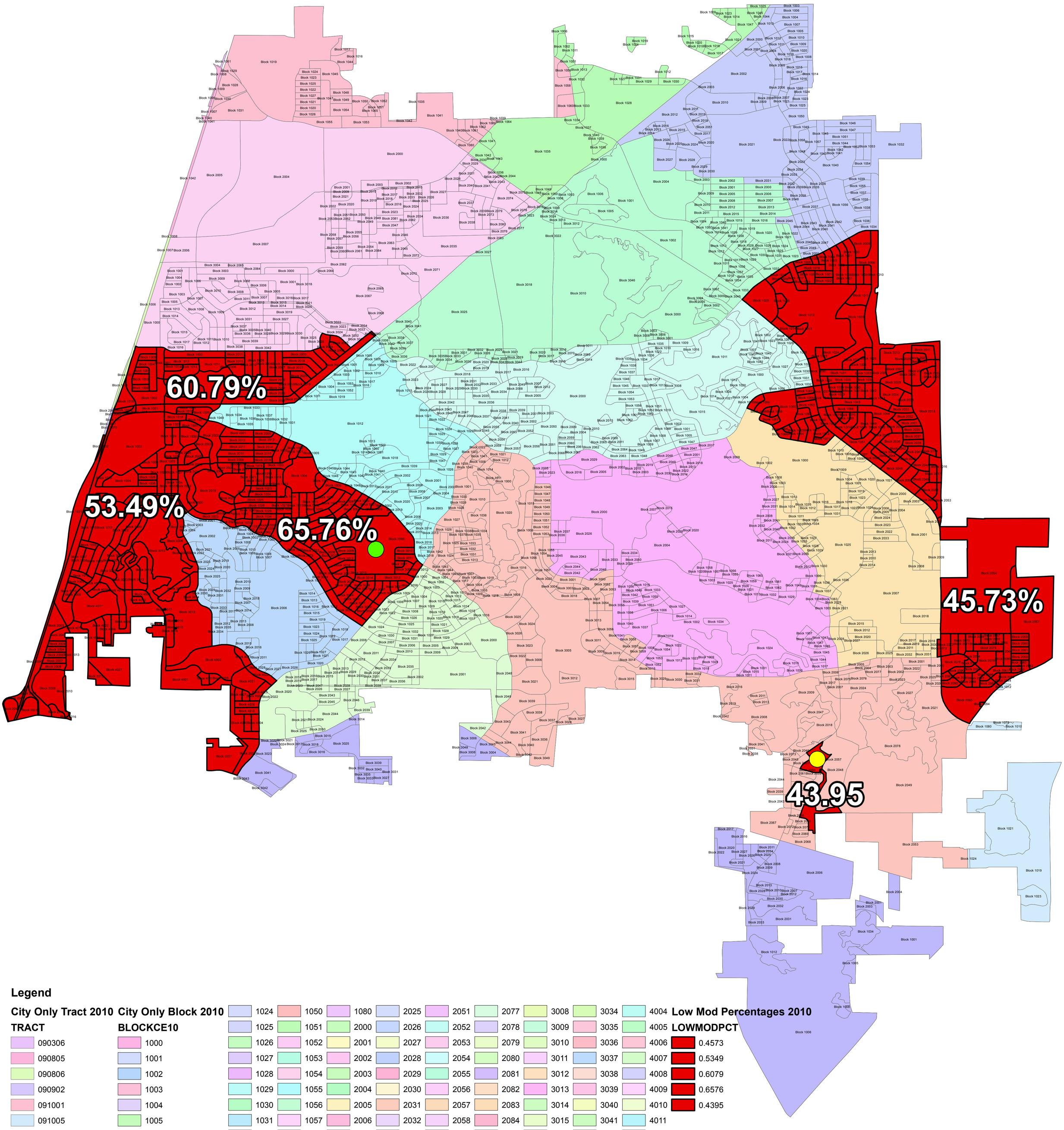

Legend

City Only Tract 2010
TRACT

- 090306
- 090805
- 090806
- 090902
- 091001
- 091005
- 091013
- 091015
- 091016
- 091017
- 091018
- 091019
- 091020
- 091021
- 091022
- 091023
- 091024
- 091025
- 091026
- 091027
- 091028
- 091029

City Only Block 2010
BLOCKCE10

1000, 1001, 1002, 1003, 1004, 1005, 1006, 1007, 1008, 1009, 1010, 1011, 1012, 1013, 1014, 1015, 1016, 1017, 1018, 1019, 1020, 1021, 1022, 1023, 1024, 1025, 1026, 1027, 1028, 1029, 1030, 1031, 1032, 1033, 1034, 1035, 1036, 1037, 1038, 1039, 1040, 1041, 1042, 1043, 1044, 1045, 1046, 1047, 1048, 1049, 1050, 1051, 1052, 1053, 1054, 1055, 1056, 1057, 1058, 1059, 1060, 1061, 1062, 1063, 1064, 1065, 1066, 1067, 1068, 1069, 1070, 1071, 1072, 1073, 1074, 1075, 1080, 2000, 2001, 2002, 2003, 2004, 2005, 2006, 2007, 2008, 2009, 2010, 2011, 2012, 2013, 2014, 2015, 2016, 2017, 2018, 2019, 2020, 2021, 2022, 2023, 2024, 2025, 2026, 2027, 2028, 2029, 2030, 2031, 2032, 2033, 2034, 2035, 2036, 2037, 2038, 2039, 2040, 2041, 2042, 2043, 2044, 2045, 2046, 2047, 2048, 2049, 2050, 2051, 2052, 2053, 2054, 2055, 2056, 2057, 2058, 2059, 2060, 2061, 2062, 2063, 2064, 2065, 2066, 2067, 2068, 2069, 2070, 2071, 2072, 2073, 2074, 2075, 2076, 2077, 2078, 2079, 2080, 2081, 2082, 2083, 2084, 2085, 2086, 2087, 2088, 2089, 2090, 2091, 2092, 2093, 2094, 3000, 3001, 3002, 3003, 3004, 3005, 3006, 3007, 3008, 3009, 3010, 3011, 3012, 3013, 3014, 3015, 3016, 3017, 3018, 3019, 3020, 3021, 3022, 3023, 3024, 3025, 3026, 3027, 3028, 3029, 3030, 3031, 3032, 3033, 3034, 3035, 3036, 3037, 3038, 3039, 3040, 3041, 3042, 3043, 3044, 3045, 3046, 3048, 3049, 3052, 3053, 3054, 3055, 3056, 3057, 3058, 3059, 4000, 4001, 4003, 4004, 4005, 4006, 4007, 4008, 4009, 4010, 4011, 4012, 4013, 4014, 4015, 4016, 4017, 4018, 4019, 4020, 4021, 4022, 4023, 4024, 4025, 4026, 4027

Low Mod Percentages 2010
LOWMODPCT

- 0.4573
- 0.5349
- 0.6079
- 0.6576
- 0.4395

Lake Butler Skate Park

Dewey O'Boster Park Location

N
W E
S

Source: US Census Bureau PL94-171 population and ethnicity data for City of Deltona, Volusia County, 2010
Prepared by City of Deltona GIS

2. Carrying out Planned Activities

Parks

As described previously, the City is in the process of rehabilitating/upgrading park facilities located at The Lake Butler Skate Park and Dewey Boster Sports Complex Park.

Housing

Housing needs are addressed in the Consolidated Plan and are based on the characteristics and general make-up of the community. Deltona is mostly comprised of single-family detached dwelling residential homes. Over the past few years, the City has received many applications for assistance from homeowners in need of various types of services. Funds to address housing needs have been limited because of cutbacks from both State and Federal governments. However, funding as part of the State SHIP program has recently increased. The City has a homeowner repair program, which is designed to address immediate, lower cost housing repairs such as septic, air conditioning, or roof repair; which is also funded through the CDBG program. Finally, there are opportunities to leverage funds to achieve performance objectives and to ensure that clients receive the assistance they require in addressing their needs.

Through the Neighborhood Stabilization Program (NSP), the City has been able to acquire homes for resale and make the dream of home ownership affordable and accessible for many deserving applicants. By using funds under both NSP1 and NSP3, the City has acquired homes that are in the target areas.

The Five-Year Consolidated Plan identified housing rehabilitation as the fourth priority for the City on its list of priority needs. Housing needs were based on community characteristics including a high percentage of renters, substandard housing, and other general housing matters. The City has been able to assist homeowners with CDBG funds. However, it was through the utilization of the Neighborhood Stabilization Program funds by which the City has made the greatest impact. This strategy was undertaken by purchasing, rehabilitating, and re-selling homes that were previously foreclosed. The City has responded remarkably well to the challenges of addressing the dramatic housing ills of the local community. Although NSP funds and expenditures are reported via a different system (Disaster Recovery Grant Reporting-DRGR), it is imperative that significant expansion and improvements in affordable housing have transpired due to the NSP funding awarded to the City.

Notwithstanding the improvements in the state of affordable housing facilitated by the NSP and SHIP activities, there is still demand for housing type initiatives. Listed below is a table summarizing the performance and accomplishments achieved regarding housing-activities.

Table 12

Activity	# of units projected	Actual number	Income Category: Very Low(VL) Low (L) Extremely Low (EL)	Completed(C) Underway(U) Cancelled (X)
Acquisition/NSP	0	1	EL = 0 VL = 0 L = 1	C = 0 U = 1
Housing Rehabilitation/NSP	4	3	EL = 0 VL = 0 L = 3	C = 2 U = 1
Housing Rehabilitation/SHIP	10	5	EL = 0 VL = 2 L = 3	C = 4 U = 1
Housing Rehabilitation/CDBG	0	0	EL = 0 VL = 0 L = 0	C = 0 U = 0
Total	14	9		

Public Services

There is a genuine need to have social and community services designated within west Volusia County. Through the use of CDBG funds, the City has entered into contractual agreements with public service providers in, or near the area, who have agreed to provide a level of service that will prove beneficial to the residents of our community. Among the services contracted are: home-buyer education classes, after-school programs, homelessness prevention, elderly services, pre-school scholarships, matching college scholarships, and programs for at-risk teens. Although funding is comprised of less than $70,000, it makes a big difference in the level of services, when funds are matched and leveraged with other resources.

Table 13	PY 2015/2016 Budgeted	PY 2015/2016 Expended	Service
Administration	$ 89,925	$54,761	Program Implementation
Lake Butler Playground	$125,000	$59,237	Replace outdated playground equipment
Campbell Park Playground	$ 11,423	$8,801	Replace outdated playground equipment-carry over from PY2014-2015
Dewey Boster Sports Complex	$240,000	$99,845	Fence replacement and parking lot clearing
Healthy Start	$ 9,295	$8,654	Family Place resource center
Council on Aging	$ 11,000	$11,000	Social Services/programs for elderly
Futures Foundation	$ 9,375	$9,375	Matching scholarships for students
Community Life Center	$ 8,385	$8 385	Homeless Prevention Services
Early Learning Coalition	$ 11,000	$11,000	Childcare services
New Hope Human Services	$ 7,260	$7,260	Mentoring program for teens
Neighborhood Center of West Volusia	$11,000	$11,000	Homeless Prevention Services
Housing Rehabilitation	$264,275	$ 225	Rehabilitation of single family homes
TOTAL	**$797,938**	**$289,543**	

Activities in this category are implemented through a competitive process in which non-profit entities submit a proposal designed to meet community needs as outlined in the Five-Year Consolidated Plan. The services were ranked in accordance with a Survey of Needs conducted by the City for residents to select which needs were priorities. The City then compiled the results and listed the prioritized needs in accordance with residents input.

Priority Housing Needs/Investment Plan Table

Table 14

Priority Need	5-Yr. Goal Plan/Act	Yr. 1 Goal Plan/Act	Yr. 2 Goal Plan/Act	Yr. 3 Goal Plan/Act	Yr. 4 Goal Plan/Act	Yr. 5 Goal Plan/Act
Renters	0					
0 - 30 of MFI						
31 - 50% of MFI						
51 - 80% of MFI						
Owners						
0 - 30 of MFI						
31 - 50 of MFI	8	2	2	1	2	1
51 - 80% of MFI	15	4	5	3	1	1
Homeless*						
Individuals						

Families						
Non-Homeless Special Needs						
Physical Disability						
Mental Disability						
Developmental Disability	9	3	2	1	3	1
HIV/AIDS						
Total	32	9	9	5	6	3
Total Section 215						
212 Renter						
215 Owner						

* Homeless individuals and families assisted with transitional and permanent housing

Annual Housing Completion Goals

Table 15

Grantee Name: **Program Year:**	**Expected Annual Number of Units To Be Completed**	**Actual Annual Number of Units Completed**	**Resources used during the period**			
			CDBG	**HOME**	**ESG**	**HOPWA**
ANNUAL AFFORDABLE HOUSING GOALS (SEC. 215)						
Homeless households			☐	☐	☐	☐
Non-homeless households			☐	☐	☐	☐
Special needs households			☐	☐	☐	☐
ANNUAL AFFORDABLE RENTAL HOUSING GOALS (SEC. 215)						
Acquisition of existing units			☐	☐		☐
Production of new units			☐	☐		☐
Rehabilitation of existing units			☐	☐	☐	☐
Rental Assistance			☐	☐		☐
Total Sec. 215 Affordable Rental			☐	☐	☐	☐
ANNUAL AFFORDABLE OWNER HOUSING GOALS (SEC. 215)						
Acquisition of existing units			☐	☐		
Production of new units			☐	☐		
Rehabilitation of existing units	14	0	☒	☐		
Homebuyer Assistance			☐	☐		☐
Total Sec. 215 Affordable Owner			☐	☐	☐	☐
ANNUAL AFFORDABLE HOUSING GOALS (SEC. 215)						
Acquisition of existing units			☐	☐		☐
Production of new units			☐	☐		☐

Rehabilitation of existing units			☐	☐	☐	☐
Homebuyer Assistance			☐	☐		☐
Total Sec. 215 Affordable Housing			☐	☐	☐	☐
ANNUAL HOUSING GOALS						
Annual Rental Housing Goal			☐	☐	☐	☐
Annual Owner Housing Goal	14	0	☒	☐	☐	☐
Total Annual Housing Goal	14	0	☒	☐	☐	☐

OUTCOME PERFORMANCE MEASUREMENTS
(Table 1C, 2C, 3A)

Table 16

Availability/Accessibility of Decent Housing (DH-1)							
Specific Objective		Source of Funds	Year	Performance Indicators	Expected Number	Actual Number	Percent Achieved
DH -2	To provide housing rehabilitation to single-family housing units that is owned by low to moderate income households.	CDBG	2013 2014 2015 2016 2017	The number of housing units rehabilitated.	10 26 14	3 1 0	33% 4% 0% % %
			MULTI-YEAR GOAL		50	4	8%
Affordability of Decent Housing (DH-2)							
Sustainability of Decent Housing (DH-3)							
DH-3	To provide housing counseling to persons needing assistance.	CDBG	2013 2014 2015 2016 2017	The number of households with access to new or improved services.	10 10 10	3 12 12	33% 120% 120% % %
			MULTI-YEAR GOAL		30	27	90%
Availability/Accessibility of Suitable Living Environment (SL-1)							
SL-1	To provide various services that promotes education and academic achievement. Boys/Girls Club.	CDBG	2013 2014 2015 2016 2017	The number of persons with access to new and improved services.	200 200 0	256 273 0	128% 136% 0% % %
			MULTI-YEAR GOAL		400	529	132%

SL-1	Provide screening and assessments for people seeking substance abuse treatment. Windward.	CDBG	2013 2014 2015 2016 2017	The number of persons with access to new and improved services.	110 60 0	54 52 0	49% 86% 0% % %
			MULTI-YEAR GOAL		170	106	62%
SL-1	To provide hunger and homelessness prevention services. Community Life Center.	CDBG	2013 2014 2015 2016 2017	The number of persons with access to new and improved services.	0 0 895	0 0 536	0% 0% 60%
			MULTI-YEAR GOAL		895	536	60%
Affordability of Suitable Living Environment (SL-3)							
SL-3	To provide activities for senior citizens including exercise, social and nutrition. COA.	CDBG	2013 2014 2015 2016 2017	The number of persons with access to new and improved services.	480 625 625	407 367 526	85% 59% 84% % %
			MULTI-YEAR GOAL		1,730	1,300	75%
Availability/Accessibility of Economic Opportunity (EO-1)							
Sustainability of Economic Opportunity (EO-3)							
EO-2	To provide eligible high school students educational opportunities to attend college through scholarships. Futures Foundation.	CDBG	2013 2014 2015 2016 2017	The number of persons with increased access to scholarships.	85 12 12	90 62 70	106% 516% 583% % %
			MULTI-YEAR GOAL		109	222	203%
EO-2	Promote cognitive and social skills for children. From birth to age five. ELC.	CDBG	2013 2014 2015 2016 2017	The number of persons with access to new and improved services.	63 63 67	178 72 369	282% 88% 550% % %
			MULTI-YEAR GOAL		193	619	320%
SL-1	To maintain the Family Place and provide access to community resources. Healthy Start.	CDBG	2013 2014 2015 2016 2017	The number of persons with access to new and improved services.	0 0 480	0 0 252	0% 0% 53% % %
			MULTI-YEAR GOAL		480	252	53%
SL-1	To provide hunger and homelessness prevention services. Neighborhood Center.	CDBG	2013 2014 2015 2016 2017	The number of persons with access to new and improved services.	0 120 120	0 378 260	0% 315% 216% % %

			MULTI-YEAR GOAL		120	260	216%
SL-1	To provide mentoring for high school/middle school girls addressing academic and social behaviors. New Hope.	CDBG	2013 2014 2015 2016 2017	The number of persons with access to new and improved services.	30 25 30	21 27 34	70% 108% 113% % %
			MULTI-YEAR GOAL		85	82	96%

Additional Outcome Performance Measurements

Table 17 Program Year 2015 (October 1, 2015 - September 30, 2016)

Code	Specific Objective	Funding	Performance Indicator (s)	PY 2015/16 Goal	PY 2015/16 Actual
SL-3	Improve quality of neighborhood facilities for low income persons with of Playground equipment at Lake Butler.	CDBG	The number of persons with access to new and improved services.	3515	3515
SL-1	Improve quality of neighborhood facilities for low income persons with Dewey Boster Park upgrades.	CDBG	The number of persons with access to new and improved services.	70,000	70,000

PUBLIC NOTICE

CITY OF DELTONA
CONSOLIDATED ANNUAL PERFORMANCE AND EVALUATION REPORT
FOR PROGRAM YEAR 2015-2016

Notice is hereby given that on or about December 19, 2016, the City of Deltona will submit to the U. S. Department of Housing and Urban Development the Consolidated Annual Performance and Evaluation Report (CAPER) for the Community Development Block Grant Program. This report summarizes the activities undertaken, the progress achieved, and the financial impact of having implemented the activities or programs during the period October 1, 2015 through September 30, 2016.

A copy of the CAPER will be available for review by the general public at the City of Deltona Municipal Complex, beginning November 28, 2016 until December 12, 2016, during regular business hours. Comments may be made by calling Ron Paradise at 386-878-8610, or by writing, Attn: Ron Paradise, The City of Deltona, Community Development Office, 2345 Providence Boulevard, Deltona, FL 32725.

Contract and Subcontract Activity

U.S. Department of Housing and Urban Development

OMB Approval No.: 2577-0088

OMB Approval No.: 2502-0355

Public reporting burden for this collection of information is estimated to average .5 hours per response, including the time for reviewing instructions, searching existing data sources, gathering and maintaining the data needed, and completing and reviewing the collection of information. The Information is voluntary. HUD may not collect this information, and you are not required to complete this form, unless it displays a currently valid OMB Control Number.

Executive Orders dated July 14, 1983, directs the Minority Business Development Plans shall be developed by each Federal Agency and the these annual plans shall establish minority business development objectives. The information is used by HUD to monitor and evaluate MBE activities against the total program activity and the designated minority business enterprise (MBE) goals. The Department requires the information to provide guidance and oversight for programs for the development of minority business enterprise concerning Minority Business Development. If the information is not collected HUD would not be able to establish meaningful MBE goals nor evaluate MBE performance against these goals.

Privacy Act Notice = The United States Department of Housing and Urban Development, Federal Housing Administration, is authorized to solicit the Information requested in this form by virtue of Title 12, United States Code, Section 1701 et seq., and regulation. It will not be disclosed or relesed outside the United States Department of Housing and Urban Development without your consetn, except as required or permitted by Law.

1. Grantee/Project Owner/Developer/Sponsor/Builder/Agency	Check if:		2. Location (City, State Zip Code)
City of Deltona	PH		2345 Providence Blvd
	IH		Deltona, FL 32725
	CPD	X	
	Housing		

3a. Name of Contact Person	3b. Phone Number (Including Area Code)	4. Reporting Period	5. Program Code (Not applicable for CPD programs.) See explanation of Codes at bottom of Page Use a separate sheet for each program code.	6. Date Submitted to Field Office
Mari Leisen, Financial Analyst	386-878-8603	April 1, 2016 - September 30, 2016		October 4, 2016

Grant/Project Number or HUD Case Number or other identification of property, subdivision, dwelling unit, etc. 7a.	Amount of Contract or Subcontact 7b.	Type of Trade Code (See below) 7c.	Contractor or Subcontractor Business Racial/Ethnic (See below) 7d.	Woman Owned Business (Yes or No) 7e.	Prime Contractor Identification (ID) Number 7f.	Sec. 3 7g.	Subcontractor Identification (ID) Number 7h	Sec. 3 7i.	Contractor/Subcontractor Name and Address 7j. Name	Street	City	State	Zip
B-15-MC-12-0049	$84,245	3	1	Yes		No			Hill's Fencing, Inc	915 E. Ohio Ave.	Lake Helen	FL	32744
B-15-MC-12-0049	$15,600	3	1	No		No			4 Jays Land Services, Inc.	74 Spring Vista Dr. #100	Debary	FL	32713
B-15-MC-12-0049	$118,474	3	1	No		No			Kompan, Inc.	930 Broadway	Tacoma	WA	98402

7c: Type of Trade Codes:

CPD:
1 = New Construction
2 = Education/Training
3 = Other

Housing/Public Housing:
1 = New Construction
2 = Substantial Rehab.
3 = Repair
4 = Service
5 = Project Mangt.
6 = Professional
7 = Tenant Services
8 = Education/Training
9 = Arch./Engrg. Appraisal
0 = Other

7d: Racial/Ethnic Codes:

1 = White Americans
2 = Black Americans
3 = Native Americans
4 = Hispanic Americans
5 = Asian/Pacific Americans
6 = Hasidic Jews

5: Program Codes (Complete for Housing and Public and Indian Housing programs only):

1 = All Insured, including Section8
2= Flexible Subsidy
3 = Section 8 Noninsured, Non-HFDA
4 = Insured (Management)
5 = Section 202
6 = HUD-Held (Management)
7 = Public/India Housing
8 = Section 811

Previous editions are obsolete.

form **HUD-2516** (8/98)

Contract and Subcontract Activity

U.S. Department of Housing and Urban Development

OMB Approval No.: 2577-0088

OMB Approval No.: 2502-0355

Public reporting burden for this collection of information is estimated to average .5 hours per response, including the time for reviewing instructions, searching existing data sources, gathering and maintaining the data needed, and completing and reviewing the collection of information. The Information is voluntary. HUD may not collect this information, and you are not required to complete this form, unless it displays a currently valid OMB Control Number.

Executive Orders dated July 14, 1983, directs the Minority Business Development Plans shall be developed by each Federal Agency and the these annual plans shall establish minority business development objectives. The information is used by HUD to monitor and evaluate MBE activities against the total program activity and the designated minority business enterprise (MBE) goals. The Department requires the information to provide guidance and oversight for programs for the development of minority business enterprise concerning Minority Business Development. If the information is not collected HUD would not be able to establish meaningful MBE goals nor evaluate MBE performance against these goals.

Privacy Act Notice = The United States Department of Housing and Urban Development, Federal Housing Administration, is authorized to solicit the Information requested in this form by virtue of Title 12, United States Code, Section 1701 et seq., and regulation. It will not be disclosed or relesed outside the United States Department of Housing and Urban Development without your consetn, except as required or permitted by Law.

1. Grantee/Project Owner/Developer/Sponsor/Builder/Agency	Check if:		2. Location (City, State Zip Code)
City of Deltona	PH		2345 Providence Blvd
	IH		Deltona, FL 32725
	CPD	X	
	Housing		

3a. Name of Contact Person	3b. Phone Number (Including Area Code)	4. Reporting Period	5. Program Code (Not applicable for CPD programs.) See explanation of Codes at bottom of Page Use a separate sheet for each program code.	6. Date Submitted to Field Office
Mari Leisen, Financial Analyst	386-878-8603	October 1, 2015 - March 31, 2016		April 25, 2016

Grant/Project Number or HUD Case Number or other identification of property, subdivision, dwelling unit, etc. 7a.	Amount of Contract or Subcontact 7b.	Type of Trade Code (See below) 7c.	Contractor or Subcontractor Business Racial/Ethnic (See below) 7d.	Woman Owned Business (Yes or No) 7e.	Prime Contractor Identification (ID) Number 7f.	Sec. 3 7g.	Subcontractor Identification (ID) Number 7h	Sec. 3 7i.	Contractor/Subcontractor Name and Address 7j. Name	Street	City	State	Zip
B-15-MC-12-0049	$11,000	3	2 & 4	No		No			Council on Aging	160 N. Beach St.	Daytona Beach	FL	32114
B-15-MC-12-0049	$11,000	3	2 & 4	Yes		No			The Early Learning Coalition	135 Executive Circle, Suite 100	Daytona Beach	FL	32114
B-15-MC-12-0049	$11,000	3	2 & 4	Yes		No			Neighborhood Center	434 S. Woodland Blvd.	Deland	FL	32725

7c: Type of Trade Codes:

CPD:
1 = New Construction
2 = Education/Training
3 = Other

Housing/Public Housing:
1 = New Construction
2 = Substantial Rehab.
3 = Repair
4 = Service
5 = Project Mangt.
6 = Professional
7 = Tenant Services
8 = Education/Training
9 = Arch./Engrg. Appraisal
0 = Other

7d: Racial/Ethnic Codes:

1 = White Americans
2 = Black Americans
3 = Native Americans
4 = Hispanic Americans
5 = Asian/Pacific Americans
6 = Hasidic Jews

5: Program Codes (Complete for Housing and Public and Indian Housing programs only):

1 = All Insured, including Section8
2= Flexible Subsidy
3 = Section 8 Noninsured, Non-HFDA
4 = Insured (Management)
5 = Section 202
6 = HUD-Held (Management)
7 = Public/India Housing
8 = Section 811

Previous editions are obsolete.

form **HUD-2516** (8/98)

Section 3 Summary Report

Economic Opportunities for Low- and Very Low-Income Persons

U.S. Department of Housing and Urban Development

Office of Fair Housing and Equal Opportunity

OMB Approval No. 2529-0043
(exp. 11/30/2018)

Disbursement Agency
CITY OF DELTONA
2345 PROVIDENCE BLVD. DEVELOPMENT SERVICES DIVISION, DELTONA, FL 32725
59-3348668

Reporting Entity
CITY OF DELTONA
2345 PROVIDENCE BLVD. DEVELOPMENT SERVICES DIVISION, DELTONA, FL 32725

Dollar Amount:	$188,034.29
Contact Person:	Mari Leisen
Date Report Submitted:	11/07/2016

Reporting Period		**Program Area Code**	**Program Area Name**
From	**To**		
10/01/2015	09/30/2016	CDB1	Community Devel Block Grants

The expenditure of these funds did not result in any covered contracts or new hires during the 12-month period selected.

IDIS

Program	Fund Type	Grantee Name	Grant Number	Authorized Amount	Suballocated Amount	Amount Committed to Activities	Net Drawn Amount	FY YTD Net Draw Amount	Available to Commit	Available to Draw	Recapture Amount
CDBG	EN	DELTONA	B03MC120049	$596,000.00	$0.00	$596,000.00	$596,000.00	$0.00	$0.00	$0.00	$0.00
			B04MC120049	$589,000.00	$0.00	$589,000.00	$589,000.00	$0.00	$0.00	$0.00	$0.00
			B05MC120049	$563,408.00	$0.00	$563,408.00	$563,408.00	$0.00	$0.00	$0.00	$0.00
			B06MC120049	$512,156.00	$0.00	$512,156.00	$512,156.00	$0.00	$0.00	$0.00	$0.00
			B07MC120049	$516,124.00	$0.00	$516,124.00	$516,124.00	$0.00	$0.00	$0.00	$0.00
			B08MC120049	$499,088.00	$0.00	$499,088.00	$499,088.00	$0.00	$0.00	$0.00	$0.00
			B09MC120049	$505,040.00	$0.00	$505,040.00	$505,040.00	$0.00	$0.00	$0.00	$0.00
			B10MC120049	$543,184.00	$0.00	$543,184.00	$543,184.00	$0.00	$0.00	$0.00	$0.00
			B11MC120049	$449,996.00	$0.00	$449,996.00	$449,996.00	$0.00	$0.00	$0.00	$0.00
			B12MC120049	$441,819.00	$0.00	$441,819.00	$441,819.00	$0.00	$0.00	$0.00	$0.00
			B13MC120049	$453,929.00	$0.00	$453,929.00	$453,929.00	$0.00	$0.00	$0.00	$0.00
			B14MC120049	$440,094.00	$0.00	$100,808.41	$100,808.41	$0.00	$339,285.59	$339,285.59	$0.00
			B15MC120049	$449,626.00	$0.00	$346,279.16	$280,516.37	$195,618.22	$103,346.84	$169,109.63	$0.00
			DELTONA Subtotal:	**$6,559,464.00**	**$0.00**	**$6,116,831.57**	**$6,051,068.78**	**$195,618.22**	**$442,632.43**	**$508,395.22**	**$0.00**
		EN Subtotal:		**$6,559,464.00**	**$0.00**	**$6,116,831.57**	**$6,051,068.78**	**$195,618.22**	**$442,632.43**	**$508,395.22**	**$0.00**
GRANTEE				**$6,559,464.00**	**$0.00**	**$6,116,831.57**	**$6,051,068.78**	**$195,618.22**	**$442,632.43**	**$508,395.22**	**$0.00**

REPORT FOR CPD PROGRAM CDBG
PGM YR ALL

Plan Year	IDIS Project	Project	IDIS Activity ID	Activity Name	Activity Status	Program	Funded Amount	Draw Amount	Balance
2003	1	STORMWATER DRAINAGE PROJECTS	5	CLEAR LAKE PUMP STATION	Completed	CDBG	$68,360.15	$68,360.15	$0.00
			6	HARRIS B. SAXON PARK RETENTION POND	Completed	CDBG	$25,261.62	$25,261.62	$0.00
			7	FAIRGREEN AND ESSEX DRAINAGE	Completed	CDBG	$29,457.75	$29,457.75	$0.00
			8	HASTING DRIVE DRAINAGE	Completed	CDBG	$20,127.26	$20,127.26	$0.00
			9	CLEARFIELD DRAINAGE	Completed	CDBG	$50,730.87	$50,730.87	$0.00
			10	WATERFALL CIRCLE DRAINAGE	Completed	CDBG	$59,323.39	$59,323.39	$0.00
			11	BEAL RETENTION POND	Completed	CDBG	$39,251.70	$39,251.70	$0.00
			12	EVERGREEN	Completed	CDBG	$29,514.86	$29,514.86	$0.00
		Project Total					**$322,027.60**	**$322,027.60**	**$0.00**
	2	FIREFIGHTER'S MEMORIAL PARK	13	FIREFIGHTER'S MEMORIAL PARK	Canceled	CDBG	$0.00	$0.00	$0.00
		Project Total					**$0.00**	**$0.00**	**$0.00**
	3	HOUSING REHABILITATION	15	2740 JULIET DRIVE	Canceled	CDBG	$0.00	$0.00	$0.00
			16	JOANN LOFFLER	Completed	CDBG	$3,805.00	$3,805.00	$0.00
			17	ELENA TAYLOR	Completed	CDBG	$2,986.00	$2,986.00	$0.00
			18	MICHELLE BROWN	Canceled	CDBG	$0.00	$0.00	$0.00
			19	1629 HASTINGS DRIVE	Canceled	CDBG	$0.00	$0.00	$0.00
			20	DEBORAH YORK	Completed	CDBG	$2,340.00	$2,340.00	$0.00
			21	DEBORAH HUTCHINSON	Canceled	CDBG	$0.00	$0.00	$0.00
			22	BONNIE MORTON	Completed	CDBG	$1,580.00	$1,580.00	$0.00
			23	CARLOS RAMIRO	Completed	CDBG	$997.00	$997.00	$0.00
			24	ADA DENNIS	Completed	CDBG	$4,956.28	$4,956.28	$0.00
			32	HOUSING REHABILITATION	Canceled	CDBG	$0.00	$0.00	$0.00
		Project Total					**$16,664.28**	**$16,664.28**	**$0.00**
	4	CDBG ADMINISTRATION	14	CDBG ADMINISTRATION	Completed	CDBG	$25,000.00	$25,000.00	$0.00
		Project Total					**$25,000.00**	**$25,000.00**	**$0.00**
	Program Total					**CDBG**	**$363,691.88**	**$363,691.88**	**$0.00**
	2003 Total						**$363,691.88**	**$363,691.88**	**$0.00**
2004	1	STORMWATER DRAINAGE	25	HENDERSON STREET STORMWATER PROJECT	Completed	CDBG	$28,001.20	$28,001.20	$0.00
			26	NORTH PAGE DRIVE STORMWATER PROJECT	Completed	CDBG	$42,356.68	$42,356.68	$0.00
			27	CAMPBELL / BRAIRWOOD STORMWATER PROJECT	Completed	CDBG	$58,405.99	$58,405.99	$0.00
			28	FAIRGREEN DRIVE	Completed	CDBG	$46,094.10	$46,094.10	$0.00
		Project Total					**$174,857.97**	**$174,857.97**	**$0.00**
	2	PARK FACILITY IMPROVEMENTS	29	HARRIS M. SAXON PARK TENNIS COURTS	Completed	CDBG	$63,107.00	$63,107.00	$0.00
		Project Total					**$63,107.00**	**$63,107.00**	**$0.00**

Plan Year	IDIS Project	Project	IDIS Activity ID	Activity Name	Activity Status	Program	Funded Amount	Draw Amount	Balance
2004	3	HOUSING REHABILITATION	30	HOUSING REHABILITATION	Canceled	CDBG	$0.00	$0.00	$0.00
			38	CASSANDRA ARNOLD	Completed	CDBG	$4,706.08	$4,706.08	$0.00
		Project Total					**$4,706.08**	**$4,706.08**	**$0.00**
	4	GENERAL ADMINISTRATION	31	CDBG GENERAL ADMINISTRATION	Completed	CDBG	$26,500.00	$26,500.00	$0.00
		Project Total					**$26,500.00**	**$26,500.00**	**$0.00**
	Program Total					**CDBG**	**$269,171.05**	**$269,171.05**	**$0.00**
	2004 Total						**$269,171.05**	**$269,171.05**	**$0.00**
2005	3	CDBG ADMINISTRATION	33	CDBG ADMINASTRATION	Completed	CDBG	$26,500.00	$26,500.00	$0.00
		Project Total					**$26,500.00**	**$26,500.00**	**$0.00**
	6	STORWATER DRAINAGE	34	FIREFIGHTER PARK	Completed	CDBG	$227,455.98	$227,455.98	$0.00
			35	AUSTIN/KIMBERLY	Completed	CDBG	$61,693.79	$61,693.79	$0.00
			36	SABLE LAKE HELEN OSTEEN	Completed	CDBG	$25,327.03	$25,327.03	$0.00
			37	PAGE DRIVE TO BRIARWOOD LAKE	Completed	CDBG	$25,631.77	$25,631.77	$0.00
		Project Total					**$340,108.57**	**$340,108.57**	**$0.00**
	7	PARK IMPROVEMENTS	49	HARRIS SAXON COMMUNITY CENTER	Completed	CDBG	$55,118.09	$55,118.09	$0.00
		Project Total					**$55,118.09**	**$55,118.09**	**$0.00**
	Program Total					**CDBG**	**$421,726.66**	**$421,726.66**	**$0.00**
	2005 Total						**$421,726.66**	**$421,726.66**	**$0.00**
2006	1	ST0RMWATER DRAINAGE IMPROVEMENTS	39	FIREFIGHTERS PARK PHASE II	Completed	CDBG	$225,549.17	$225,549.17	$0.00
			40	DANA DRIVE	Completed	CDBG	$122,473.29	$122,473.29	$0.00
			41	TRINIDAD AVENUE	Completed	CDBG	$20,095.29	$20,095.29	$0.00
			42	FIREFIGHTER PHASE III	Completed	CDBG	$84,397.52	$84,397.52	$0.00
			43	LAKE HELEN OSTEEN ROAD	Completed	CDBG	$166,533.14	$166,533.14	$0.00
			44	DWIGHT HAWKINS PARK	Canceled	CDBG	$0.00	$0.00	$0.00
		Project Total					**$619,048.41**	**$619,048.41**	**$0.00**
	4	PARK IMPROVEMENTS	45	DWIGHT HAWKINS PARK	Completed	CDBG	$69,903.37	$69,903.37	$0.00
			46	LAKE GLEASON PARK	Completed	CDBG	$4,523.19	$4,523.19	$0.00
			47	FIREFIGHTER MEMORIAL PARK	Completed	CDBG	$4,523.19	$4,523.19	$0.00
			50	HARRIS SAXON PARK	Completed	CDBG	$20,354.53	$20,354.53	$0.00
		Project Total					**$99,304.28**	**$99,304.28**	**$0.00**
	5	TARGET AREA ROAD RESURFACING	48	ROAD RESURFACING	Completed	CDBG	$276,234.94	$276,234.94	$0.00
		Project Total					**$276,234.94**	**$276,234.94**	**$0.00**
	6	PUBLIC SERVICES	51	WEATHER RADIOS	Completed	CDBG	$4,375.00	$4,375.00	$0.00
			52	COUNCIL ON AGING	Completed	CDBG	$16,000.00	$16,000.00	$0.00
		Project Total					**$20,375.00**	**$20,375.00**	**$0.00**
	7	ADMINISTRATION	55	2006 ADMINISTRATION	Completed	CDBG	$23,548.23	$23,548.23	$0.00
		Project Total					**$23,548.23**	**$23,548.23**	**$0.00**
	Program Total					**CDBG**	**$1,038,510.86**	**$1,038,510.86**	**$0.00**

Plan Year	IDIS Project	Project	IDIS Activity ID	Activity Name	Activity Status	Program	Funded Amount	Draw Amount	Balance
2006	**2006 Total**						**$1,038,510.86**	**$1,038,510.86**	**$0.00**
2007	1	ADMINISTRATION	54	ADMIN	Completed	CDBG	$27,375.28	$27,375.28	$0.00
		Project Total					**$27,375.28**	**$27,375.28**	**$0.00**
	2	PUBLIC SERVICES	53	CONSUMER CREDIT COUNSELING SERVICES	Completed	CDBG	$1,885.00	$1,885.00	$0.00
			83	COMMUNITY LIFE CENTER	Completed	CDBG	$6,287.52	$6,287.52	$0.00
			84	ASSOCIATION FOR RETARDED CITIZENS (ARC)	Completed	CDBG	$20,754.66	$20,754.66	$0.00
			85	UNITED CEREBRAL PALSY OF CENTRAL FLORIDA	Completed	CDBG	$17,500.00	$17,500.00	$0.00
		Project Total					**$46,427.18**	**$46,427.18**	**$0.00**
	3	STORMWATER	76	FARLEY COURT DRAINAGE IMPROVEMENTS	Completed	CDBG	$157,117.75	$157,117.75	$0.00
			77	WING TERRACE DRAINAGE IMPROVEMENTS	Completed	CDBG	$46,657.47	$46,657.47	$0.00
			78	WHITEWOOD/W.WELLINGTON DRAINAGE IMPRVMNT	Completed	CDBG	$32,879.15	$32,879.15	$0.00
			79	NORTH GAUCHO CIRCLE DRAINAGE IMPROVEMENT	Completed	CDBG	$14,136.74	$14,136.74	$0.00
			80	WHITEWOOD DRIVE DRAINAGE IMPROVEMENTS	Completed	CDBG	$24,318.85	$24,318.85	$0.00
		Project Total					**$275,109.96**	**$275,109.96**	**$0.00**
	7	HOUSING REHABILIATION	56	ZUNILDA SMITH	Completed	CDBG	$4,450.00	$4,450.00	$0.00
			57	VIRGIL ACRE	Completed	CDBG	$4,518.72	$4,518.72	$0.00
			58	MICHAEL BRODY	Completed	CDBG	$2,910.00	$2,910.00	$0.00
			59	MICHELLE BROWN	Completed	CDBG	$4,860.00	$4,860.00	$0.00
			60	JOANN GIBSON	Completed	CDBG	$1,988.93	$1,988.93	$0.00
			61	MANUEL GUERRA	Completed	CDBG	$1,289.00	$1,289.00	$0.00
			62	DEBORAH HUTCHINSON	Completed	CDBG	$5,000.00	$5,000.00	$0.00
			63	CARLENE MORGAN	Completed	CDBG	$4,768.80	$4,768.80	$0.00
			64	ALBERTO NARVAEZ	Completed	CDBG	$5,000.00	$5,000.00	$0.00
			65	THEDA MITCHELL	Completed	CDBG	$5,000.00	$5,000.00	$0.00
			66	ASHA YOUNG	Completed	CDBG	$600.00	$600.00	$0.00
			67	DENISE PRECOPIO	Completed	CDBG	$5,000.00	$5,000.00	$0.00
			68	CHARLOTTE HILLGOTH	Completed	CDBG	$5,000.00	$5,000.00	$0.00
			69	RANDY TAYLOR-IRWIN	Completed	CDBG	$1,898.00	$1,898.00	$0.00
			70	BIENVENIDO SANTIAGO	Completed	CDBG	$4,674.12	$4,674.12	$0.00
			71	ISRAEL RAMOS	Completed	CDBG	$3,076.34	$3,076.34	$0.00
			72	KENNETH DANIELS	Completed	CDBG	$249.00	$249.00	$0.00
			73	JOESPH MALUCCI	Completed	CDBG	$4,037.12	$4,037.12	$0.00
			74	ADRIAN MARTINEZ	Completed	CDBG	$1,250.00	$1,250.00	$0.00
			75	ROBBIE RODRIGUEZ	Completed	CDBG	$359.86	$359.86	$0.00
			81	SANDRA VALASQUEZ	Completed	CDBG	$5,000.00	$5,000.00	$0.00
			82	RICHARD AND DEBORAH CARRIGAN	Completed	CDBG	$4,900.00	$4,900.00	$0.00
			86	YVONNE HOOVER	Completed	CDBG	$5,000.00	$5,000.00	$0.00

Plan Year	IDIS Project	Project	IDIS Activity ID	Activity Name	Activity Status	Program	Funded Amount	Draw Amount	Balance
2007	7	HOUSING REHABILIATION	87	MAURICE CUSSATT	Completed	CDBG	$478.00	$478.00	$0.00
			88	NESTER RAMOS	Completed	CDBG	$4,663.63	$4,663.63	$0.00
		Project Total					**$85,971.52**	**$85,971.52**	**$0.00**
	Program Total					**CDBG**	**$434,883.94**	**$434,883.94**	**$0.00**
	2007 Total						**$434,883.94**	**$434,883.94**	**$0.00**
2008	1	WATER AND SEWER IMPROVEMENTS	89	DOYLE/BETHEL POND IMPROVEMENT	Completed	CDBG	$178,634.93	$178,634.93	$0.00
		Project Total					**$178,634.93**	**$178,634.93**	**$0.00**
	2	PUBLIC SERVICES	90	COUNSEL ON AGING	Completed	CDBG	$16,000.00	$16,000.00	$0.00
			91	OUR CHILDREN FIRST	Canceled	CDBG	$0.00	$0.00	$0.00
			92	UNITED CEREBRAL PALSY OF EAST CENTRAL FL	Completed	CDBG	$10,000.00	$10,000.00	$0.00
			93	ASSOCIATION FOR RETARDED CITIZENS (ARC)	Completed	CDBG	$27,500.00	$27,500.00	$0.00
			94	COMMUNITY OUTREACH SERVICES	Completed	CDBG	$2,925.00	$2,925.00	$0.00
			98	GENERAL ADMINISTRATION	Completed	CDBG	$33,984.44	$33,984.44	$0.00
		Project Total					**$90,409.44**	**$90,409.44**	**$0.00**
	3	PUBLIC FACILITIES & OPEN SPACE IMPROVEMENTS	95	WES CRILE PARK/COMMUNITY CENTER	Canceled	CDBG	$0.00	$0.00	$0.00
		Project Total					**$0.00**	**$0.00**	**$0.00**
	4	LANDSCAPING/TREE PLANTING	96	LANDSCAPING TREE PLANTING	Canceled	CDBG	$0.00	$0.00	$0.00
		Project Total					**$0.00**	**$0.00**	**$0.00**
	5	ECONOMIC DEVELOPMENT	97	ECONOMIC DEVELOPMENT	Canceled	CDBG	$0.00	$0.00	$0.00
		Project Total					**$0.00**	**$0.00**	**$0.00**
	6	GENERAL PROGRAM ADMINISTRATION	100	CDBG ADMINISTRATION	Completed	CDBG	$4,399.36	$4,399.36	$0.00
		Project Total					**$4,399.36**	**$4,399.36**	**$0.00**
	7	HOUSING REHABILITATION	99	WILLIAM ZINS	Completed	CDBG	$4,225.24	$4,225.24	$0.00
			101	GONZALEZ, YODANNI	Completed	CDBG	$5,000.00	$5,000.00	$0.00
			102	RODRIGUEZ, LUIS & MARITZA	Completed	CDBG	$5,000.00	$5,000.00	$0.00
		Project Total					**$14,225.24**	**$14,225.24**	**$0.00**
	8	CLEARANCE AND DEMOLITION	103	HASTINGS HOUSE	Completed	CDBG	$4,030.00	$4,030.00	$0.00
			104	FALCON HOUSE	Completed	CDBG	$4,805.00	$4,805.00	$0.00
		Project Total					**$8,835.00**	**$8,835.00**	**$0.00**
	Program Total					**CDBG**	**$296,503.97**	**$296,503.97**	**$0.00**
	2008 Total						**$296,503.97**	**$296,503.97**	**$0.00**
2009	1	Stormwater/Drainage Improvements	110	Piedmont Pump Station	Completed	CDBG	$50,000.00	$50,000.00	$0.00
			111	Waycross Circle Pump Station	Completed	CDBG	$40,000.00	$40,000.00	$0.00
			112	Lake Lapanocia	Completed	CDBG	$49,870.00	$49,870.00	$0.00
			113	Lake Norwood	Completed	CDBG	$46,020.80	$46,020.80	$0.00
		Project Total					**$185,890.80**	**$185,890.80**	**$0.00**
	2	Administration	109	Personnel/Salaries	Completed	CDBG	$4,967.19	$4,967.19	$0.00

Plan Year	IDIS Project	Project	IDIS Activity ID	Activity Name	Activity Status	Program	Funded Amount	Draw Amount	Balance
2009	2	**Project Total**					**$4,967.19**	**$4,967.19**	**$0.00**
	5	Park Improvements	114	Wes Crile Renovations	Completed	CDBG	$134,499.89	$134,499.89	$0.00
			115	Harris Saxon Improvements	Completed	CDBG	$58,863.18	$58,863.18	$0.00
			117	Thornby Park	Completed	CDBG	$200,000.00	$200,000.00	$0.00
		Project Total					**$393,363.07**	**$393,363.07**	**$0.00**
	6	Housing Rehabilitation	116	Minor Repair	Completed	CDBG	$25,774.04	$25,774.04	$0.00
			127	Robinson-530 S. Floyd Circle	Completed	CDBG	$4,467.00	$4,467.00	$0.00
		Project Total					**$30,241.04**	**$30,241.04**	**$0.00**
	7	Public Services	118	The House Next Door	Canceled	CDBG	$0.00	$0.00	$0.00
			119	United Cerebral Palsy	Completed	CDBG	$5,000.00	$5,000.00	$0.00
			120	Community Legal Services	Completed	CDBG	$5,000.00	$5,000.00	$0.00
			121	Boys and Girls Club	Completed	CDBG	$10,000.00	$10,000.00	$0.00
			122	Futures Foundation for Volusia County Schools	Completed	CDBG	$15,000.00	$15,000.00	$0.00
			123	B & C Empowerment	Completed	CDBG	$15,000.00	$15,000.00	$0.00
			124	Community Outreach Services	Completed	CDBG	$5,000.00	$5,000.00	$0.00
			125	Earlly Learning Coalition of Volusia/Flagler	Completed	CDBG	$8,261.74	$8,261.74	$0.00
			126	The Association of Retarded Citizens	Canceled	CDBG	$0.00	$0.00	$0.00
		Project Total					**$63,261.74**	**$63,261.74**	**$0.00**
	Program Total					**CDBG**	**$677,723.84**	**$677,723.84**	**$0.00**
	2009 Total						**$677,723.84**	**$677,723.84**	**$0.00**
2010	2	Administration	128	Personnel/administrative costs	Completed	CDBG	$55,353.71	$55,353.71	$0.00
		Project Total					**$55,353.71**	**$55,353.71**	**$0.00**
	3	Stormwater Improvements	129	Lombardy Phase 3	Completed	CDBG	$31,942.54	$31,942.54	$0.00
			130	Hager St./Cobblestone Ave. Stormwater	Completed	CDBG	$38,407.96	$38,407.96	$0.00
			131	Stillwater Ave./Robert Blvd.	Completed	CDBG	$112,887.67	$112,887.67	$0.00
			132	Stillwater Ave/Radcliff Street Stormwater Imp	Completed	CDBG	$4,077.20	$4,077.20	$0.00
			133	Lake Norwood Pump Station	Completed	CDBG	$132,248.00	$132,248.00	$0.00
		Project Total					**$319,563.37**	**$319,563.37**	**$0.00**
	4	Public Services	134	B & C Empowerment, Inc	Completed	CDBG	$1,148.00	$1,148.00	$0.00
			135	Boys and Girls Club	Completed	CDBG	$10,946.45	$10,946.45	$0.00
			136	Community Legal Services	Completed	CDBG	$5,000.00	$5,000.00	$0.00
			137	Early Learning Coalition	Completed	CDBG	$9,932.99	$9,932.99	$0.00
			138	New Hope Human Services	Completed	CDBG	$8,000.00	$8,000.00	$0.00
			139	United Cerebral Palsy	Completed	CDBG	$7,500.00	$7,500.00	$0.00
			140	Self Empowerment Services	Completed	CDBG	$8,000.00	$8,000.00	$0.00
			141	Take Stock in Children/Futures Foundation	Completed	CDBG	$15,000.00	$15,000.00	$0.00
		Project Total					**$65,527.44**	**$65,527.44**	**$0.00**
	5	Minor Repairs	142	Cheryl Johnson	Canceled	CDBG	$0.00	$0.00	$0.00

Plan Year	IDIS Project	Project	IDIS Activity ID	Activity Name	Activity Status	Program	Funded Amount	Draw Amount	Balance
2010	5	Minor Repairs	143	Beth Ojalvo/John Burggraf	Completed	CDBG	$7,490.00	$7,490.00	$0.00
			144	Catherine Benson	Canceled	CDBG	$0.00	$0.00	$0.00
		Project Total					**$7,490.00**	**$7,490.00**	**$0.00**
	6	Housing Rehabilitation	145	Theresa Benke	Completed	CDBG	$159.61	$159.61	$0.00
			146	Agnes Sulek	Completed	CDBG	$520.00	$520.00	$0.00
		Project Total					**$679.61**	**$679.61**	**$0.00**
	7	Economic Development	147	ARC of Volusia	Completed	CDBG	$13,967.25	$13,967.25	$0.00
		Project Total					**$13,967.25**	**$13,967.25**	**$0.00**
	Program Total					**CDBG**	**$462,581.38**	**$462,581.38**	**$0.00**
	2010 Total						**$462,581.38**	**$462,581.38**	**$0.00**
2011	1	Administration	148	General and administrative costs	Completed	CDBG	$73,116.42	$73,116.42	$0.00
		Project Total					**$73,116.42**	**$73,116.42**	**$0.00**
	2	Public Services	149	Community Legal Services of Mid-FL	Completed	CDBG	$1,166.67	$1,166.67	$0.00
			150	Boys and Girls Club	Completed	CDBG	$9,331.00	$9,331.00	$0.00
			151	Council on Aging	Completed	CDBG	$9,331.00	$9,331.00	$0.00
			152	Haven Recovery	Completed	CDBG	$9,331.00	$9,331.00	$0.00
			153	Futures/Take Stock in Children	Completed	CDBG	$9,331.00	$9,331.00	$0.00
			154	United Cerebral Palsy/UCP of East Central FL	Completed	CDBG	$9,331.00	$9,331.00	$0.00
		Project Total					**$47,821.67**	**$47,821.67**	**$0.00**
	3	Stormwater improvements	155	Piedmont Drainage	Completed	CDBG	$5,000.00	$5,000.00	$0.00
			156	2041-2048 Keyes Lane	Completed	CDBG	$201,266.50	$201,266.50	$0.00
			157	Beal St. and Juliet Dr Drainage Retention	Completed	CDBG	$13,636.00	$13,636.00	$0.00
			158	3176 Mapleshade St	Completed	CDBG	$196,463.85	$196,463.85	$0.00
			159	1060 and 1066 Abadan Drive	Completed	CDBG	$35,420.00	$35,420.00	$0.00
			160	839 Maybrook Dr	Completed	CDBG	$7,107.30	$7,107.30	$0.00
			161	1053 Abadan Drive	Completed	CDBG	$30,000.00	$30,000.00	$0.00
			162	Westline and 5th Ave Drainage	Completed	CDBG	$4,821.13	$4,821.13	$0.00
			163	520 Lacy Circle	Completed	CDBG	$5,209.74	$5,209.74	$0.00
			164	1202 and 1210 E Fowler Dr	Completed	CDBG	$4,355.70	$4,355.70	$0.00
		Project Total					**$503,280.22**	**$503,280.22**	**$0.00**
	4	Park Improvements	165	Harris Saxon Playground Improvements	Completed	CDBG	$28,321.53	$28,321.53	$0.00
		Project Total					**$28,321.53**	**$28,321.53**	**$0.00**
	5	Economic Development	166	Facade Improvements	Canceled	CDBG	$0.00	$0.00	$0.00
		Project Total					**$0.00**	**$0.00**	**$0.00**
	6	Demolition	168	unidentified project	Canceled	CDBG	$0.00	$0.00	$0.00
		Project Total					**$0.00**	**$0.00**	**$0.00**
	8	Housing Rehabilitation	167	Doug Shippee	Completed	CDBG	$13,787.00	$13,787.00	$0.00
			169	Aletha McGee home repairs	Completed	CDBG	$25,266.00	$25,266.00	$0.00

Plan Year	IDIS Project	Project	IDIS Activity ID	Activity Name	Activity Status	Program	Funded Amount	Draw Amount	Balance
2011	8	Housing Rehabilitation	170	David Hughes home repairs	Completed	CDBG	$9,995.00	$9,995.00	$0.00
			171	Lois Horton home repairs	Completed	CDBG	$9,704.00	$9,704.00	$0.00
			172	Elva Adderley home repairs	Completed	CDBG	$17,495.00	$17,495.00	$0.00
			173	Santana Servilio	Completed	CDBG	$25,126.78	$25,126.78	$0.00
			174	Alba Vazquez	Completed	CDBG	$10,535.00	$10,535.00	$0.00
		Project Total					**$111,908.78**	**$111,908.78**	**$0.00**
	Program Total					**CDBG**	**$764,448.62**	**$764,448.62**	**$0.00**
	2011 Total						**$764,448.62**	**$764,448.62**	**$0.00**
2012	1	Stormwater	175	Stillwater Ave./Radcliff St./Horizon St.	Completed	CDBG	$13,301.50	$13,301.50	$0.00
			176	Danforth Ave	Completed	CDBG	$147,265.96	$147,265.96	$0.00
			177	1120/1128 Elgrove Drive	Completed	CDBG	$9,400.73	$9,400.73	$0.00
			178	Keys Lane/East Canal Road	Canceled	CDBG	$0.00	$0.00	$0.00
			191	Piedmont Drive - Phase II	Canceled	CDBG	$0.00	$0.00	$0.00
			192	Tulsa Dr/Dorchester Drive	Completed	CDBG	$11,912.00	$11,912.00	$0.00
		Project Total					**$181,880.19**	**$181,880.19**	**$0.00**
	2	Public Service	180	Haven Recovery	Completed	CDBG	$9,260.00	$9,260.00	$0.00
			181	Volusia/Flagler County Boys & Girls Club	Completed	CDBG	$9,230.00	$9,230.00	$0.00
			182	Early Learning Coalition	Completed	CDBG	$8,830.00	$8,830.00	$0.00
			183	United Cerebral Palsy	Completed	CDBG	$8,900.00	$8,900.00	$0.00
			184	Futures/Take Stock in Children	Completed	CDBG	$8,760.00	$8,760.00	$0.00
			185	Council on Aging	Completed	CDBG	$7,560.00	$7,560.00	$0.00
			186	Community Legal Services of Mid-FL	Completed	CDBG	$408.34	$408.34	$0.00
			187	B & C Empowerment Services, Inc.	Completed	CDBG	$5,950.00	$5,950.00	$0.00
			188	New Hope Human Services	Completed	CDBG	$4,033.00	$4,033.00	$0.00
		Project Total					**$62,931.34**	**$62,931.34**	**$0.00**
	3	Administration	179	Administration	Completed	CDBG	$87,367.04	$87,367.04	$0.00
		Project Total					**$87,367.04**	**$87,367.04**	**$0.00**
	4	Housing Rehabilitation	193	James Demaio	Completed	CDBG	$25,083.70	$25,083.70	$0.00
			194	Carol Sellery	Completed	CDBG	$19,318.50	$19,318.50	$0.00
			195	Francisco and Gloria Lopez	Completed	CDBG	$9,188.00	$9,188.00	$0.00
		Project Total					**$53,590.20**	**$53,590.20**	**$0.00**
	5	Parks and Recreation	189	Firefighter's Park	Completed	CDBG	$25,000.00	$25,000.00	$0.00
			190	Dwight Hawkins Park	Completed	CDBG	$30,000.00	$30,000.00	$0.00
		Project Total					**$55,000.00**	**$55,000.00**	**$0.00**
	Program Total					**CDBG**	**$440,768.77**	**$440,768.77**	**$0.00**
	2012 Total						**$440,768.77**	**$440,768.77**	**$0.00**
2013	1	Public Services	197	Haven Recovery	Completed	CDBG	$10,000.00	$10,000.00	$0.00
			198	Boys and Girls Clubs of Volusia/Flagler Counties	Completed	CDBG	$10,000.00	$10,000.00	$0.00

Plan Year	IDIS Project	Project	IDIS Activity ID	Activity Name	Activity Status	Program	Funded Amount	Draw Amount	Balance
2013	1	Public Services	199	Early Learning Coalition	Completed	CDBG	$9,998.75	$9,998.75	$0.00
			200	Futures Foundation/Take Stock in Children	Completed	CDBG	$16,000.00	$16,000.00	$0.00
			201	Council on Aging	Completed	CDBG	$10,000.00	$10,000.00	$0.00
			202	Dream Mentoring Project	Completed	CDBG	$10,000.00	$10,000.00	$0.00
		Project Total					**$65,998.75**	**$65,998.75**	**$0.00**
	2	Public Facilities	203	Dwight Hawkins Playground Equipment	Completed	CDBG	$59,362.46	$59,362.46	$0.00
			204	Lake Butler Basketball Court Resurfacing	Completed	CDBG	$35,000.00	$35,000.00	$0.00
			205	Dwight Hawkins Perimeter Fence	Completed	CDBG	$17,234.40	$17,234.40	$0.00
			206	Harris Saxon Basketball Court resurfacing	Completed	CDBG	$32,000.00	$32,000.00	$0.00
			207	Timber Ridge Park Basketball Court repairs	Canceled	CDBG	$0.00	$0.00	$0.00
		Project Total					**$143,596.86**	**$143,596.86**	**$0.00**
	3	Housing Activities	208	1347 Hayward Ave	Completed	CDBG	$24,864.25	$24,864.25	$0.00
		Project Total					**$24,864.25**	**$24,864.25**	**$0.00**
	4	Administration	196	Administration	Completed	CDBG	$67,182.87	$67,182.87	$0.00
		Project Total					**$67,182.87**	**$67,182.87**	**$0.00**
	Program Total					**CDBG**	**$301,642.73**	**$301,642.73**	**$0.00**
	2013 Total						**$301,642.73**	**$301,642.73**	**$0.00**
2014	1	Public Facilities	209	Campbell Park Swing Replacement and Relocation	Completed	CDBG	$5,714.11	$5,714.11	$0.00
			217	Lake Gleason Park Playground Equipment	Completed	CDBG	$36,764.55	$36,764.55	$0.00
			218	Campbell Park Shuffleboard Demolition	Completed	CDBG	$22,828.73	$22,828.73	$0.00
			219	Campbell Park - Installation of Pavilion	Completed	CDBG	$35,291.75	$35,291.75	$0.00
			225	Campbell Park Basketball Court Resurfacing	Completed	CDBG	$39,878.75	$39,878.75	$0.00
		Project Total					**$140,477.89**	**$140,477.89**	**$0.00**
	2	Public Services	210	Boys and Girls Club	Completed	CDBG	$8,332.50	$8,332.50	$0.00
			211	Neighborhood Center of West Volusia, Inc.	Completed	CDBG	$11,000.00	$11,000.00	$0.00
			212	Council on Aging	Completed	CDBG	$8,167.50	$8,167.50	$0.00
			213	Futures Foundation/Take Stock in Children	Completed	CDBG	$8,937.50	$8,937.50	$0.00
			214	Windward Behavioral Care, Inc.	Completed	CDBG	$3,872.50	$3,872.50	$0.00
			215	Early Learning Coaltion	Completed	CDBG	$10,810.96	$10,810.96	$0.00
			216	New Hope Human Services/Dream Mentoring	Completed	CDBG	$6,930.00	$6,930.00	$0.00
		Project Total					**$58,050.96**	**$58,050.96**	**$0.00**
	3	Housing Activites	221	702 Red Coach Avenue	Completed	CDBG	$60.00	$60.00	$0.00
			222	952 Vercelli	Open	CDBG	$285.00	$285.00	$0.00
			223	1011 Marble Terrace	Completed	CDBG	$26,197.50	$26,197.50	$0.00
			224	609 Nardello	Open	CDBG	$60.00	$60.00	$0.00
		Project Total					**$26,602.50**	**$26,602.50**	**$0.00**
	4	Adminstration	220	Administration	Completed	CDBG	$73,767.36	$73,767.36	$0.00
		Project Total					**$73,767.36**	**$73,767.36**	**$0.00**

Plan Year	IDIS Project	Project	IDIS Activity ID	Activity Name	Activity Status	Program	Funded Amount	Draw Amount	Balance
2014	**Program Total**					**CDBG**	**$298,898.71**	**$298,898.71**	**$0.00**
	2014 Total						**$298,898.71**	**$298,898.71**	**$0.00**
2015	3	Pubic Service	227	Early Learning Coalition	Completed	CDBG	$11,000.00	$11,000.00	$0.00
			228	05/06Futures/Take Stock in Children	Completed	CDBG	$9,375.00	$9,375.00	$0.00
			229	Council on Aging - Senior Center	Completed	CDBG	$11,000.00	$11,000.00	$0.00
			230	Neighborhood Center of West Volusia, Inc.	Completed	CDBG	$11,000.00	$11,000.00	$0.00
			231	New Hope Human Services - Dream Mentoring	Completed	CDBG	$7,260.00	$7,260.00	$0.00
			232	Healthy Start Family Place in Deltona	Completed	CDBG	$8,653.74	$8,653.74	$0.00
			233	Community Life Center - Hunger/Homeless Prevention	Completed	CDBG	$8,385.00	$8,385.00	$0.00
		Project Total					**$66,673.74**	**$66,673.74**	**$0.00**
	4	Administration	226	Grant Administration	Completed	CDBG	$54,760.42	$54,760.42	$0.00
		Project Total					**$54,760.42**	**$54,760.42**	**$0.00**
	5	Public Facilities	234	Dewey Boster Park Upgrades	Completed	CDBG	$99,845.00	$99,845.00	$0.00
			235	DuPont Lakes Basketball Renovation	Open	CDBG	$0.00	$0.00	$0.00
			236	Lake Butler Playground and Shade	Open	CDBG	$125,000.00	$59,237.21	$65,762.79
		Project Total					**$224,845.00**	**$159,082.21**	**$65,762.79**
	Program Total					**CDBG**	**$346,279.16**	**$280,516.37**	**$65,762.79**
	2015 Total						**$346,279.16**	**$280,516.37**	**$65,762.79**
Program Grand Total						**CDBG**	**$6,116,831.57**	**$6,051,068.78**	**$65,762.79**
Grand Total							**$6,116,831.57**	**$6,051,068.78**	**$65,762.79**

U.S. DEPARTMENT OF HOUSING AND
URBAN DEVELOPMENT
OFFICE OF COMMUNITY PLANNING AND
DEVELOPMENT
PR06 - Summary of Consolidated Plan
Projects for Report Year

DATE: 11/22/2016
TIME: 10:42:17 AM
PAGE: 1/1

IDIS

Plan Year	IDIS Project	Project Title and Description		Program	Project Estimate	Commited Amount	Amount Drawn Thru Report Year	Amount Available to Draw	Amount Drawn in Report Year
2015	1	Dewey O Boster Sports Complex	Dewey O Boster Sports Complex is one of the largest parks in the City of Deltona. The CDBG funds will be used to construct an additional practice field, create 120 additional parking spaces and install fencing for the resident's health and safety.	CDBG	$240,000.00	$0.00	$0.00	$0.00	$0.00
	2	Housing Rehabilitation	Housing repairs to owner-occupied homes of eligible low and moderate income households.	CDBG	$50,000.00	$0.00	$0.00	$0.00	$0.00
	3	Pubic Service	Eligible public service activities to benefit low and moderate income persons.	CDBG	$67,443.00	$66,673.74	$66,673.74	$0.00	$66,673.74
	4	Administration	City of Deltona will use the 20% maximum allocation to administer activities related to CDBG funded projects	CDBG	$89,925.00	$54,760.42	$54,760.42	$0.00	$54,760.42
	5	Public Facilities	Dewey O Boster Sports Complex is the largest park in Deltona and supports many large events hosted by the City of Deltona. The City's Fourth of July, Spooktacular and Eggstravaganza venues bring over 30,000 families. It is also serves as the main sports facility for the City accommodating youth baseball leagues (over 300 youths), Pop Warner Football leagues (over 300 youths) and Youth Soccer teams (over 600 youths). Upgrades will consist of removing an old wood fence in front of the park and adding an aluminum black picket fence. Gates will be replaced so cars are unable to drive onto the fields which will provide a level of safety for residents and participants. This will also enhance access. Clearing 2.4 acres of unused parkland and develop into two sections: the front part for irrigated green space which will be used for ball field expansion and the back part will be paved for additional parking. The field will be fenced with aluminum picket fencing, to address safety concerns. It is anticipated that the additional parking will accommodate up to 120 cars.	CDBG	$240,000.00	$224,845.00	$159,082.21	$65,762.79	$159,082.21
	6	Public Services	The City will continue to invest in residents by funding local public service entities and establishing relationships that provide a direct benefit for citizens	CDBG	$67,443.00	$0.00	$0.00	$0.00	$0.00
	7	Administration	Administration is used to help fund staff positions	CDBG	$89,925.00	$0.00	$0.00	$0.00	$0.00

U.S. Department of Housing and Urban Development
Office of Community Planning and Development
Integrated Disbursement and Information System
CDBG Housing Activities
DELTONA, FL

PGM YEAR	PROJ ID	IDIS ACT ID	ACTIVITY NAME	STATUS	MTX CD	NTL OBJ	Total EST. AMT	% CDBG	CDBG DRAWN AMOUNT	OCCUPIED TOTAL	UNITS L/M	% L/M	CUMULATIVE OCCUPIED OWNER	CUMULATIVE UNITS RENTER
2014	8092	221	702 Red Coach Avenue	COM	14A	LMH	60.00	100.0	60.00	1	1	100.0	1	0
2014	8092	222	952 Vercelli	OPEN	14A	LMH	285.00	0.0	285.00	0	0	0.0	0	0
2014	8092	223	1011 Marble Terrace	COM	14A	LMH	26,197.50	100.0	26,197.50	1	1	100.0	1	0
2014	8092	224	609 Nardello	OPEN	14A	LMH	60.00	0.0	60.00	0	0	0.0	0	0
			2014 TOTALS: BUDGETED/UNDERWAY				345.00	100.0	345.00	0	0	0.0	0	0
				COMPLETED			26,257.50	100.0	26,257.50	2	2	100.0	2	0
							26,602.50	100.0	26,602.50	2	2	100.0	2	0

PGM YEAR	PROJ ID	IDIS ACT ID	ACTIVITY NAME	STATUS	MTX CD	NTL OBJ	Total EST. AMT	% CDBG	CDBG DRAWN AMOUNT	OCCUPIED TOTAL	UNITS L/M	% L/M	CUMULATIVE OCCUPIED OWNER	CUMULATIVE UNITS RENTER
2013	0925	208	1347 Hayward Ave	COM	14A	LMH	24,864.25	100.0	24,864.25	1	1	100.0	1	0
			2013 TOTALS: BUDGETED/UNDERWAY				0.00	0.0	0.00	0	0	0.0	0	0
				COMPLETED			24,864.25	100.0	24,864.25	1	1	100.0	1	0
							24,864.25	100.0	24,864.25	1	1	100.0	1	0

PGM YEAR	PROJ ID	IDIS ACT ID	ACTIVITY NAME	STATUS	MTX CD	NTL OBJ	Total EST. AMT	% CDBG	CDBG DRAWN AMOUNT	OCCUPIED TOTAL	UNITS L/M	% L/M	CUMULATIVE OCCUPIED OWNER	CUMULATIVE UNITS RENTER
2012	8450	193	James Demaio	COM	14A	LMH	25,083.70	100.0	25,083.70	1	1	100.0	1	0
2012	8450	194	Carol Sellery	COM	14A	LMH	19,318.50	100.0	19,318.50	1	1	100.0	1	0
2012	8450	195	Francisco and Gloria Lopez	COM	14A	LMH	9,188.00	100.0	9,188.00	1	1	100.0	1	0

2012	TOTALS: BUDGETED/UNDERWAY	0.00	0.0	0.00	0	0	0.0	0	0
	COMPLETED	53,590.20	100.0	53,590.20	3	3	100.0	3	0
		53,590.20	100.0	53,590.20	3	3	100.0	3	0

PGM YEAR	PROJ ID	IDIS ACT ID	ACTIVITY NAME	STATUS	MTX CD	NTL OBJ	Total EST. AMT	% CDBG	CDBG DRAWN AMOUNT	OCCUPIED TOTAL	UNITS L/M	% L/M	CUMULATIVE OCCUPIED OWNER	CUMULATIVE UNITS RENTER
2011	7897	167	Doug Shippee	COM	14A	LMH	13,787.00	100.0	13,787.00	1	1	100.0	1	0
2011	7897	169	Aletha McGee home repairs	COM	14A	LMH	25,266.00	100.0	25,266.00	1	1	100.0	1	0
2011	7897	170	David Hughes home repairs	COM	14A	LMH	9,995.00	100.0	9,995.00	1	1	100.0	1	0
2011	7897	171	Lois Horton home repairs	COM	14A	LMH	9,704.00	100.0	9,704.00	1	1	100.0	1	0
2011	7897	172	Elva Adderley home repairs	COM	14A	LMH	17,495.00	100.0	17,495.00	1	1	100.0	1	0
2011	7897	173	Santana Servilio	COM	14A	LMH	25,126.78	100.0	25,126.78	1	1	100.0	1	0
2011	7897	174	Alba Vazquez	COM	14A	LMH	10,535.00	100.0	10,535.00	1	1	100.0	1	0
2011	TOTALS: BUDGETED/UNDERWAY						0.00	0.0	0.00	0	0	0.0	0	0
	COMPLETED						111,908.78	100.0	111,908.78	7	7	100.0	7	0
							111,908.78	100.0	111,908.78	7	7	100.0	7	0

PGM YEAR	PROJ ID	IDIS ACT ID	ACTIVITY NAME	STATUS	MTX CD	NTL OBJ	Total EST. AMT	% CDBG	CDBG DRAWN AMOUNT	OCCUPIED TOTAL	UNITS L/M	% L/M	CUMULATIVE OCCUPIED OWNER	CUMULATIVE UNITS RENTER
2010	2629	143	Beth Ojalvo/John Burggraf	COM	14A	LMH	7,490.00	100.0	7,490.00	1	1	100.0	1	0
2010	2630	145	Theresa Benke	COM	14A	LMH	159.61	100.0	159.61	1	1	100.0	1	0
2010	2630	146	Agnes Sulek	COM	14A	LMH	520.00	100.0	520.00	1	1	100.0	1	0
2010	TOTALS: BUDGETED/UNDERWAY						0.00	0.0	0.00	0	0	0.0	0	0
	COMPLETED						8,169.61	100.0	8,169.61	3	3	100.0	3	0
							8,169.61	100.0	8,169.61	3	3	100.0	3	0

PGM YEAR	PROJ ID	IDIS ACT ID	ACTIVITY NAME	STATUS	MTX CD	NTL OBJ	Total EST. AMT	% CDBG	CDBG DRAWN AMOUNT	OCCUPIED TOTAL	UNITS L/M	% L/M	CUMULATIVE OCCUPIED OWNER	CUMULATIVE UNITS RENTER
2009	7119	116	Minor Repair	COM	14A	LMH	25,774.04	100.0	25,774.04	4	4	100.0	4	0
2009	7119	127	Robinson-530 S. Floyd Circle	COM	14A	LMH	4,467.00	100.0	4,467.00	1	1	100.0	1	0
			2009 TOTALS: BUDGETED/UNDERWAY				0.00	0.0	0.00	0	0	0.0	0	0
			COMPLETED				30,241.04	100.0	30,241.04	5	5	100.0	5	0
							30,241.04	100.0	30,241.04	5	5	100.0	5	0

PGM YEAR	PROJ ID	IDIS ACT ID	ACTIVITY NAME	STATUS	MTX CD	NTL OBJ	Total EST. AMT	% CDBG	CDBG DRAWN AMOUNT	OCCUPIED TOTAL	UNITS L/M	% L/M	CUMULATIVE OCCUPIED OWNER	CUMULATIVE UNITS RENTER
2008	0007	99	WILLIAM ZINS	COM	14A	LMH	4,225.24	100.0	4,225.24	1	1	100.0	1	0
2008	0007	101	GONZALEZ, YODANNI	COM	14A	LMH	5,000.00	100.0	5,000.00	1	1	100.0	1	0
2008	0007	102	RODRIGUEZ, LUIS & MARITZA	COM	14A	LMH	5,000.00	100.0	5,000.00	1	1	100.0	1	0
			2008 TOTALS: BUDGETED/UNDERWAY				0.00	0.0	0.00	0	0	0.0	0	0
			COMPLETED				14,225.24	100.0	14,225.24	3	3	100.0	3	0
							14,225.24	100.0	14,225.24	3	3	100.0	3	0

PGM YEAR	PROJ ID	IDIS ACT ID	ACTIVITY NAME	STATUS	MTX CD	NTL OBJ	Total EST. AMT	% CDBG	CDBG DRAWN AMOUNT	OCCUPIED TOTAL	UNITS L/M	% L/M	CUMULATIVE OCCUPIED OWNER	CUMULATIVE UNITS RENTER
2007	0007	56	ZUNILDA SMITH	COM	14A	LMH	4,450.00	100.0	4,450.00	1	1	100.0	1	0
2007	0007	57	VIRGIL ACRE	COM	14A	LMH	4,518.72	100.0	4,518.72	1	1	100.0	1	0
2007	0007	58	MICHAEL BRODY	COM	14A	LMH	2,910.00	100.0	2,910.00	1	1	100.0	1	0
2007	0007	59	MICHELLE BROWN	COM	14A	LMH	4,860.00	100.0	4,860.00	1	1	100.0	1	0
2007	0007	60	JOANN GIBSON	COM	14A	LMH	1,988.93	100.0	1,988.93	1	1	100.0	1	0

2007	0007	61	MANUEL GUERRA	COM	14A	LMH	1,289.00	100.0	1,289.00	1	1	100.0	1	0
2007	0007	62	DEBORAH HUTCHINSON	COM	14A	LMH	5,000.00	100.0	5,000.00	1	1	100.0	1	0
2007	0007	63	CARLENE MORGAN	COM	14A	LMH	4,768.80	100.0	4,768.80	1	1	100.0	1	0
2007	0007	64	ALBERTO NARVAEZ	COM	14A	LMH	5,000.00	100.0	5,000.00	1	1	100.0	1	0
2007	0007	65	THEDA MITCHELL	COM	14A	LMH	5,000.00	100.0	5,000.00	1	1	100.0	1	0
2007	0007	66	ASHA YOUNG	COM	14A	LMH	600.00	100.0	600.00	1	1	100.0	1	0
2007	0007	67	DENISE PRECOPIO	COM	14A	LMH	5,000.00	100.0	5,000.00	1	1	100.0	1	0
2007	0007	68	CHARLOTTE HILLGOTH	COM	14A	LMH	5,000.00	100.0	5,000.00	1	1	100.0	1	0
2007	0007	69	RANDY TAYLOR-IRWIN	COM	14A	LMH	1,898.00	100.0	1,898.00	1	1	100.0	1	0
2007	0007	70	BIENVENIDO SANTIAGO	COM	14A	LMH	4,674.12	100.0	4,674.12	1	1	100.0	1	0
2007	0007	71	ISRAEL RAMOS	COM	14A	LMH	3,076.34	100.0	3,076.34	1	1	100.0	1	0
2007	0007	72	KENNETH DANIELS	COM	14A	LMH	249.00	100.0	249.00	1	1	100.0	1	0
2007	0007	73	JOESPH MALUCCI	COM	14A	LMH	4,037.12	100.0	4,037.12	1	1	100.0	1	0
2007	0007	74	ADRIAN MARTINEZ	COM	14A	LMH	1,250.00	100.0	1,250.00	1	1	100.0	1	0
2007	0007	75	ROBBIE RODRIGUEZ	COM	14A	LMH	359.86	100.0	359.86	1	1	100.0	1	0
2007	0007	81	SANDRA VALASQUEZ	COM	14A	LMH	5,000.00	100.0	5,000.00	1	1	100.0	1	0
2007	0007	82	RICHARD AND DEBORAH CARRIGAN	COM	14A	LMH	4,900.00	100.0	4,900.00	1	1	100.0	1	0
2007	0007	86	YVONNE HOOVER	COM	14A	LMH	5,000.00	100.0	5,000.00	1	1	100.0	1	0
2007	0007	87	MAURICE CUSSATT	COM	14A	LMH	478.00	100.0	478.00	1	1	100.0	1	0
2007	0007	88	NESTER RAMOS	COM	14A	LMH	4,663.63	100.0	4,663.63	1	1	100.0	1	0
			2007 TOTALS: BUDGETED/UNDERWAY				0.00	0.0	0.00	0	0	0.0	0	0
			COMPLETED				85,971.52	100.0	85,971.52	25	25	100.0	25	0
							85,971.52	100.0	85,971.52	25	25	100.0	25	0

PGM YEAR	PROJ ID	IDIS ACT ID	ACTIVITY NAME	STATUS	MTX CD	NTL OBJ	Total EST. AMT	% CDBG	CDBG DRAWN AMOUNT	OCCUPIED TOTAL	UNITS L/M	% L/M	CUMULATIVE OCCUPIED OWNER	CUMULATIVE UNITS RENTER
2004	0003	38	CASSANDRA ARNOLD	COM	14A	LMH	4,706.08	100.0	4,706.08	1	1	100.0	1	0

2004	TOTALS: BUDGETED/UNDERWAY	0.00	0.0	0.00	0	0	0.0	0	0
	COMPLETED	4,706.08	100.0	4,706.08	1	1	100.0	1	0
		4,706.08	100.0	4,706.08	1	1	100.0	1	0

PGM YEAR	PROJ ID	IDIS ACT ID	ACTIVITY NAME	STATUS	MTX CD	NTL OBJ	Total EST. AMT	% CDBG	DRAWN AMOUNT	CDBG OCCUPIED TOTAL	UNITS L/M	% L/M	CUMULATIVE OCCUPIED OWNER	CUMULATIVE UNITS RENTER
2003	0003	16	JOANN LOFFLER	COM	14A	LMH	3,805.00	100.0	3,805.00	1	1	100.0	0	1
2003	0003	17	ELENA TAYLOR	COM	14A	LMH	2,986.00	100.0	2,986.00	1	1	100.0	0	1
2003	0003	20	DEBORAH YORK	COM	14A	LMH	2,340.00	100.0	2,340.00	1	1	100.0	1	0
2003	0003	22	BONNIE MORTON	COM	14A	LMH	1,580.00	100.0	1,580.00	1	1	100.0	0	1
2003	0003	23	CARLOS RAMIRO	COM	14A	LMH	997.00	100.0	997.00	1	1	100.0	0	1
2003	0003	24	ADA DENNIS	COM	14A	LMH	4,956.28	100.0	4,956.28	1	1	100.0	0	1
2003	TOTALS: BUDGETED/UNDERWAY						0.00	0.0	0.00	0	0	0.0	0	0
	COMPLETED						16,664.28	100.0	16,664.28	6	6	100.0	1	5
							16,664.28	100.0	16,664.28	6	6	100.0	1	5

DELTONA

Count of CDBG Activities with Disbursements by Activity Group & Matrix Code

Activity Group	Activity Category	Open Count	Open Activities Disbursed	Completed Count	Completed Activities Disbursed	Program Year Count	Total Activities Disbursed
Housing	Rehab; Single-Unit Residential (14A)	2	$0.00	1	$225.00	3	$225.00
	Total Housing	2	$0.00	1	$225.00	3	$225.00
Public Facilities and Improvements	Parks, Recreational Facilities (03F)	1	$59,237.21	2	$108,646.25	3	$167,883.46
	Total Public Facilities and Improvements	1	$59,237.21	2	$108,646.25	3	$167,883.46
Public Services	Senior Services (05A)	0	$0.00	2	$11,000.00	2	$11,000.00
	Youth Services (05D)	0	$0.00	3	$16,635.00	3	$16,635.00
	Child Care Services (05L)	0	$0.00	2	$11,000.00	2	$11,000.00
	Health Services (05M)	0	$0.00	1	$8,653.74	1	$8,653.74
	Food Banks (05W)	0	$0.00	3	$19,385.00	3	$19,385.00
	Total Public Services	0	$0.00	11	$66,673.74	11	$66,673.74
General Administration and Planning	General Program Administration (21A)	0	$0.00	2	$54,760.42	2	$54,760.42
	Total General Administration and Planning	0	$0.00	2	$54,760.42	2	$54,760.42
Grand Total		3	$59,237.21	16	$230,305.41	19	$289,542.62

DELTONA

CDBG Sum of Actual Accomplishments by Activity Group and Accomplishment Type

Activity Group	Matrix Code	Accomplishment Type	Open Count	Completed Count	Program Year Totals
Housing	Rehab; Single-Unit Residential (14A)	Housing Units	0	1	1
	Total Housing		0	1	1
Public Facilities and Improvements	Parks, Recreational Facilities (03F)	Public Facilities	0	8,905	8,905
	Total Public Facilities and Improvements		0	8,905	8,905
Public Services	Senior Services (05A)	Persons	0	893	893
	Youth Services (05D)	Persons	0	377	377
	Child Care Services (05L)	Persons	0	441	441
	Health Services (05M)	Persons	0	197	197
	Food Banks (05W)	Persons	0	1,174	1,174
	Total Public Services		0	3,082	3,082
Grand Total			0	11,988	11,988

DELTONA

CDBG Beneficiaries by Racial / Ethnic Category

Housing-Non Housing	Race	Total Persons	Total Hispanic Persons	Total Households	Total Hispanic Households
Housing	White	0	0	1	0
	Total Housing	0	0	1	0
Non Housing	White	1,224	467	0	0
	Black/African American	336	19	0	0
	Asian	14	0	0	0
	American Indian/Alaskan Native	7	0	0	0
	Native Hawaiian/Other Pacific Islander	13	1	0	0
	American Indian/Alaskan Native & White	2	1	0	0
	Black/African American & White	17	4	0	0
	Amer. Indian/Alaskan Native & Black/African Amer.	3	0	0	0
	Other multi-racial	292	94	0	0
	Total Non Housing	1,908	586	0	0
Grand Total	White	2,111	935	1	0
	Black/African American	535	39	0	0
	Asian	31	0	0	0
	American Indian/Alaskan Native	8	0	0	0
	Native Hawaiian/Other Pacific Islander	15	1	0	0
	American Indian/Alaskan Native & White	2	1	0	0
	Asian & White	5	0	0	0
	Black/African American & White	42	4	0	0
	Amer. Indian/Alaskan Native & Black/African Amer.	4	0	0	0
	Other multi-racial	329	94	0	0
	Total Grand Total	3,082	1,074	1	0

DELTONA

CDBG Beneficiaries by Income Category

	Income Levels	Owner Occupied	Renter Occupied	Persons
Non Housing	Extremely Low (<=30%)	0	0	335
	Low (>30% and <=50%)	0	0	742
	Mod (>50% and <=80%)	0	0	172
	Total Low-Mod	0	0	1,249
	Non Low-Mod (>80%)	0	0	19
	Total Beneficiaries	0	0	1,268

PART I: SUMMARY OF CDBG RESOURCES	
01 UNEXPENDED CDBG FUNDS AT END OF PREVIOUS PROGRAM YEAR	348,311.84
02 ENTITLEMENT GRANT	449,626.00
03 SURPLUS URBAN RENEWAL	0.00
04 SECTION 108 GUARANTEED LOAN FUNDS	0.00
05 CURRENT YEAR PROGRAM INCOME	0.00
05a CURRENT YEAR SECTION 108 PROGRAM INCOME (FOR SI TYPE)	0.00
06 FUNDS RETURNED TO THE LINE-OF-CREDIT	0.00
06a FUNDS RETURNED TO THE LOCAL CDBG ACCOUNT	0.00
07 ADJUSTMENT TO COMPUTE TOTAL AVAILABLE	0.00
08 TOTAL AVAILABLE (SUM, LINES 01-07)	797,937.84
PART II: SUMMARY OF CDBG EXPENDITURES	
09 DISBURSEMENTS OTHER THAN SECTION 108 REPAYMENTS AND PLANNING/ADMINISTRATION	234,782.20
10 ADJUSTMENT TO COMPUTE TOTAL AMOUNT SUBJECT TO LOW/MOD BENEFIT	0.00
11 AMOUNT SUBJECT TO LOW/MOD BENEFIT (LINE 09 + LINE 10)	234,782.20
12 DISBURSED IN IDIS FOR PLANNING/ADMINISTRATION	54,760.42
13 DISBURSED IN IDIS FOR SECTION 108 REPAYMENTS	0.00
14 ADJUSTMENT TO COMPUTE TOTAL EXPENDITURES	0.00
15 TOTAL EXPENDITURES (SUM, LINES 11-14)	289,542.62
16 UNEXPENDED BALANCE (LINE 08 - LINE 15)	508,395.22
PART III: LOWMOD BENEFIT THIS REPORTING PERIOD	
17 EXPENDED FOR LOW/MOD HOUSING IN SPECIAL AREAS	0.00
18 EXPENDED FOR LOW/MOD MULTI-UNIT HOUSING	0.00
19 DISBURSED FOR OTHER LOW/MOD ACTIVITIES	234,782.20
20 ADJUSTMENT TO COMPUTE TOTAL LOW/MOD CREDIT	0.00
21 TOTAL LOW/MOD CREDIT (SUM, LINES 17-20)	234,782.20
22 PERCENT LOW/MOD CREDIT (LINE 21/LINE 11)	100.00%
LOW/MOD BENEFIT FOR MULTI-YEAR CERTIFICATIONS	
23 PROGRAM YEARS(PY) COVERED IN CERTIFICATION	PY: PY: PY:
24 CUMULATIVE NET EXPENDITURES SUBJECT TO LOW/MOD BENEFIT CALCULATION	0.00
25 CUMULATIVE EXPENDITURES BENEFITING LOW/MOD PERSONS	0.00
26 PERCENT BENEFIT TO LOW/MOD PERSONS (LINE 25/LINE 24)	0.00%
PART IV: PUBLIC SERVICE (PS) CAP CALCULATIONS	
27 DISBURSED IN IDIS FOR PUBLIC SERVICES	66,673.74
28 PS UNLIQUIDATED OBLIGATIONS AT END OF CURRENT PROGRAM YEAR	0.00
29 PS UNLIQUIDATED OBLIGATIONS AT END OF PREVIOUS PROGRAM YEAR	0.00
30 ADJUSTMENT TO COMPUTE TOTAL PS OBLIGATIONS	0.00
31 TOTAL PS OBLIGATIONS (LINE 27 + LINE 28 - LINE 29 + LINE 30)	66,673.74
32 ENTITLEMENT GRANT	449,626.00
33 PRIOR YEAR PROGRAM INCOME	0.00
34 ADJUSTMENT TO COMPUTE TOTAL SUBJECT TO PS CAP	0.00
35 TOTAL SUBJECT TO PS CAP (SUM, LINES 32-34)	449,626.00
36 PERCENT FUNDS OBLIGATED FOR PS ACTIVITIES (LINE 31/LINE 35)	14.83%
PART V: PLANNING AND ADMINISTRATION (PA) CAP	
37 DISBURSED IN IDIS FOR PLANNING/ADMINISTRATION	54,760.42
38 PA UNLIQUIDATED OBLIGATIONS AT END OF CURRENT PROGRAM YEAR	0.00
39 PA UNLIQUIDATED OBLIGATIONS AT END OF PREVIOUS PROGRAM YEAR	0.00
40 ADJUSTMENT TO COMPUTE TOTAL PA OBLIGATIONS	0.00
41 TOTAL PA OBLIGATIONS (LINE 37 + LINE 38 - LINE 39 +LINE 40)	54,760.42
42 ENTITLEMENT GRANT	449,626.00
43 CURRENT YEAR PROGRAM INCOME	0.00
44 ADJUSTMENT TO COMPUTE TOTAL SUBJECT TO PA CAP	0.00
45 TOTAL SUBJECT TO PA CAP (SUM, LINES 42-44)	449,626.00
46 PERCENT FUNDS OBLIGATED FOR PA ACTIVITIES (LINE 41/LINE 45)	12.18%

LINE 17 DETAIL: ACTIVITIES TO CONSIDER IN DETERMINING THE AMOUNT TO ENTER ON LINE 17

Report returned no data.

LINE 18 DETAIL: ACTIVITIES TO CONSIDER IN DETERMINING THE AMOUNT TO ENTER ON LINE 18

Report returned no data.

LINE 19 DETAIL: ACTIVITIES INCLUDED IN THE COMPUTATION OF LINE 19

Plan Year	IDIS Project	IDIS Activity	Voucher Number	Activity Name	Matrix Code	National Objective	Drawn Amount
2014	1	225	5908503	Campbell Park Basketball Court Resurfacing	03F	LMA	$8,801.25
2015	5	234	5981101	Dewey Boster Park Upgrades	03F	LMA	$99,845.00
2015	5	236	5968229	Lake Butler Playground and Shade	03F	LMA	$59,237.21
					03F	**Matrix Code**	**$167,883.46**
2015	3	229	5923396	Council on Aging - Senior Center	05A	LMC	$2,750.00
2015	3	229	5946213	Council on Aging - Senior Center	05A	LMC	$2,750.00
2015	3	229	5968229	Council on Aging - Senior Center	05A	LMC	$2,750.00
2015	3	229	5981101	Council on Aging - Senior Center	05A	LMC	$2,750.00
					05A	**Matrix Code**	**$11,000.00**
2015	3	228	5946213	05/06Futures/Take Stock in Children	05D	LMC	$9,375.00
2015	3	231	5923396	New Hope Human Services - Dream Mentoring	05D	LMC	$2,121.21
2015	3	231	5946213	New Hope Human Services - Dream Mentoring	05D	LMC	$2,853.58
2015	3	231	5981101	New Hope Human Services - Dream Mentoring	05D	LMC	$2,285.21
					05D	**Matrix Code**	**$16,635.00**
2015	3	227	5889919	Early Learning Coalition	05L	LMC	$941.70
2015	3	227	5908503	Early Learning Coalition	05L	LMC	$359.99
2015	3	227	5923396	Early Learning Coalition	05L	LMC	$1,218.50
2015	3	227	5946213	Early Learning Coalition	05L	LMC	$7,535.56
2015	3	227	5968229	Early Learning Coalition	05L	LMC	$944.25
					05L	**Matrix Code**	**$11,000.00**
2015	3	232	5946213	Healthy Start Family Place in Deltona	05M	LMC	$5,403.24
2015	3	232	5968229	Healthy Start Family Place in Deltona	05M	LMC	$1,524.36
2015	3	232	5981101	Healthy Start Family Place in Deltona	05M	LMC	$1,726.14
					05M	**Matrix Code**	**$8,653.74**
2015	3	230	5946213	Neighborhood Center of West Volusia, Inc.	05W	LMC	$6,131.24
2015	3	230	5968229	Neighborhood Center of West Volusia, Inc.	05W	LMC	$4,868.76
2015	3	233	5946213	Community Life Center - Hunger/Homeless Prevention	05W	LMC	$1,773.85
2015	3	233	5968229	Community Life Center - Hunger/Homeless Prevention	05W	LMC	$4,133.44
2015	3	233	5981101	Community Life Center - Hunger/Homeless Prevention	05W	LMC	$2,477.71
					05W	**Matrix Code**	**$19,385.00**
2014	3	223	5908503	1011 Marble Terrace	14A	LMH	$225.00
					14A	**Matrix Code**	**$225.00**
Total							**$234,782.20**

LINE 27 DETAIL: ACTIVITIES INCLUDED IN THE COMPUTATION OF LINE 27

Plan Year	IDIS Project	IDIS Activity	Voucher Number	Activity Name	Matrix Code	National Objective	Drawn Amount
2015	3	229	5923396	Council on Aging - Senior Center	05A	LMC	$2,750.00
2015	3	229	5946213	Council on Aging - Senior Center	05A	LMC	$2,750.00
2015	3	229	5968229	Council on Aging - Senior Center	05A	LMC	$2,750.00
2015	3	229	5981101	Council on Aging - Senior Center	05A	LMC	$2,750.00
					05A	**Matrix Code**	**$11,000.00**
2015	3	228	5946213	05/06Futures/Take Stock in Children	05D	LMC	$9,375.00
2015	3	231	5923396	New Hope Human Services - Dream Mentoring	05D	LMC	$2,121.21
2015	3	231	5946213	New Hope Human Services - Dream Mentoring	05D	LMC	$2,853.58

Plan Year	IDIS Project	IDIS Activity	Voucher Number	Activity Name	Matrix Code	National Objective	Drawn Amount
2015	3	231	5981101	New Hope Human Services - Dream Mentoring	05D	LMC	$2,285.21
					05D	**Matrix Code**	**$16,635.00**
2015	3	227	5889919	Early Learning Coalition	05L	LMC	$941.70
2015	3	227	5908503	Early Learning Coalition	05L	LMC	$359.99
2015	3	227	5923396	Early Learning Coalition	05L	LMC	$1,218.50
2015	3	227	5946213	Early Learning Coalition	05L	LMC	$7,535.56
2015	3	227	5968229	Early Learning Coalition	05L	LMC	$944.25
					05L	**Matrix Code**	**$11,000.00**
2015	3	232	5946213	Healthy Start Family Place in Deltona	05M	LMC	$5,403.24
2015	3	232	5968229	Healthy Start Family Place in Deltona	05M	LMC	$1,524.36
2015	3	232	5981101	Healthy Start Family Place in Deltona	05M	LMC	$1,726.14
					05M	**Matrix Code**	**$8,653.74**
2015	3	230	5946213	Neighborhood Center of West Volusia, Inc.	05W	LMC	$6,131.24
2015	3	230	5968229	Neighborhood Center of West Volusia, Inc.	05W	LMC	$4,868.76
2015	3	233	5946213	Community Life Center - Hunger/Homeless Prevention	05W	LMC	$1,773.85
2015	3	233	5968229	Community Life Center - Hunger/Homeless Prevention	05W	LMC	$4,133.44
2015	3	233	5981101	Community Life Center - Hunger/Homeless Prevention	05W	LMC	$2,477.71
					05W	**Matrix Code**	**$19,385.00**
Total							**$66,673.74**

LINE 37 DETAIL: ACTIVITIES INCLUDED IN THE COMPUTATION OF LINE 37

Plan Year	IDIS Project	IDIS Activity	Voucher Number	Activity Name	Matrix Code	National Objective	Drawn Amount
2015	4	226	5889919	Grant Administration	21A		$14,400.43
2015	4	226	5908503	Grant Administration	21A		$5,547.23
2015	4	226	5923396	Grant Administration	21A		$7,619.87
2015	4	226	5946213	Grant Administration	21A		$14,116.75
2015	4	226	5968229	Grant Administration	21A		$7,283.55
2015	4	226	5981101	Grant Administration	21A		$5,792.59
					21A	**Matrix Code**	**$54,760.42**
Total							**$54,760.42**

CDBG FINANCIAL SUMMARY ATTACHMENT PROGRAM YEAR 2014 (FY 2015-2016)

RECONCILIATION OF FUNDS

Unexpended balance shown on CAPER:			$508,395.22
Reconciling items:			
ADD:	LOC balance(s)	$	
	Funds requested/not received	$	
	Cash on Hand:	$	
DEDUCT:	Grantee CDBG liabilities	$	
	Subrecipients CDBG liabilities	$	
TOTAL RECONCILING BALANCE:			$508,395.22

CDBG liabilities consist of activities which have not been entered into IDIS

CALCULATION OF BALANCE OF UNPROGRAMMED FUNDS:

Funds available during report period		$ 797,937.84	
ADD:	Income expected but not yet realized	$_____	
	Subtotal		$797,938.84
DEDUCT:	Total budgeted amount	$346,279.16	
	Funds obligated to prior year	$ 9,026.25	
	Subtotal		$355,305.68
UNPROGRAMMED BALANCE:			$442,633.16